May 1, 1962 R. E. GITHENS, JR., ET AL 3,031,770

STRAND-TREATING APPARATUS

Filed Aug. 31, 1959 2 Sheets-Sheet 1

Fig. 1

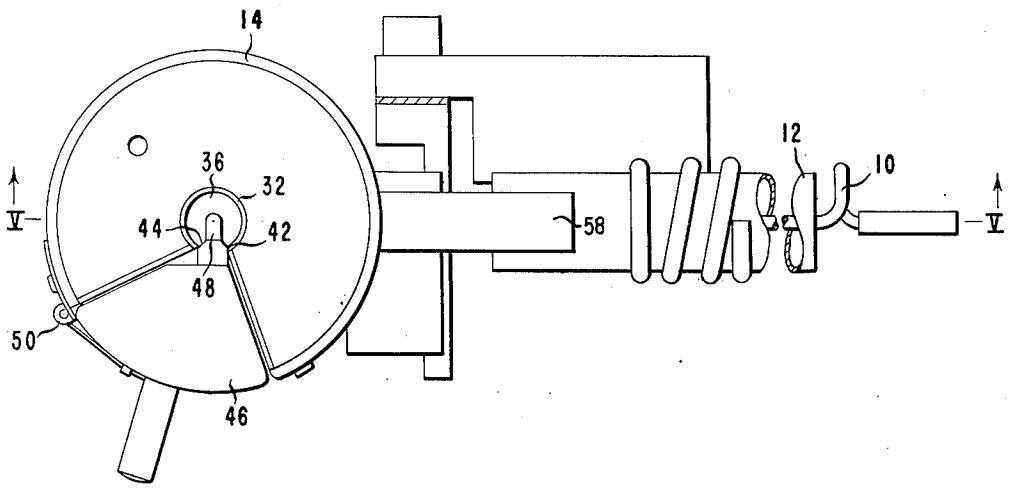


Fig. 2

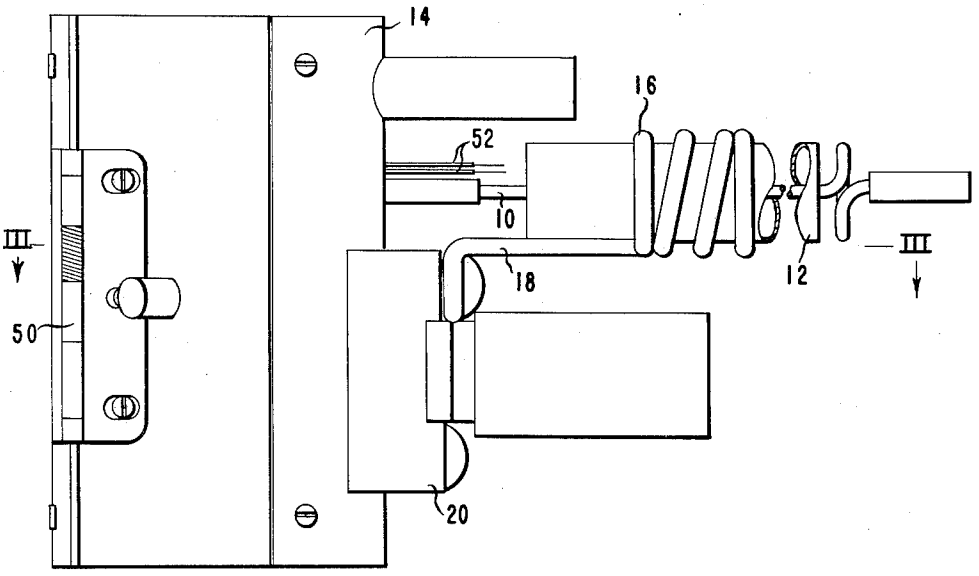

May 1, 1962 R. E. GITHENS, JR., ET AL 3,031,770

STRAND-TREATING APPARATUS

Filed Aug. 31, 1959 2 Sheets-Sheet 2

Fig. 3

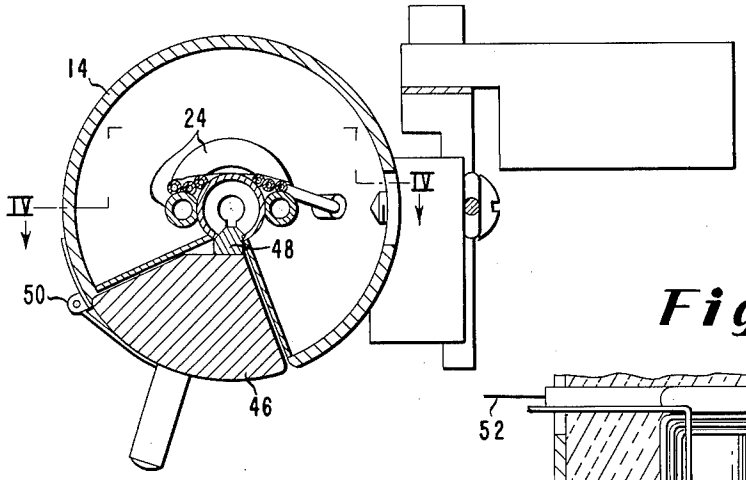


Fig. 4

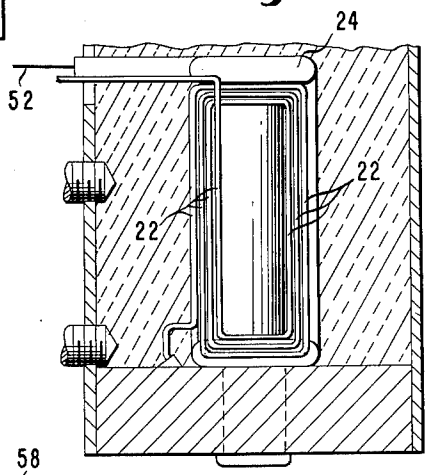


Fig. 5

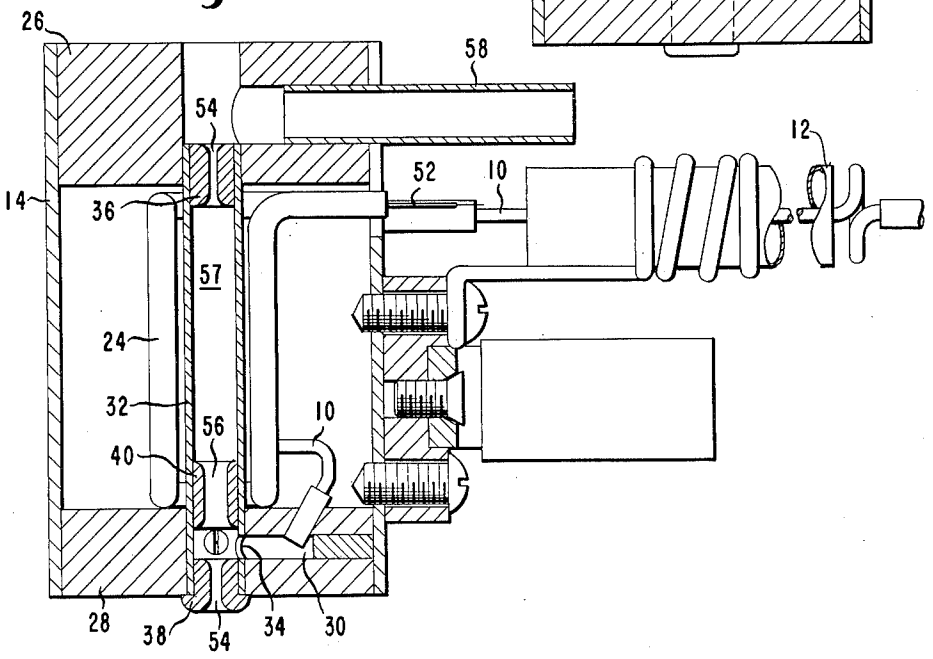

United States Patent Office 3,031,770 Patented May 1, 1962



3,031,770

# STRAND-TREATING APPARATUS

Richard E. Githens, Jr., and John R. Powers, Wilmington, Del., assignors to E. I. du Pont de Nemours and Company, Wilmington, Del., a corporation of Delaware

Filed Aug. 31, 1959, Ser. No. 837,264
9 Claims. (Cl. 34—68)

This invention relates to the production of textile fibers and, more particularly, to an apparatus for treating a running strand with superheated fluid.

A process for preparing freshly drawn nylon yarn which exhibits reduced residual shrinkage as well as a substantial improvement in intra-package uniformity is disclosed in Begnian Patent No. 567,997 to G. Pitzl. These improvements are accomplished by relaxing the freshly drawn yarn in a metered amount and then winding it onto a package under a controlled tension. This controlled relaxation process is quite attractive commercially since it represents the first practical solution to the problem of pirn taper barré and thus contributes to the production of fabrics which are essentially free from streaks, barré, and like defects. The yarn properties are even further improved by the combination of an abbreviated heat-setting step with the controlled relaxation step. Both process steps can be effected most readily in the presence of a superheated fluid.

The known apparatus for treating a running strand with superheated steam includes a tube through which the steam and the strand travel concurrently. These tubes suffer from numerous shortcomings such as the difficulty in stringing-up, alignment of the strand, irregular fluid consumption, and the like.

The general objective of the present invention is to provide an apparatus for treating a running strand of a thermoplastic yarn, such as polyhexamethylene adipamide or polyethylene terephthalate, with superheated fluid which apparatus achieves uniformity of intra- and interposition treating conditions and otherwise avoids the known disadvantages of the prior art.

The most important object of the present invention is to provide a strand-treating apparatus having interior heating means for simultaneously heating the strand passageway and the treating fluid and for providing an even temperature distribution through the strand-treating length of the apparatus.

A further object is the provision of a strand-treating apparatus which includes a tubular member having a lengthwise string-up slot, strand guides within the tubular member which have slots complemental to the string-up slot, and cooperating closure means for the slots.

With these and other objects in view, the apparatus of the present invention comprises generally an elongated tubular member through which the strand passes during the relaxing-setting process, a plurality of strand guides within the tubular member, a heating element in heat exchange relationship with the member, and a steam inlet tube passing in heat exchange relationship with the element and communicating with the interior of the tubular member intermediate a pair of the guides.

Other more minor objectives will become apparent in the following description wherein reference is made to the accompanying drawings.

In the drawings:

FIGURE 1 is a top plan view of the apparatus of the present invention;

FIG. 2 is an elevational view;

FIG. 3 is a transverse sectional view taken on line III—III of FIG. 2;



FIG. 4 is a partial vertical section taken on irregular line IV—IV of FIG. 3; and

FIG. 5 is a vertical sectional view taken on line V—V of FIG. 1.

Referring now to FIGS. 1 and 2, the illustrated apparatus includes a capillary tube 10 through which steam is forwarded from a source (not shown). Tube 10 passes through a heating jacket 12 which is supported from a cylindrical housing 14 by a spring 16 having its terminal portion 18 attached to a bracket 20. Tube 10 passes from jacket 12 to the interior of housing 14. Its spring mounting and a turn formed therein in advance of jacket 12 permit expansion and contraction of the tube relative to the housing, i.e., spring 16 is a flexible support which facilitates alignment of the assembly in such a manner as to prevent damage to capillary tube 10.

Referring now to FIGS. 3–5, it is seen that within housing 14 tube 10 is rebent upon itself to present opposed banks of substantially straight passes 22, each of which is in heat exchange relationship with a longitudinally extending heating element 24. Housing 14 is provided with a pair of end closures 26, 28 and tube 10 terminates in a conduit 30 in the closure 28. Conduit 30 communicates with a center tubular member 32 through an orifice 34. The elongated heating element 24 is formed intermediate its ends into a pair of semi-circular lengths and a pair of interconnecting straight lengths, all of which are closely adjacent and in heat exchange relationship with tubular member 32 and passes 22 of tube 10.

As best shown in FIG. 5, the elongated tubular member 32 is anchored at each end thereof in one of the closures 26, 28 and is provided internally with a pair of strand guides 36, 38. Spaced a short distance from guide 38 is a steam-throttling strand guide 40, through which steam from tube 10 passes to the interior, strand-treating passageway 57 within tubular member 32.

The means facilitating string-up of the apparatus is illustrated in FIGS. 1–3 wherein it is seen that the tubular member 32 is provided with a longitudinal slot 42 and that each of the three guides has an opening or slot 44 complemental to slot 42. The slots 42, 44 are normally closed by a wedge-shaped door 46 having an elongated slot-closing strip 48 thereon. Door 46 is hinged to housing 14, as at 50. The interior of housing 14 is normally filled with a suitable insulating material, such as unbonded glass wool. The insulating material has been shown in FIG. 4 only.

The apparatus of the present invention is placed in operation by the admission of steam to tube 10 and the actuation of switches which energize the electrical leads 52 of the resistance heating element 24, the latter being in heat exchange relationship with each pass 22 of tube 10 and with tubular member 32. The element 24 illustrated in the drawings consists of a resistance wire in a thermally conductive metal sheath and is of the type sold by the General Electric Company under the trademark "Calrod." String-up is accomplished by opening door 46 to permit location of a running strand in the passages 54, 56, 57. The slots are then closed off by returning door 46 to the position shown in FIG. 3, and steam enters the tubular member 32 through the passage 56 of guide 40. The steam has been superheated by the passage of tube 10 through jacket 12 and in close proximity to heating element 24. A sensing thermocouple (not shown) is provided within housing 14 for the purpose of controlling the application of power to the leads 52 of heating element 24. It should be noted that the passages 54 are slightly larger in diameter than the strand and that passage 56 is of a relatively larger diameter. Passage 56 controls the entering flow of steam, functioning as a throttle, and therefore controls the uniformity of conditions within passage-

way 57. Under certain conditions of strand size, speed, weight, shape and certain gas flow conditions, throttle 40 may be omitted. Steam is exhausted from member 32 through an exhaust conduit 58 which is maintained at less than atmospheric pressure by any suitable vacuum means (not shown).

The apparatus of the invention has utility in most textile operations involving the treatment of running yarn with superheated fluid. Such operations include the setting, relaxing, twisting, interlacing, and crimp setting of yarn. In addition to superheated steam, a wide variety of other fluids may be employed. The apparatus may be employed in conjunction with that which is used in drawing, twisting, plying, coning, winding, and other process steps. As mentioned previously, the apparatus has specific utility in a high speed draw-winding or draw-twisting operation which includes the relaxing and setting steps disclosed by Pitzl. By carrying out the relaxing-setting steps with a concentrated yet abrupt steam treatment, yarn degradation is substantially minimized. By the use of the disclosed apparatus, condensation problems are also minimized since the yarn passageway is essentially isolated and maintained at substantially the same temperature as the treating fluid.

It is apparent that many changes and modifications may be made in the disclosed strand-treating apparatus without departing from the spirit of the present invention which is therefore intended to be limited only by the scope of the appended claims.

We claim:

1. A strand-treating apparatus comprising: an elongated tubular member; a strand guide adjacent each end of the member, each of said guides having a strand passage therethrough; a heating element extending longitudinally of the member in heat exchange relationship therewith; and an elongated tube communicating at one of its ends with said tubular member at a point between said guides, said tube passing through a substantial portion of its length in heat exchange relationship with said heating element and being adapted for connection at its other end to a source of treating fluid.

2. The apparatus of claim 1 wherein said tubular member is provided with a longitudinal string-up slot and wherein each of said guides has an opening registering with the slot in said member and communicating with the passage therethrough.

3. The apparatus of claim 2 wherein closure means is provided for blocking the slot and said openings after string-up, said closure means being hingedly attached to said apparatus for movement to and from a blocking position.

4. An apparatus for treating a running strand with a heated fluid, said apparatus comprising: a cylindrical housing having end closures; a tubular member anchored at each end thereof in one of said end closures; a pair of spaced apart strand guides within said member, each guide having a strand passage extending axially of the member; a throttle guide within the member, proximal to one of said strand guides, said throttle guide having a passage therethrough of greater dimensions than the passages through said strand guides; a heating element in heat exchange relationship with said member; and an elongated tube passing through said housing and, through a substantial portion of its length, in heat exchange relationship with said heating element, said tube communicating with said member between said one guide and the throttle guide and being adapted for connection, exteriorly of said housing, to a source of heated fluid.

5. The apparatus of claim 4 wherein the housing, member and guides are each provided with a longitudinal string-up slot.

6. The apparatus of claim 5 wherein closure means is provided for blocking said slots after string-up, said closure means being hingedly attached to said housing for movement to and from a blocking position.

7. The apparatus of claim 4 further comprising a heating jacket and means supporting the jacket externally of the housing, said tube passing through said jacket to said housing.

8. The apparatus of claim 7 wherein said jacket is elongated and cylindrical and wherein said supporting means comprises a coil spring surrounding said jacket, said spring having a terminal portion attached to said housing.

9. The apparatus of claim 4 wherein the interior of said housing is filled with insulation material.

**References Cited** in the file of this patent

UNITED STATES PATENTS

| | | |
|---|---|---|
| 2,298,803 | Morris | Oct. 13, 1942 |
| 2,468,081 | Koster | Apr. 26, 1949 |
| 2,509,279 | Sisson | May 30, 1950 |
| 2,548,043 | Oberly | Jan. 29, 1952 |
| 2,586,800 | Elvin et al. | Feb. 26, 1952 |
| 2,906,205 | Speers | Sept. 29, 1959 |