(19) Europäisches Patentamt
European Patent Office
Office européen des brevets

(11) EP 0 561 256 B1

(12) **EUROPEAN PATENT SPECIFICATION**

(45) Date of publication and mention of the grant of the patent:
11.07.2001 Bulletin 2001/28

(51) Int Cl.[7]: **D21F 5/18**, F26B 13/10

(21) Application number: **93103768.3**

(22) Date of filing: **09.03.1993**

(54) **Method for contact-free air-drying of a material web and air dryer that makes use of the method**

Verfahren zum Lufttrocknen von freigeführten Materialbahnen and Lufttrockner zur Durchführung des Verfahrens

Procédé pour le séchage sans contact par air chaud d'une bande et séchoir utilisant le procédé

(84) Designated Contracting States:
AT CH DE ES FR GB IT LI PT SE

(30) Priority: **19.03.1992 FI 921193**

(43) Date of publication of application:
22.09.1993 Bulletin 1993/38

(73) Proprietor: **Metso Paper, Inc.**
00130 Helsinki (FI)

(72) Inventors:
- **Heikkilä, Pertti**
  SF-21260 Raisio (FI)
- **Jokioinen, Iikka**
  SF-21420 Lieto (FI)

(74) Representative: **Tiedtke, Harro, Dipl.-Ing. et al**
Patentanwaltsbüro
Tiedtke-Bühling-Kinne & Partner
Bavariaring 4
80336 München (DE)

(56) References cited:
EP-A- 0 195 757
EP-A- 0 298 299
WO-A-88/08950
DE-B- 1 143 474
US-A- 3 272 415
US-A- 3 982 328

Note: Within nine months from the publication of the mention of the grant of the European patent, any person may give notice to the European Patent Office of opposition to the European patent granted. Notice of opposition shall be filed in a written reasoned statement. It shall not be deemed to have been filed until the opposition fee has been paid. (Art. 99(1) European Patent Convention).

EP 0 561 256 B1

Description

[0001] The present invention relates to a method of drying material webs in an air dryer according to the preamble of claim 1 and to an air dryer for drying a material web according to the preamble of claim 9.

[0002] In through-dryers in paper and pulp industry, blow boxes are commonly used whose nozzle-carrier face consists of a plane plate, into which blow holes have been punched. Such nozzles are placed either at one side or at both sides of the airborne web to be dried. The nozzle-carrier-face commonly includes a number of rows of holes, one row after the other in the running direction of the web. The blow air flows in the space between the web and the nozzle-carrier-face, and the blow air is collected away through suction slots placed between the nozzle boxes.

[0003] In the prior-art direct-blow nozzle boxes of air dryers for paper, board or pulp web, in which boxes the blowing of air is directed perpendicularly to the material web to be dried, a well-known problem is the lateral flow of the consumed air between the web to be dried and the nozzle-carrier-face. Above and in the following, the term "lateral flow" is understood as meaning air flows parallel to the plane of the carrier face and of the web, which flows are additionally parallel to or opposite to the running direction of the web. Since the air must escape from the treatment gap, a lateral flow cannot be avoided. Said lateral flow deteriorates the transfer of heat in the prior-art blow-nozzle boxes, and the disturbing effect is increased with an increase in the velocity of the exhaust-air flow. Further, the loss of pressure produced by the blow box is increased when the velocity increases in the lateral flow. On the other hand, in view of the runnability of the web to be dried, in the blow box, it is preferable to make use of the lateral flow by shaping the blow face and the geometry of its nozzle openings such that, on the carrier face of the blow box, a zone of negative pressure is formed, which stabilizes the run of the web and by whose means a stable and unstrained run of the web is ensured.

[0004] With respect to the prior art most closely related to the present invention, reference is made to the SE-A-8,106,152 of Messrs. Fläkt AB (equiv. US-A-4,505,053) as well as to the WO-A-88/08950 of K. Krieger (equiv. US-A-5,016,363).

[0005] More specifically, in the above-mentioned WO-A-88/08950 a generic method of air-drying material webs is disclosed, in which method air jets substantially parallel to the plane of the web are applied to the web to be dried from underneath the web, by means of which air jets heat is transferred to the web, the web is supported by air free of contact and the run of the web is stabilized, wherein the air jets are applied from a nozzle-carrier face facing the web in opposite directions from the middle portion of the nozzle carrier face.

[0006] The nozzle carrier face comprises in the middle thereof a substantially V-section groove transverse to the running direction of the web, which groove is opened towards the web and in whose opposite walls there are series of nozzle holes, and in which nozzle-carrier face, at both sides of the groove, there are provided plane portions placed in the same plane parallel to the plane of the web and curved guide faces joining the walls of the groove to the plane portions, so that, by Coanda effect, the air jets applied from the series of nozzle holes towards the opposite wall of the groove are turned over a certain angle to make them substantially parallel to the plane portions and parallel to the plane of the web.

[0007] According to the document DE-B-11 43 474 another method of air-drying material webs is known which aims at achieving high drying rates and a stabilized run of the web. According to this method, the nozzle-carrier face of the nozzle-blow-box has a plurality of nozzles provided in the middle portion of the nozzle-carrier face and the slanted lateral portions thereof. According to one embodiment of this known method, the nozzles may be formed in such a manner in order to provide air jets in an oblique direction to the web; by means of this arrangement, a guiding effect is to be achieved.

[0008] The aim of the present invention is further development of the prior-art nozzle-blow-boxes disclosed in said patents while avoiding the drawbacks which are present in them and which will be described in more detail later.

[0009] In the blow boxes described in said SE patent, triangular openings, so-called "fish eyes", have been punched into their plane nozzle-carrier-face, at which openings the front edge, i.e. the base of the triangle, has sharp edges. A sharp edge is not a major drawback as long as the amount of air discharged out of the nozzle is sufficient. At times, the amount of air received by the nozzle may be reduced considerably from the dimensioned value, for example, if the filters for drying air are blocked, in which case the web starts reaching contact with the nozzle face. It has been noticed that said sharp edges plane material out of the face of, e.g., a pulp web, in which case both the quality of the finished product is deteriorated and rubbish remains in the dryer. On the other hand, the rubbish disturbs the threading of the pulp web. Formation of a "cigar" is spoken of, for the material detached out of the face of the pulp web by planing forms a roll resembling the structure of a cigar.

[0010] The present invention is above all related to the nozzle-blow-boxes employed in pulp dryers, in which the web runs above the nozzle and carrier faces of the boxes. The function of the air blowings is both to transfer heat from the blown air to the web and to support the web free of contact. In view of the runnability of the web, it is preferable to blow part of the air parallel to the plane of the nozzle, in which case the web is stabilized at a distance of 3...6 mm from the carrier face. In such a case, however, in the prior-art nozzle-blow-boxes, the velocity of the exhaust air in the space between the web and the nozzle becomes high. This results in

deterioration of the transfer of heat and in extra pressure losses. The detrimental effect of the high velocity of the exhaust air can be reduced by making the nozzles sufficiently narrow, but then the number of the nozzles becomes so high that the cost of manufacture of the dryer is increased substantially.

[0011] An object of the present invention is to provide a novel method and a novel nozzle-blow-box construction by whose means it is possible to avoid the drawbacks discussed above and to improve the transfer of heat from the drying air to the airborne web to be dried. Said improvement of the transfer of heat can be utilized most efficiently in the form of smaller size of the dryer. In this way, the cost of construction, e.g., of a pulp dryer and the cost of the machine hall can be lowered decisively.

[0012] An aim of the present invention is to reduce the effect of deteriorating of the transfer of heat by the lateral flow while the run of the web is stabilized by means of said flow.

[0013] The above-stated object is achieved by means of the features defined in claim 1. Preferred embodiments of the method of drying material webs according to claim 1 are set forth in the dependent claims 2 to 8, respectively. The above-stated object is also achieved by means of the features defined in claim 9. Preferred embodiments of the air dryer for drying a material web are set forth in the dependent claims 10 to 16, respectively.

[0014] According to one aspect of the method of the invention, in order to improve the transfer of heat in comparison with a plane carrier face, the air flow velocity parallel to the plane of the web to be dried and air-supported in connection with the nozzle-carrier face is initially kept substantially invariable, whereupon the air flow velocity is lowered in the lateral areas of said carrier face by employing lateral areas of the nozzle-carrier face that become rampwise and/or stepwise lower in the air-flow direction.

[0015] According to one aspect of the nozzle-blow-box of the air dryer in accordance with the invention, extensions of said nozzle-carrier-face portions are constituted by stepwise and/or ramp-shaped carrier-face portions placed further apart from the material web to be supported, in the area of which carrier-face portions the velocities of said support and stabilization air flows, as compared with the velocity prevailing in connection with the plane nozzle-carrier-face portions, are lowered, and that the nozzle-carrier face is provided with nozzle perforations, through which additional blowings substantially perpendicular to the plane of the material web to be supported can be applied from the nozzle-blow-box.

[0016] By means of the invention, the effect of deteriorating of the transfer of heat by the lateral flow has been minimized by lowering the lateral portions of the nozzle to a level lower than the plane middle portion, whereby the velocity of the lateral flow is lowered. Moreover, the lateral flows are preferably directed so that they do not directly collide against the air jets of the direct blowing on the plane face or on the lowered lateral portions.

[0017] The lowering of the lateral areas of the nozzle-carrier-face portions in accordance with the invention is based on the idea that a high flow velocity of the exhaust air between the web and the nozzle-carrier face deteriorates the coefficient of heat transfer. The lower the space between the web and the nozzle-carrier face, the higher becomes the velocity of the exhaust air. The velocity of the exhaust air is increased in both directions from the centre line of the nozzles towards the edges when more air is introduced. When the lateral areas of the nozzle-carrier-face are lowered in accordance with the present invention, the flow velocity in this area is lowered.

[0018] The nozzle-blow-box in accordance with the invention is a combination of a nozzle with positive/negative pressure, in which the magnitude of the lateral flow that produces the negative pressure is chosen appropriately in relation to the amount of air in the direct blowing.

[0019] It is characteristic of the hole-nozzle field in accordance with the invention in the carrier face that, with the very little nozzle-to-web distances with which the nozzles of the present invention operate, the coefficient of heat transfer is not essentially dependent on the distance, provided that the exhaust air does not disturb the air jets blown out of the nozzle holes to a significant extent. On the other hand, it is well known that, when there are several rows of nozzle holes, one row after the other, the air discharged out of the nozzles must pass towards the edges in the space between the nozzle and the web, and the higher this flow velocity is, the more does it disturb the air jets blown out of the holes and the more does it deteriorate the coefficient of heat transfer.

[0020] In a preferred embodiment of the nozzle-blow-box in accordance with the invention, from the walls of a V-section groove placed in the middle of the nozzle face, air jets are directed, crosswise in relation to one another, at continuous rounding points between the plane carrier face placed at each side of the walls of said V-section groove. As the air jets are tangential to the rounding points, they turn and become parallel to the plane portions of the carrier face by the Coanda effect. Between the web and the carrier faces, in accordance with the Bernoulli principle, a zone of negative pressure is formed, which stabilizes the web at a certain distance from the carrier face, as a rule, of an order of 3...6 mm. Also on the horizontal part of the carrier face, in the invention, attempts are made to avoid direct collisions between the jets of direct blowing and the air jets that flow in the lateral direction.

[0021] According to the invention, the lateral areas of the nozzle-carrier face of the nozzle-blow-box have been lowered so that the velocity of the lateral flow is lowered as the cross-sectional flow area becomes larger, whereby the heat-transfer effect of the blow jets com-

ing from the holes of direct blowing placed in the lowered inclined and/or straight nozzle-carrier-face portion is improved.

[0022] The nozzle-blow-box in accordance with the invention is suitable for use for drying of the web both in one-sized/two-sided drying, in the case of low-grammage webs (< 200 g/sq.m), and both underneath and above the web. In the case of heavy webs, such as pulp webs, the nozzle-blow-boxes in accordance with the invention are best suitable for lower nozzles together with direct-blow boxes that operate as upper nozzles, or alone as lower nozzle boxes in one-sided drying.

[0023] A further advantage that is achieved by means of the geometry of the blow-carrier faces of the nozzle-blow-boxes in accordance with the invention is a smooth blow face with no sharp edges, as the air of the lateral flow is introduced out of the central V-section groove while guided by rounded faces.

[0024] Since, according to the invention, as is indicated by measurements that have been carried out and that will be described in more detail later, the transfer of heat to the web can be improved by about 5...10 %, this improvement can be taken to useful use immediately in the form of reduced size of the dryer, which lowers the cost of investment of the dryer and of the machine hall substantially, and which also, indirectly, reduces the number of production interruptions and improves the operating time ratio of the dryer. The advantages mentioned above are particularly important in the case of large and complicated pulp dryers.

[0025] In a nozzle-blow-box in accordance with the invention, when a V-section groove is used in the middle of its carrier face, through which groove the blowings parallel to the carrier face are applied crosswise, in addition to a favourable blow/heat-transfer technique, a rigid mechanical construction is obtained, in which the V-section groove rigidifies the nozzle-carrier-face efficiently without any other rigidifying structures, which would be necessary otherwise.

[0026] It is a minor drawback of the blow face of the blow box in accordance with the invention that it is somewhat more difficult to manufacture than a uniform plane face. This drawback can, however, be solved by means of development of the manufacturing technology.

[0027] In the following, the invention will be described in detail with reference to some preferred embodiments of the invention illustrated in the figures in the accompanying drawings and to test results related to said embodiments.

[0028] Figure 1 is a schematic vertical sectional view in the machine direction of a pulp dryer that makes use of the method and of a set of nozzle-blow-boxes in accordance with the invention.

[0029] Figure 2 is an axonometric view of the modular construction of a pulp dryer that makes use of the method and of a set of nozzle-blow-boxes of the invention.

[0030] Figure 3 is a schematic vertical sectional view in the machine direction of a set of nozzle-blow-boxes in accordance with the invention and of a set of boxes of direct blowing placed above said set of boxes.

[0031] Figure 4 is an axonometric illustration of a nozzle-blow-box in accordance with the invention and of the principle of its blowings.

[0032] Figure 5 is an axonometric view of the construction of an upper direct-blow box.

[0033] Figure 6 shows an embodiment of a carrier face of a nozzle-blow-box in accordance with the invention and of the blow nozzles of said carrier face in more detail, together with the most important parameters of dimensioning.

[0034] Figures 7A, 7B, 7C, 7D, and 7E illustrate different variations of different embodiments and dimensions of bevel and step formations of the nozzle-carrier faces of a nozzle-blow-box in accordance with the invention and of a nozzle-blow-box of reference.

[0035] Figure 8A shows a nozzle-blow-box as shown in Figs. 4 or 5, seen from the side of the nozzle-carrier face.

[0036] Figure 8B is an enlarged schematic vertical sectional view in the machine direction of a preferred geometry and dimensioning of the V-section groove of the nozzle.

[0037] Figure 9 illustrates different relative coefficients of heat transfer in the cases illustrated in Figs. 7A to 7E as a function of the distance of the web at a first air-blow velocity.

[0038] Figure 10 illustrates the corresponding measurement results in a way corresponding to Fig. 9, at a second, higher air-blow velocity.

[0039] Fig. 1 is a schematic vertical sectional view in the machine direction of a pulp dryer that makes use of the method and of a set of nozzle-blow-boxes in accordance with the invention. The dryer comprises a closed hood 12, in whose interior there is a set of nozzle-blow-boxes 30 in accordance with the invention and, placed facing said set of boxes, a set of boxes 40 of direct blowing, the web W to be dried being passed through the treatment gaps 25 formed by said sets of boxes as supported by air free of contact. The pulp web W_m or equivalent that is passed into the dryer is passed through the wet press 10 and over the roll 11 for regulation of the tension of the web, through an inlet opening 12a, into the hood 12, in which the web W to be dried runs as horizontal draws back and forth, being guided by guide rolls 13. The dried web W is removed through an outlet opening 12b placed in the bottom part of the hood 12, being passed by the intermediate of an alignment roll 14 through a set of drive rolls 15 further (W_{out}). In Fig. 1, the path of the web threading belt or rope is illustrated by the reference numeral 16 and by the dashed-dotted line.

[0040] In Fig. 1, the circulation of drying air taking place inside the hood 12 is illustrated schematically by means of arrows $A_1...A_2$. The arrows A, and the air ducts 17 placed in connection with them represent the introduction of replacement air from the heat recovery, and

the arrows A_2 and the air ducts 18 placed in connection with them represent the passage of the exhaust air to the heat recovery.

[0041] Fig. 2 illustrates the modular construction of a pulp dryer that makes use of the method and of a nozzle-blow-box in accordance with the invention and whose basic principle is, e.g., similar to that illustrated in Fig. 1. The dryer-blower module comprises blower towers 21 and blowers, which are provided with blade wheels 22. The module construction comprises heating radiators 24, through which the blow air is passed into the gap between the upper nozzles and the lower nozzles, i.e. into the web gap 25. Further, the module construction includes air filters 26. At the operating side of the blower module, there is a tending bridge 28, in connection with which there are servicing gates 27 for the blower motors and servicing doors 29 for the blower modules. Fig. 2 shows the circulation of the drying air as illustrated by the arrows, and also the nozzle-blow-boxes 30,40 in accordance with the invention and the web gaps 25 between them.

[0042] With respect to Figs. 1 and 2, it is to be emphasized that, above, they have been described just as one field of application of the method and of the set of nozzle-blow-boxes 30,40 in accordance with the invention and that the method and the set of nozzle-blow-boxes 30,40 in accordance with the invention can also be applied in a great number of other environments and also in other than pulp dryers, for example in board and paper-web dryers, even though the pulp dryers are the most advantageous and primary field of application of the invention, in which several different advantages of the invention are best used for a useful purpose.

[0043] Fig. 3 is a schematic illustration of a set of nozzle-blow-boxes 30 in accordance with the invention and of an opposite set of boxes 40 of direct blowing. In the following, the shorter name "lower box" will be used for the nozzle-blow-boxes 30, because they are preferably placed underneath the horizontally running web W. Between the lower boxes 30, there are free spaces 30a, and, in a corresponding way, between the direct-blow boxes 40, there are free spaces 40a. Through the spaces 30a and 40a, the blow air is passed further through the heating radiators 24 shown in Fig. 2, being carried by the blower 22, back to the blow boxes. As is shown in Fig. 3, the web W to be dried, typically a pulp web, runs as a horizontal run through the web gap 25. The web gap 25 is defined from below by the lower boxes 30, which are placed as uniformly spaced in one horizontal plane, and from above by the direct-blow boxes 40, which are placed as uniformly spaced in a horizontal plane. On the blow boxes 30, the web W, which is usually heavy (the weight of a wet pulp web may be up to ~2000 g/sq.m), is supported by means of the blowings B2 and B3. Through the nozzle holes 42 placed in the horizontal lower walls of the direct-blow boxes 40, blowings B_1 perpendicular to the plane of the web W are applied to the web W, the web W being dried from above by means of said blowings B,.

[0044] Figs. 4, 6, and 8A and 8B illustrate the construction of the lower boxes 30 in more detail. In the middle of the carrier face 31 of the lower boxes, there is a transverse groove 32, i.e. a groove 32 passing across the width of the web W, which groove is opened towards the web W. The opening angle of the V-section groove 32 is denoted with a. Said angle a is, as a rule, in a range of a = 50°...90°, preferably a = 60°...80°. The inclined walls of the V-section groove 32, which walls are preferably plane, turn and join the horizontal plane portion 34 of the carrier face at an angle b by the intermediate of rounded portions 31b with a curve radius R. As can be seen directly from Fig. 6, between the angles a and b, there is a relationship a + 2b = 180°. Both of the inclined plane faces of the V-section groove 32 have rows of blow holes 33. These blow holes 33 are placed and directed so that the air jets B_3 coming from them are tangential to the rounded portions 31b between the plane faces, said rounded portions turning the air jets B_3, by the Coanda effect, onto the plane portions 34 of the carrier face 31 and making the jets parallel to said plane portions. The blow holes 33 are placed in the opposite sides of the V-section groove 32 as fitted in such a way staggered in relation to one another (Fig. 8) that the blowings B_3 are interlocked with one another crosswise in opposite directions. Thus, one set of the blowings B_3 is parallel to the running direction of the web W and to its plane, whereas the other set of the blowings is parallel to the plane of the web W but of a direction opposite to the running direction of the web W. In accordance with the Bernoulli principle, the blowings B, induce a zone of negative pressure between the web W and the carrier face 31, which zone stabilizes the web W at a certain distance H from the carrier face 31. Said distance H is, as a rule, of an order of H = 3...6 mm, in which case the air drying of the web W is, as a rule, most efficient.

[0045] In both of the lateral areas of the carrier face 31, over its length L_1 in the direction of the web, lowered lateral portions 35 are placed, whose height in relation to the web W is lower than the height of the middle-plane portions 34 of the carrier face 31. According to Fig. 6, said lateral portions 35 are inclined plane bevel parts, whose distance in relation to the plane parts 34 at the edges of the nozzle box 30 is denoted with h_2.

[0046] In the nozzle-blow-box in accordance with the invention, in the web W treatment gap *25,* underneath the web W, the air velocity is first substantially invariable in connection with the plane carrier-face portions 34, whereupon the air velocity is lowered in connection with the carrier-face portions 35;35b,35d,35e stepwise or continuously when moving towards the edges of the box 30 and towards the spaces 30a in the treatment gap *25.* Hereby the transfer of heat can be intensified considerably, as will come out later from the test results illustrated in Figs. 9 and 10. The intensification of the transfer of heat comes largely from the fact that, on the lowered

carrier-face portions 35;35b;35d;35e, the air-flow velocity parallel to the plane of the web W is lowered considerably, which intensifies above all the heat transfer of the direct blowings B_2.

[0047] In a pulp dryer, the lower box 30 and the direct-blow box 40 as shown in Figs. 4 and 5 are placed one above the other and one facing the other, so that the faces 41 and 31 are substantially parallel to one another and, as a rule, horizontal. At the edges of the faces 41 of the direct-blow boxes 40, there may be rounded portions 43, and at the edges of the carrier faces 31 of the lower boxes 30, there may be corresponding rounded portions 31a.

[0048] The opposite faces 31 and 41 on the lower box 30 and on the direct-blow box 40 are provided with nozzle perforations 42;36. A preferred distribution of the perforations 36 on the blow box 30 comes out from Fig. 8. Through said perforations 36;42, perpendicular blowings B_1;B_2 are directed against the web W, the drying of the web W being promoted by means of said blowings. As the air-flow velocity is lowered on the carrier-face portions 35 because of an increased cross-sectional flow area, the direct blowings B_2 will have a longer time of effect on the lower face of the web W.

[0049] Fig. 8B is a schematic illustration of a preferred embodiment of the geometry and of a dimensioning example of the V-section groove 32 described above. The geometry shown in Fig. 8B is symmetric in relation to the transverse vertical centre plane K-K. It is the starting point of the design of the V-section groove 32 that the air jets F, and F_2 blown from the opposite sides can be made tangential to the rounded portions 31b connected with the edges of the groove 32 so that, by the Coanda effect, said air jets turn and become parallel to the carrier face 34. The area between the groove 33 and the carrier face 34 must be expressly rounded in such a way that the air starts following the carrier face 34.

[0050] Figs. 7A...7E show some alternative embodiments of the carrier face of the blow box 30. The nozzle box 30A as shown in Fig. 7A comprises a carrier face 31, in which there are plane portions 34 at both sides of the V-section groove 32 and, after them, plane inclined bevel portions 35.

[0051] Fig. 7B shows a particularly advantageous blow box 30B, in which, at both sides of the V-section groove 32, there are plane portions 34b of the carrier face and, after them, step portions 37, which are perpendicular both to the first plane portions 34b of the carrier face and to the plane portions 35b of the carrier face that follow after the step portion 37. The initial parts 34b of the carrier face 31 are parallel to one another and in the same horizontal plane. In a corresponding way, the lateral portions of the carrier face 31 are parallel to one another and in the same horizontal plane. Fig. 7B also shows a preferred dimensioning example of the nozzle box 30B. According to Fig. 7B, the height h_2 of the step portion 37 is h_2 = 10 mm. As a rule, the height of the step portion may vary in a range of h_2 = 7...15 mm.

[0052] In Fig. 7C, a nozzle box 30C is illustrated as a reference, which box has a fully plane carrier face 31c. Properly speaking, this nozzle box 30C is not in accordance with the present invention, and it is illustrated in this connection for the sake of reference only, the results of said comparison coming out from Figs. 9 and 10, which will be described in more detail later.

[0053] Fig. 7D illustrates a blow box 30D in accordance with the invention, which box has relatively long plane carrier-face portions 34d and relatively short and steep, inclined lateral portions 35d. In Fig. 7D, a preferred dimensioning example is also given.

[0054] In Fig. 7E, an alternative modification of the blow box as shown in Fig. 7B is illustrated, which modification has relatively long plane carrier-face portions 34e and step portions 37, which are followed by relatively short carrier-face portions 35e. Fig. 7E also shows an example of the construction of said blow box 30E.

[0055] Fig. 8A shows the relative locations and staggering of the nozzle holes 33 in the V-section groove 32 so that the blowings B_3 of opposite directions are blown crosswise. The perforations 36 in the nozzle-carrier face 31 are placed in four lines, one line after the other, as staggered in such a way that the blowings B_2 and B_3 neither meet each other nor disturb each other. The mutual spacing of the nozzle holes 33 is, as a rule, in a range of 20...50 mm, and, in a corresponding way, the mutual spacing of the nozzle holes 36 in the transverse direction and in the machine direction is, as a rule, in a range of 40...100 mm.

[0056] Further, as to the dimensioning of the blow boxes shown in Figs. 6 and 7, it can be stated as follows, with reference to the denotations in Fig. 6. The angle a of the V-section groove 32 in the middle of the carrier face is, as a rule, in a range of a = 50°...90°, in which case the angle b of the Coanda faces 31b is in a range of b = 45°...65°. The height h_1 of the V-section groove 32 is, as a rule, in a range of h_1 = (2...5) x Φ, wherein Φ is the diameter of the nozzle holes 33 in the walls of the V-section groove 32. The diameter Φ of the nozzle holes 33 is chosen as related to the diameter of the direct-blow nozzles 36 in the carrier face so that the air quantity in the carrier-blowings B_3 blown through the nozzle holes 33 is about 30...60 %, preferably 35...45 %, of the overall air quantity of the blowings B_2 and B_3. The length L_1 of the bevelled or step-formed lateral portions 35,35b,35d, 35e in the carrier face 31 is chosen so that it is (0.1... 0.3) x L, preferably (0.2...0.25) x L, wherein L is the total length of the blow box 30 in the machine direction. Said length L is, as a rule, in a range of L ≈ 300...500 mm. The difference in height h_2 of the bevelled portions 35,35d or of the step-formed portions 35b and 35e is chosen in a range of h_2 = 7...15 mm, preferably h_2 ≈ 10 mm.

[0057] Figs. 9 and 10 illustrate test results obtained with nozzles as shown in Figs. 7A...7E graphically. In Figs. 9 and 10, the vertical axis represents the relative heat transfer coefficient α_R, and the horizontal axis rep-

resents the distance of the web W from the carrier face 31, expressly from its plane portion 34. In Figs. 7A...7E, the letter symbol corresponds to the curves A...E in Figs. 9 and 10.

[0058] Of the nozzle described above, versions as shown in Figs. 7A...7E were made, whose transfer of heat was examined in a static test device by blowing hot air against a plane metal face. The efficiency of the transfer of heat was obtained by measuring the rate of heating of the plate by means of temperature-measurement detectors inlaid in it. In Figs. 9 and 10, the measured relative heat-transfer coefficients α_R are seen as a function of the distance H between the web and the carrier face 31 of the nozzle box at two different blow velocities. According to the results, a lowering h_1 of the lateral portions 35;35b;35d;35e provides an increase of an order of 5...10 % in the coefficient of heat transfer as compared with a plane carrier face (Fig. 7C, carrier face 31c), when the distance H equals the normal airborne distance of a pulp web W (3...6 mm). On the contrary, at larger distances H, a lowering of the lateral portions 35 does not give any corresponding advantage. The increase was highest in the case of the nozzles at which the lateral portions 35;35b of the carrier face 31 had been lowered most, on the average (Figs. 7A and 7B). The measurement results given in Fig. 9 were obtained with a blow velocity of w_{puh} = 26 m/s of the blowings B_2 and B_3, and the results given in Fig. 10 were obtained with a corresponding blow velocity of w_{puh} = 34 m/s, while the temperature T_{puh} of the blow air was T_{puh} = 150°C. As comes out from Figs. 9 and 10, there are substantially great differences in the relative heat-transfer coefficient α_R exactly at the optimal airborne web W distances H = 3...6 mm.

[0059] The simulation and measurement method employed in the measurements of Figs. 9 and 10 has been described in more detail in the paper by P. Heikkilä and I. Jokioinen, "Airfoil Dryer Heat Transfer", published in The Helsinki Symposium on Alternate Methods of Pulp and Paper Drying in Helsinki, June 4...7 (1991).

[0060] Based on the measurements described above, the most advantageous embodiment of the invention is, according to the present-day opinion and on the basis of the available measurement results, the blow-nozzle box 30A as shown in Fig. 7A. According to the measurement results of Figs. 9 and 10, a carrier face 34b,35b with a steep step formation (37), as shown in Fig. 7B, is optimal in view of the transfer of heat, but a nozzle-blow-box 30A as shown in Fig. 7A, which is provided with continuously lowering ramp-formed lateral portions 35 of the carrier face, is preferable in an overall consideration, because, in it, the risk of formation of a "cigar" is lower, for the geometry of the blow face does not include sharp angles. Thus, according to a present-day estimate, a nozzle-blow-box 30A as shown in Fig. 7A (also in respect of its dimensions) is the best embodiment of the invention in a case in which the distance, e.g., of a pulp web W from the horizontal portion 34 of the carrier face 31 is ~ 5 mm.

[0061] In the following, the patent claims will be given, and the different details of the invention may show variation within the scope of the inventive idea defined in said claims and differ from what has been stated above for the sake of example only.

Claims

1. A method of drying material webs in an air dryer, in particular material webs of relatively high grammage, such as pulp webs, in which method heat is transferred to the web (W), the web (W) is supported by air free of contact and the run of the web (W) through the dryer is stabilized by means of air jets (B_2, B_3) applied from a nozzle-carrier face (31) placed underneath the web (W), which air jets comprise air jets (B_3) substantially parallel to the plane of the web (W), directed in the running direction of the web (W) and opposite to said running direction, which are blown crosswise out of a groove (32) provided in the middle of the nozzle-carrier face (31) transverse to the running direction of the web, the nozzle-carrier face (31) comprising plane portions (34; 34b; 34d; 34e) provided at both sides of said groove (32) which are placed in the same plane parallel to the plane of the web (W),
characterized in that
air jets (B_2) substantially perpendicular to the web (W) are applied from nozzle holes (36) provided in said plane portions (34; 34b; 34d; 34e) and in lateral portions (35; 35b; 35d; 35e) of said nozzle-carrier face (31) provided at the side of each plane portion (34; 34b; 34d; 34e) opposite to said groove (32), said lateral portions (35; 35b; 35d; 35e) being rampwise and/or stepwise lowered to a level lower than said plane portions (34; 34b; 34d; 34e), thus increasing the cross-sectional flow area between the web (W) and the nozzle-carrier face (31) in said lateral portions (35; 35b; 35d; 35e) so that the velocity of air flow parallel to the plane of the web in the area of said lateral portions (35; 35b; 35d; 35e) is lowered as compared with the velocity of air flow parallel to the plane of the web in the area of said plane portions (34; 34b; 34d; 34e).

2. A method according to claim 1, **characterized in that** a number of said nozzle-carrier faces (31) are employed, which are formed by the top side of a number of nozzle-blow boxes (30) placed underneath the web (W).

3. A method according to claim 1 or 2, **characterized in that** by means of said stepwise and/or rampwise lowered lateral portions (35; 35b; 35d; 35e) of the nozzle-carrier face (31), both the transfer of heat from the drying air to the web (W) is optimized and

the height (H) of airborne running of the web (W) to be dried and supported in relation to the nozzle-carrier face (31) is regulated.

4. A method according to claim 2, **characterized in that** said parallel air jets (B_3) applied from said groove (32) are directed out of nozzle openings (33) substantially tangentially to curved guide faces (31b) joining the walls of the groove to said plane portions (34; 34b; 34d; 34e) of the nozzle-carrier face (31) by means of which faces, by the Coanda effect, said blowings (B_3) are turned over a certain angle (b) to make them parallel to said plane portions and parallel to the plane of the web (W) that runs at their proximity. (B_2, B_3) are applied to the web (W), by means of which air jets (B_2, B_3) heat is transferred to the web (W) and contact-free air support and stabilization of the run of the web (W) are obtained, said nozzle-blow-box (30; 30A; 30B; 30D; 30E) comprising a box part provided with a nozzle-carrier face (31) facing the web (W), said nozzle-carrier face (31) comprising:

a) a substantially V-section groove (32) provided in the middle of said nozzle-carrier face (31) transverse to the running direction of the web (W), which groove (32) is opened towards the web (W) and in whose opposite walls there are series of nozzle holes (33) so that, out of said series of nozzle holes (33), support and stabilization air jets (B_3) are blown crosswise, substantially parallel to the plane of the web (W), in the running direction of the web (W) and opposite to said running direction; and
b) plane portions (34; 34b; 34d; 34e) provided at both sides of said groove (32), said plane portions (34; 34b; 34d; 34e) being placed in the same plane parallel to the plane of the web (W);
characterized in that said nozzle carrier-face (31) further comprises:
c) lateral portions (35; 35b; 35d; 35e) provided at the side of each of said plane portions (34; 34b; 34d; 34e) opposite to said groove (32), said lateral portions (35; 35b; 35d; 35e) being rampwise and/or stepwise lowered to a level lower than said plane portions (34; 34b; 34d; 34e), so as to be placed further apart from the web (W); and
d) nozzle holes (36) in said plane portions (34; 34b; 34d; 34e) and said lateral portions (35; 35b; 35d; 35e), through which additional air jets (B_2) substantially perpendicular to the plane of the web (W) are applied;
the arrangement being such that the velocity of air flow parallel to the plane of the web (W) in the area of said lateral portions (35; 35b; 35d; 35e) is lowered as

5. A method according to one of claims 2 to 4, **characterized in that** the blow-air quantity of said parallel air jets (B_3) blown crosswise along the nozzle-carrier face (31) and parallel to the plane of the web (W) is 30...60%, preferably about 35...45% of the overall blow-air quantity of the nozzle-blow-box (30).

6. A method according to one of claims 2 to 5, **characterized in that** said parallel air jets (B_3) are slowed down in the lateral portions (35; 35b; 35d; 35e) of the nozzle-carrier face (31) over a length L_1 parallel to the run of the web (W), which length L_1 is chosen as L_1 = (0.1...0.3) X L, preferably L_1 = (0,2...0.25) X L, wherein L is the overall length of the nozzle-carrier face (31), which is again chosen in a range of L = 300...500 mm.

7. A method according to one of claims 2 to 6, **characterized in that** the blow air of the nozzle-blow-boxes (30) is removed out of a drying and support gap (25) formed between said web (W) and said nozzle-carrier faces (31) through spaces (30a) placed between said nozzle-blow-boxes (30).

8. A method according to one of claims 2 to 7, **characterized in that** placed opposite to the blow boxes (30) placed underneath the web (W) to be dried and supported, upper direct-blow boxes (40) are employed, out of which further air jets (B_1) substantially perpendicular to the plane of the web (W) are directed, in which case the web (W) is dried two-sidedly.

9. An air dryer for drying a material web (W), said air dryer comprising a nozzle-blow-box (30; 30A; 30B; 30D; 30E) placed underneath the web (W), through which air jets compared with the velocity of the air flow parallel to the plane of the web in the area of said plane portions (34; 34b; 34d; 34e).

10. An air dryer according to claim 9, **characterized in that** extensions of both of the plane walls of said V-section groove (32) are constituted by curved Coanda guide-faces (31b) joining said plane walls to said plane portions (34; 34b; 34d; 34e) of the nozzle-carrier face (31), that the nozzle holes (33) provided in the walls of said V-section grooves (32) are fitted in such a way that the principal direction of the air jets (B_3) discharged from them is substantially tangential to the curved Coanda guide face (31b) placed facing it.

11. An air dryer according to claim 9 or 10, **characterized in that** the angle (a) between the plane walls of said V-section groove (32) is in a range of a = 50°...90°, that the depth h_1 of said V-section groove is h_1 = (2...5) x φ, wherein φ is the

diameter of the nozzle holes in the walls of said V-section groove (32).

12. An air dryer according to one of claims 9 to 11, **characterized in that,** with respect to their length L_1 in the direction of running of the material web (W), said stepwise and/or rampwise lowered lateral portions (35; 35b; 35d; 35e) of the nozzle-carrier face (31) of the nozzle-blow-box have been chosen so that L_1 = (0.1...0.3) X L, preferably L_1 = (0.2...0.25) X L, wherein L is the overall length of the nozzle-blow-box (30) in the direction of running of the web (W), which length has been chosen in a range of L = 300...500 mm, and that the maximum difference in height (h_2) of said lateral portions (35; 35b; 35d, 35e) of the nozzle-carrier face (31), as compared with said plane portions (34; 34b; 34d; 34e) of the nozzle-carrier face (31), has been chosen in a range of h_2 = 7...15 mm, preferably $h_2 \approx$ 10 mm.

13. An air dryer according to one of claims 9 to 12, **characterized in that** said nozzle holes (33) in the V-section groove (32) are placed in the opposite walls of the V-section groove as staggered alternatively and as substantially uniformly spaced, which spacing has been chosen in a range of 20...50 mm, and that the nozzle holes (36) in said nozzle-carrier face (31) through which said additional air jets (B_2) substantially perpendicular to the plane of the web are applied are arranged as staggered in relation to said nozzle holes (33) in the V-section groove (32) and placed in 3...5 transverse rows in the running direction of the web (W) and as substantially uniformly spaced both in the running direction of the web (W) and in the transverse direction, which spacing has been chosen in a range of 40...100 mm.

14. A pulp air dryer as claimed in any of the claims 9 to 13 comprising a number of said nozzle-blow-boxes (30), wherein said nozzle-blow-boxes (30) are placed in the direction of running of a pulp web (W) one after the other in the same horizontal plane at horizontal distances (30a) from one another, through which distances (30a) the air that supports, dries and stabilizes the pulp web (W) is primarily removed from treatment gaps (25) formed between the nozzle-carrier face (31) of said nozzle-blow-boxes (30) and said pulp web (W), and wherein there are several lines of said nozzle-blow-boxes (30) placed one above the other, so that the pulp web (W) to be dried runs horizontally between said lines backward and forward inside a hood (12), the running direction of the pulp web (W) being reversed between said backward and forward runs by means of reversing rolls (13).

15. A pulp dryer according to claim 14, **characterized in that** said pulp dryer comprises direct-blow-boxes (40) which are placed opposite to said nozzle-blow-boxes (30), above the material web (W), said direct-blow-boxes (40) comprising nozzle openings or slots (42) placed in a plane face (41) of said boxes facing the web (W) for applying air jets (B_1) substantially perpendicular to the web, wherein between said direct-blow-boxes (40), there are intermediate spaces (40a), through which the air of said air jets (B_1) is passed further.

16. A pulp dryer according to claim 15, **characterized in that** said nozzle-blow-boxes (30) placed underneath the web (W) and the direct-blow-boxes (40) placed opposite to them are of equal length, as compared with each other, in the running direction of the web (W) and placed one facing the other as uniformly spaced.

Patentansprüche

1. Verfahren zum Trocknen von Materialbahnen in einem Lufttrockner, insbesondere Materialbahnen relativ hohen Flachengewichts, wie etwa Stoffbahnen, in welchem Verfahren Warme zu der Bahn (W) transferiert wird, wobei die Bahn (W) berührungsfrei mittels Luft abgestützt wird und der Verlauf der Bahn (W) durch den Trockner mit Hilfe von Luftstrahlen (B_2, B_3) stabilisiert wird, die von einer unterhalb der Bahn (W) platzierten Düsentragerfläche (31) aufgetragen werden, welche Luftstrahlen (B_3) aufweisen, die im wesentlichen zu der Ebene der Bahn (W) parallel sind, und zwar ausgerichtet in der Laufrichtung der Bahn (W) und entgegengesetzt zu der Laufrichtung, die über Kreuz aus einer Nut (32) geblasen werden, die in der Mitte der Düsenträgerfläche (31) quer zu der Laufrichtung der Bahn vorgesehen ist, wobei die Dusentragerflache (31) Flachabschnitte (34; 34b; 34d; 34e) aufweist, die an beiden Seiten der Nut (32) vorgesehen sind, die in derselben Ebene parallel zu der Ebene der Bahn (W) platziert sind, **dadurch gekennzeichnet, dass**

Luftstrahlen (B_2) im wesentlichen senkrecht zu der Bahn (W) von Düsenlöchern (36) ausgetragen werden, die in den Flachabschnitten (34; 34b; 34d; 34e) und in Seitenabschnitten (35; 35b; 35d; 35e) der Düsenträgerfläche (31) vorgesehen sind, die an der Seite jedes Flachabschnitts (34; 34b; 34d; 34e) gegenuberliegend zu der Nut (32) vorgesehen ist, wobei die Seitenabschnitte (35; 35b; 35d; 35e) rampenartig und/oder stufenartig auf ein Niveau abgesenkt werden, das niedriger ist als das der Flachabschnitte (34; 34b; 34d; 34e), wodurch der Querschnittsstromungsbereich zwischen der Bahn (B) und der Dusentragerflache (31) in den Seitenabschnitten (35; 35b; 35d; 35e) derart erhöht wird, dass die Geschwindigkeit der Luftströmung parallel zu der Ebene der Bahn in dem Bereich der

Seitenabschnitte (35; 35b; 35d; 35e) im Vergleich zu der Geschwindigkeit einer Luftströmung parallel zu der Ebene der Bahn in dem Bereich der Flachabschnitte (34; 34b; 34d; 34e) abgesenkt ist.

2. Verfahren nach Anspruch 1, **dadurch gekennzeichnet, dass** eine Anzahl der Düsenträgerflächen (31) angewendet wird, die mittels der Oberseite einer Anzahl von Düsenblaskästen (30) gebildet sind, die unterhalb der Bahn (W) platziert sind.

3. Verfahren nach Anspruch 1 oder 2, **dadurch gekennzeichnet, dass** mit Hilfe der stufenartig und/oder rampenartig abgesenkten Seitenabschnitte (35; 35b; 35d; 35e) der Düsenträgerfläche (31) sowohl der Warmetransfer von der Trockenluft zu der Bahn (W) optimiert wird als auch die Höhe (H) des luftgetragenen Verlaufes der zu trocknenden Bahn (W), die relativ zu der Dusentragerflache (31) gestützt ist, reguliert wird.

4. Verfahren nach Anspruch 2, **dadurch gekennzeichnet, dass** die parallelen Luftstrahlen (B_3), die von der Nut (32) ausgeübt werden, aus Dusenöffnungen (33) im wesentlichen tangential zu gekrümmten Führungsflächen (31b) ausgerichtet sind, die die Wande der Nut mit den Flachabschnitten (34; 34b; 34d; 34e) der Dusentragerflache (31) verbinden, wobei mit Hilfe dieser Flächen mittels des Coanda-Effekts die Blasungen (B_3) um einen bestimmten Winkel (b) umgeschwenkt werden, um diese parallel zu den Flachabschnitten und parallel zu der Ebene der Bahn (W), die in ihrer Nahe verläuft, zu gestalten.

5. Verfahren nach einem der Ansprüche 2 bis 4, **dadurch gekennzeichnet, dass** die Blasluftmenge der parallelen Luftstrahlen (B_3), die entlang der Düsenträgerfläche (31) uber Kreuz und parallel zu der Ebene der Bahn (W) geblasen werden, 30 bis 60%, bevorzugt etwa 35 bis 45% der Gesamtblasluftmenge des Dusenblaskastens (30) betragt.

6. Verfahren nach einem der Ansprüche 2 bis 5, **dadurch gekennzeichnet, dass** die parallelen Luftstrahlen (B_3) in den Seitenbereichen (35; 35b; 35d; 35e) der Düsenträgerfläche (31) uber eine Lange (L_1) parallel zu dem Verlauf der Bahn (W) verlangsamt werden, welche Lange L_1 ausgewählt ist als L_1 = (0,1 bis 0,3) x L, bevorzugt L_1 = (0,2 bis 0,25) x L, wobei L die Gesamtlange der Dusentragerflache (31) ist, die abermals in einem Bereich von L = 300 bis 500 mm ausgewählt wurde.

7. Verfahren nach einem der Ansprüche 2 bis 6, **dadurch gekennzeichnet, dass** die Blasluft der Blasluftdüsenblaskästen (30) aus einem Trocknungs- und Stützspalt (25) abgezogen wird, der zwischen der Bahn (W) und den Düsenträgerflächen (31) ausgebildet ist, und zwar durch zwischen den Dusenblaskasten (30) platzierte Räume (30a).

8. Verfahren nach einem der Ansprüche 2 bis 7, **dadurch gekennzeichnet, dass** gegenüberliegend zu den Blaskästen (30), die unterhalb der zu trocknenden und zu stützenden Bahn platziert sind, obere Direktblaskästen (40) angewendet werden, aus welchen weitere Luftstrahlen (B_1) im wesentlichen senkrecht zu der Ebene der Bahn (W) ausgerichtet sind, in welchem Falle die Bahn (W) zweiseitig getrocknet wird.

9. Lufttrockner zur Trocknung einer Materialbahn (W), wobei der Lufttrockner einen unterhalb der Bahn (W) platzierten Düsenblaskasten (30; 30A, 30B; 30D; 30E) aufweist, durch den Luftstrahlen (B_2, B_3) auf die Bahn (W) ausgeübt werden, wobei mit Hilfe der Luftstrahlen (B_2, B_3) Warme zu der Bahn (W) übertragen wird und eine beruhrungsfreie Luftstützung und Stabilisierung des Verlaufes der Bahn (W) erhalten wird, wobei der Dusenblaskasten (30; 30A; 30B; 30D; 30E) ein Kastenteil aufweist, das mit einer Düsenträgerfläche (31) versehen ist, die der Bahn (W) zugewandt ist, wobei die Düsenträgerfläche (31) aufweist:

a) eine Nut (32) mit einem im wesentlichen V-förmigen Querschnitt, die in der Mitte der Düsenträgerfläche (31) quer zu der Laufrichtung der Bahn (W) vorgesehen ist, welche Nut (32) in Richtung auf die Bahn (W) geöffnet ist und in deren gegenüberliegenden Wanden Reihen von Düsenlöchern (33) vorhanden sind, so dass aus den Reihen von Düsenlöchern (33) Stütz- und Stabilisierungsluftstrahlen (B_3) über Kreuz geblasen werden, und zwar im wesentlichen parallel zu der Ebene der Bahn (W) in der Laufrichtung der Bahn (W) und entgegengesetzt zu der Laufrichtung; und
b) Flachabschnitte (34; 34b; 34d; 34e), die an beiden Seiten der Nut (32) vorgesehen sind, wobei die Flachabschnitte (34; 34b; 34d; 34e) in derselben Ebene parallel zu der Ebene der Bahn (W) platziert sind; **dadurch gekennzeichnet, dass**

die Dusentragerfläche (31) ferner aufweist:

c) Seitenabschnitte (35; 35b, 35d; 35e), die an der Seite jedes der Flachabschnitte (34; 34b; 34d; 34e) gegenüberliegend der Nut (32) vorgesehen sind, wobei die Seitenabschnitte (35; 35b; 35d; 35e) rampenartig und/oder stufenartig auf ein Niveau abgesenkt sind, das niedriger ist als die Flachabschnitte (34; 34b; 34d; 34e), um weiter weg von der Bahn (W) platziert zu

sein; und

d) Düsenlöcher (36) in den Flachabschnitten (34; 34b; 34d; 34e) und den Seitenabschnitten (35; 35b, 35d; 35e), durch die zusätzliche Luftstrahlen (B_2) im wesentlichen senkrecht zu der Ebene der Bahn (W) ausgeübt werden; wobei

die Anordnung derart ist, dass die Geschwindigkeit der Luftstromung parallel zu der Ebene der Bahn (W) in dem Bereich der Seitenabschnitte (35; 35b; 35d; 35e) im Vergleich mit der Geschwindigkeit der Luftströmung parallel zu der Ebene der Bahn in dem Bereich der Flachabschnitte (34; 34b, 34d; 34e) abgesenkt ist.

10. Lufttrockner nach Anspruch 9, **dadurch gekennzeichnet, dass** Ausdehnungen beider Flachwände der Nut (32) mit V-Querschnitt mittels gekrümmter Koanda-Führungsflächen (31b) ausgebildet sind, die die Flachwände mit den Flachabschnitten (34; 34b; 34d; 34e) der Dusentragerflache (31) verbinden, und dass die Dusenlocher (33), die in den Wänden der Nuten (32) mit V-Querschnitt vorgesehen sind, in einer solchen Weise angebracht sind, dass die Hauptrichtung der Luftstrahlen (B_3), die aus diesen ausgestoßen wird, im wesentlichen tangential zu der gekrümmten Koanda-Fuhrungsflache (31b) ist, die dieser zugewandt platziert ist.

11. Lufttrockner nach Anspruch 9 oder 10, **dadurch gekennzeichnet, dass** der Winkel (a) zu zwischen den Flachwänden der Nut (32) mit V-Querschnitt in einem Bereich a = 50° bis 90° liegt, und dass die Tiefe h_1 der Nut mit V-Querschnitt bei h_1 = (2 bis 5) x φ liegt, wobei φ der Durchmesser der Nutlöcher in den Wanden der Nut (32) mit V-Querschnitt ist.

12. Lufttrockner nach einem der Ansprüche 9 bis 11, **dadurch gekennzeichnet, dass** bezuglich ihrer Länge L_1 in der Laufrichtung der Materialbahn (W) die stufenartig und/oder rampenartig abgesenkten Seitenabschnitte (35; 35b; 35d; 35e) der Dusentragerflache (31) des Düsenblaskastens derart ausgewählt worden ist, dass gilt: L_1 = (0,1 bis 0,3) x L, bevorzugt L_1 (0,2 bis 0,25) x L, wobei L die Gesamtlänge des Düsenblaskastens (30) in der Laufrichtung der Bahn (W) ist, welche Länge in einen Bereich von L = 300 bis 500 mm ausgewählt worden ist, und dass der Maximalunterschied in der Höhe (h_2) der Seitenabschnitte (35; 35b; 35d; 35e) im Vergleich mit den Flachabschnitten (34; 34b; 34d; 34e) der Dusentragerflache (31) in einem Bereich von h_2 = 7 bis 15 mm, bevorzugt $h_2 \approx$ 10 mm ausgewählt worden ist.

13. Lufttrockner nach einem der Anspruche 9 bis 12, **dadurch gekennzeichnet, dass** die Düsenlöcher (33) in der Nut (32) mit V-Querschnitt in den gegenuberliegenden Wänden der Nut mit V-Querschnitt platziert sind, und zwar alternativ versetzt und im wesentlichen gleichmaßig beabstandet, welcher Abstand in einem Bereich von 20 bis 50 mm ausgewählt worden ist, und dass die Düsenlocher (36) in der Dusenträgerfläche (31), durch die die zusätzlichen Luftstrahlen (B_2) im wesentlichen senkrecht zu der Ebene der Bahn ausgeubt werden, in versetzter Beziehung zu den Dusenlochern (33) in der Nut (32) mit V-Querschnitt angeordnet sind und in 3 bis 5 Querreihen in der Laufrichtung der Bahn (W) und im wesentlichen gleichmäßig beabstandet sowohl in der Laufrichtung der Bahn (W) als auch in der Querrichtung platziert sind, welcher Abstand in einem Bereich von 40 bis 100 mm ausgewahlt worden ist.

14. Stofflufttrockner nach einem der Ansprüche 9 bis 13 mit einer Anzahl der Dusenblaskasten (30), wobei die Düsenblaskästen (30) in der Richtung des Verlaufs einer Stoffbahn (W) nacheinander in derselben Horizontalebene an horizontalen Abständen (30a) voneinander platziert sind, durch welche Abstände (30a) die Luft, die die Stoffbahn (W) stützt, trocknet und stabilisiert, hauptsachlich von Behandlungsspalten (25), die zwischen der Düsenträgerfläche (31) der Düsenblaskästen (30) und der Stoffbahn (W) gebildet sind, abgezogen wird, und wobei mehrere Reihen der Dusenblaskästen (30) vorhanden sind, die übereinander platziert sind, so dass die zu trocknende Stoffbahn (W) horizontal zwischen den Reihen vor und zurück innerhalb einer Haube (12) verlauft, und die Laufrichtung der Stoffbahn (W) zwischen den Vor- und Zurückläufen mit Hilfe von Umkehrwalzen (13) umgekehrt wird.

15. Stofftrockner nach Anspruch 14, **dadurch gekennzeichnet, dass** der Stofftrockner Direktblaskasten (40) aufweist, die gegenüberliegend den Düsenblaskästen (30) platziert sind, und zwar oberhalb der Materialbahn (W), wobei die Direktblaskästen (40) Düsenoffnungen oder -schlitze (42) aufweisen, die in einer ebenen Flache (41) der Kästen platziert sind, die der Bahn (W) zur Auftragung von Luftstrahlen (B_1) im wesentlichen senkrecht zu der Bahn zugewandt ist, wobei zwischen den Direktblaskästen (40) Zwischenräume (40a) vorhanden sind, durch die Luft der Luftstrahlen (B_1) weitergeleitet wird.

16. Stofftrockner nach Anspruch 15, **dadurch gekennzeichnet, dass** unterhalb der Bahn (W) die Düsenblaskästen (30) platziert sind und die Direktblaskästen (40), die diesen entgegengesetzt platziert sind, im Vergleich zueinander von gleicher Länge sind, und zwar in der Laufrichtung der Bahn (W) und einer dem anderen gleichmaßig zugewandt platziert.

Revendications

1. Procédé de séchage de bandes de matériaux dans un séchoir par air, en particulier des bandes de matériaux d'un grammage relativement fort, telles que des bandes de pâte à papier, procédé dans lequel de la chaleur est transférée à la bande (W), la bande (W) est supportée par de l'air sans aucun contact et le défilement de la bande (W), à travers le séchoir, est stabilisé au moyen de jets d'air (B_2, B_3) délivrés à partir d'une surface (31) de support de buses placée au-dessous de la bande (W), lesquels jets d'air comprennent des jets d'air (B_3) pour l'essentiel parallèles au plan de la bande (W), orientés dans la direction de défilement de la bande (W) et à l'opposé de ladite direction de défilement, qui sont insufflés transversalement hors d'une rainure (32) pratiquée au centre de la surface (31) de support de buses, transversalement à la direction de défilement de la bande, la surface (31) de support de buses comprenant des régions planes (34 ; 34b ; 34d ; 34e) prévues des deux côtés de ladite rainure (32), qui sont placées dans le même plan parallèle au plan de la bande (W),
caractérisé par le fait que
des jets d'air (B_2), pour l'essentiel perpendiculaires à la bande (W), sont délivrés à partir d'ajutages (36) prévus dans lesdites régions planes (34 ; 34b ; 34d ; 34e) et dans des régions latérales (35 ; 35b ; 35d ; 35e) de ladite surface (31) de support de buses, ménagées du côté de chaque région plane (34 ; 34b ; 34d ; 34e) qui est tourné à l'opposé vis-à-vis de ladite rainure (32), lesdites régions latérales (35 ; 35b ; 35d ; 35e) étant surbaissées, à la manière de rampes et/ou de gradins, jusqu'à un niveau plus bas que lesdites régions planes (34 ; 34b ; 34d ; 34e), en accroissant ainsi la zone de circulation en coupe transversale entre la bande (W) et la surface (31) de support de buses, dans lesdites régions latérales (35 ; 35b ; 35d ; 35e), de telle sorte que la vitesse de l'écoulement d'air parallèle au plan de la bande, dans la zone desdites régions latérales (35 ; 35b ; 35d ; 35e), soit diminuée comparativement à la vitesse de l'écoulement d'air parallèle au plan de la bande, dans la zone desdites régions planes (34 ; 34b ; 34d ; 34e).

2. Procédé selon la revendication 1, caractérisé par le fait qu'on utilise un certain nombre desdites surfaces (31) de support de buses, qui sont formées par la face supérieure d'un certain nombre de caissons (30) d'insufflation par buses, placés au-dessous de la bande (W).

3. Procédé selon la revendication 1 ou 2, caractérisé par le fait que lesdites régions latérales (35 ; 35b ; 35d ; 35e) de la surface (31) de support de buses, surbaissées à la manière de gradins et/ou de rampes, ont à la fois pour effet d'optimaliser le transfert de chaleur s'opérant de l'air de séchage vers la bande (W), et de réguler la hauteur (H) du défilement de la bande (W) sustentée par de l'air, devant être séchée et supportée, par rapport à la surface (31) de support de buses.

4. Procédé selon la revendication 2, caractérisé par le fait que lesdits jets d'air parallèles (B_3), délivrés à partir de ladite rainure (32), sont dirigés hors d'orifices de projection (33), pour l'essentiel tangentiellement à des surfaces courbes de guidage (31b) reliant les parois de la rainure auxdites régions planes (34 ; 34b ; 34d ; 34e) de la surface (31) de support de buses, surfaces au moyen desquelles, par effet Coanda, lesdites insufflations (B_3) sont déviées d'un certain angle (b) pour les rendre parallèles auxdites régions planes, et parallèles au plan de la bande (W) qui défile à leur proximité.

5. Procédé selon l'une des revendications 2 à 4, caractérisé par le fait que la quantité d'air d'insufflation desdits jets d'air parallèles (B_3), insufflés transversalement le long de la surface (31) de support de buses et parallèlement au plan de la bande (W), est de 30 ... 60 %, préférentiellement d'environ 35 ... 45 % de la quantité totale d'air d'insufflation du caisson (30) d'insufflation par buses.

6. Procédé selon l'une des revendications 2 à 5, caractérisé par le fait que lesdits jets d'air parallèles (B_3) sont ralentis dans les régions latérales (35 ; 35b ; 35d ; 35e) de la surface (31) de support de buses, sur une longueur L_1 parallèle au défilement de la bande (W), laquelle longueur L_1 est choisie telle que L_1 = (0,1 ... 0,3) X L, de préférence L_1 = (0,2 ... 0,25) X L, sachant que L est la longueur totale de la surface (31) de support de buses, laquelle est à son tour choisie dans la plage de L = 300 ... 500 mm.

7. Procédé selon l'une des revendications 2 à 6, caractérisé par le fait que l'air d'insufflation des caissons (30) d'insufflation par buses est expulsé d'un interstice (25) de séchage et de support, réservé entre ladite bande (W) et lesdites surfaces (31) de support de buses, à travers des espaces (30a) situés entre lesdits caissons (30) d'insufflation par buses.

8. Procédé selon l'une des revendications 2 à 7, caractérisé par le fait qu'on utilise, en vis-à-vis des caissons d'insufflation (30) placés au-dessous de la bande (W) devant être séchée et supportée, des caissons supérieurs (40) d'insufflation directe hors desquels sont dirigés des jets d'air supplémentaires (B_1), pour l'essentiel perpendiculaires au plan de la bande (W), auquel cas la bande (W) est séchée sur

deux côtés.

9. Séchoir par air pour sécher une bande de matériau (W), ledit séchoir par air comprenant un caisson (30 ; 30A ; 30B ; 30D ; 30E) d'insufflation par buses, placé au-dessous de la bande (W) et à travers lequel des jets d'air (B_2, B_3) sont délivrés à la bande (W), lesdits jets d'air (B_2, B_3) permettant de transférer de la chaleur à la bande (W), et d'obtenir un support par de l'air sans aucun contact, et une stabilisation du défilement de la bande (W), ledit caisson (30 ; 30A ; 30B ; 30D ; 30E) d'insufflation par buses comprenant une partie de caisson munie d'une surface (31) de support de buses située en regard de la bande (W), ladite surface (31) de support de buses comprenant :

a) une rainure (32) de section sensiblement en V pratiquée au centre de ladite surface (31) de support de buses, transversalement par rapport à la direction du défilement de la bande (W), laquelle rainure (32) est ouverte en direction de la bande (W), et ses parois opposées présentent des séries d'ajutages (33) de telle sorte que des jets (B_3) d'air de support et de stabilisation soient insufflés transversalement hors desdites séries d'ajutages (33), pour l'essentiel parallèlement au plan de la bande (W), dans la direction de défilement de la bande (W) et à l'opposé de ladite direction de défilement ; et

b) des régions planes (34 ; 34b ; 34d ; 34e) ménagées des deux côtés de ladite rainure (32), lesdites régions planes (34 ; 34b ; 34d ; 34e) étant placées dans le même plan parallèle au plan de la bande (W) ;

caractérisé par le fait que ladite surface (31) de support de buses comprend en outre :

c) des régions latérales (35 ; 35b ; 35d ; 35e) ménagées du côté de chacune desdites régions planes (34 ; 34b ; 34d ; 34e) qui est tourné à l'opposé vis-à-vis de ladite rainure (32), lesdites régions latérales (35 ; 35b ; 35d ; 35e) étant surbaissées à la manière de rampes et/ou de gradins, jusqu'à un niveau plus bas que lesdites régions planes (34 ; 34b ; 34d ; 34e), de façon à être davantage éloignées de la bande (W) ; et

d) des ajutages (36), pratiqués dans lesdites régions planes (34 ; 34b ; 34d ; 34e) et dans lesdites régions latéraies (35 ; 35b ; 35d ; 35e), à travers lesquels des jets d'air supplémentaires (B_2) sont délivrés pour l'essentiel perpendiculairement au plan de la bande (W) ;

l'agencement étant tel que la vitesse de l'écoulement d'air parallèlement au plan de la bande (W), dans la zone desdites régions latérales (35 ; 35b ; 35d ; 35e), soit diminuée comparativement à la vitesse de l'écoulement d'air parallèlement au plan de la bande, dans la zone desdites régions planes (34 ; 34b ; 34d ; 34e).

10. Caisson d'insufflation par buses selon la revendication 9, caractérisé par le fait que des prolongements des deux parois planes de ladite rainure (32) de section en V sont constitués par des surfaces courbes de guidage (31b) à effet Coanda, reliant lesdites parois planes auxdites régions planes (34 ; 34b ; 34d ; 34e) de la surface (31) de support de buses ; et que les ajutages (33), pratiqués dans les parois desdites rainures (32) de section en V, sont agencés de façon telle que la direction principale des jets d'air (B_3), déchargés desdits ajutages, soit pour l'essentiel tangentielle à la surface courbe de guidage (31b) à effet Coanda, qui lui fait face.

11. Caisson d'insufflation par buses selon la revendication 9 ou 10, caractérisé par le fait que l'angle (a), entre les parois planes de ladite rainure (32) de section en V, se situe dans une plage de a = 50° ... 90° ; et que la profondeur h_1 de ladite rainure de section en V est $h_1 = (2 ... 5) \times \varphi$, sachant que φ est le diamètre des ajutages pratiqués dans les parois de ladite rainure (32) de section en V.

12. Caisson d'insufflation par buses selon l'une des revendications 9 à 11, caractérisé par le fait que, par rapport à leur longueur L_1 dans la direction de défilement de la bande de matériau (W), lesdites régions latérales (35 ; 35b ; 35d ; 35e) de la surface (31) de support de buses du caisson d'insufflation par buses, qui sont surbaissées à la manière de gradins et/ou de rampes, ont été choisies de telle sorte que $L_1 = (0,1 ... 0,3) X L$, de préférence $L_1 = (0,2 ... 0,25) X L$, sachant que L est la longueur totale du caisson (30) d'insufflation par buses dans la direction de défilement de la bande (W), laquelle longueur a été choisie dans une plage de L = 300 ... 500 mm ; et que la différence maximale en hauteur (h_2) desdites régions latérales (35 ; 35b ; 35d ; 35e) de la surface (31) de support de buses, comparativement auxdites régions planes (34 ; 34b ; 34d ; 34e) de la surface (31) de support de buses, a été choisie dans une plage de h_2 = 7 ... 15 mm, préférentiellement $h_2 \approx 10$ mm.

13. Caisson d'insufflation par buses selon l'une des revendications 9 à 12, caractérisé par le fait que lesdits ajutages (33), pratiqués dans la rainure (32) de section en V, sont placés dans les parois opposées de la rainure de section en V, en étant échelonnés en alternance et espacés pour l'essentiel uniformément, lequel espacement a été choisi dans une pla-

ge de 20 ... 50 mm ; et que les ajutages (36) pratiqués dans ladite surface (31) de support de buses, à travers lesquels lesdits jets d'air supplémentaires (B_2) sont délivrés pour l'essentiel perpendiculairement au plan de la bande, sont agencés en étant échelonnés par rapport auxdits ajutages (33) pratiqués dans la rainure (32) de section en V, placés en 3 ... 5 rangées transversales dans la direction de défilement de la bande (W), et espacés pour l'essentiel uniformément, tant dans la direction de défilement de la bande (W) que dans la direction transversale, lequel espacement a été choisi dans une plage de 40 ... 100 mm

14. Séchoir de pâte à papier par air, tel que revendiqué dans l'une quelconque des revendications 9 à 13, comprenant un certain nombre desdits caissons (30) d'insufflation par buses, dans lequel lesdits caissons (30) d'insufflation par buses sont placés dans la direction de défilement d'une bande (W) de pâte à papier, en succession dans le même plan horizontal, à des distances horizontales (30a) les uns des autres, distances (30a) par l'intermédiaire desquelles l'air, qui supporte, sèche et stabilise la bande (W) de pâte à papier, est majoritairement expulsé d'interstices de traitement (25) réservés entre ladite bande (W) de pâte à papier et la surface (31) de support de buses desdits caissons (30) d'insufflation par buses ; et dans lequel se trouvent plusieurs lignes desdits caissons (30) d'insufflation par buses, placées les unes au-dessus des autres, de telle sorte que la bande (W) de pâte à papier devant être séchée défile horizontalement entre lesdites lignes, vers l'arrière et vers l'avant à l'intérieur d'une coiffe (12), la direction de défilement de la bande (W) de pâte à papier étant inversée, entre lesdits défilements vers l'arrière et vers l'avant, au moyen de rouleaux inverseurs (13) .

15. Séchoir de pâte à papier selon la revendication 14, caractérisé par le fait que ledit séchoir de pâte à papier comprend des caissons (40) d'insufflation directe qui sont placés en vis-à-vis desdits caissons (30) d'insufflation par buses, au-dessus de la bande de matériau (W), lesdits caissons (40) d'insufflation directe comprenant des ouvertures ou fentes de projection (42) pratiquées dans une surface plane (41) desdits caissons, tournée vers la bande (W), afin de délivrer des jets d'air (B_1) pour l'essentiel perpendiculaires à la bande, sachant que lesdits caissons (40) d'insufflation directe sont séparés par des espaces intercalaires (40a) à travers lesquels se poursuit la circulation de l'air desdits jets d'air (B_1).

16. Séchoir de pâte à papier selon la revendication 15, caractérisé par le fait que lesdits caissons (30) d'insufflation par buses placés au-dessous de la bande (W), et les caissons (40) d'insufflation directe placés en vis-à-vis de ces derniers, sont de longueur égale comparativement les uns aux autres, dans la direction de défilement de la bande (W), et sont agencés en regard les uns des autres avec espacement uniforme.

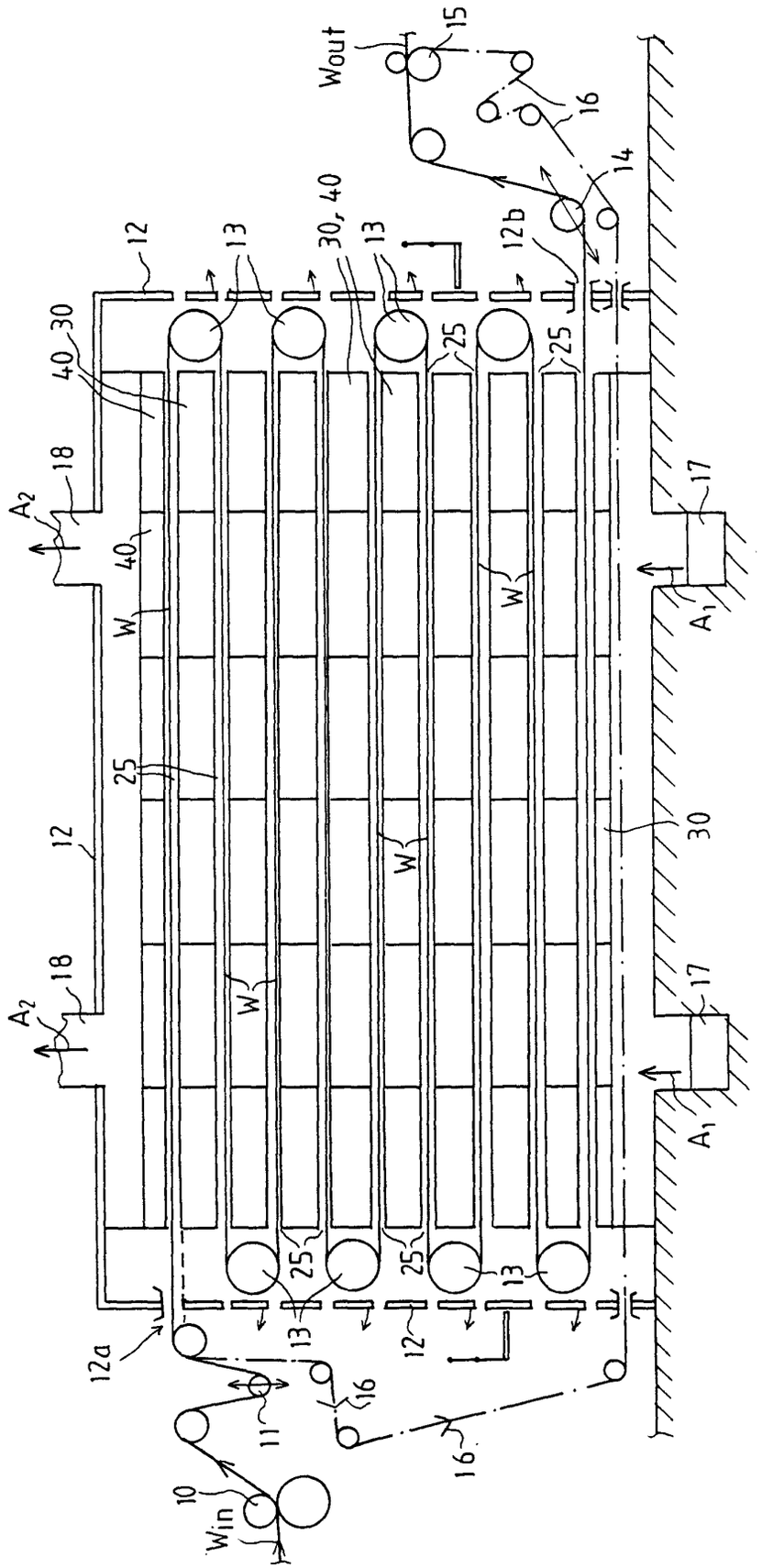

FIG. 1

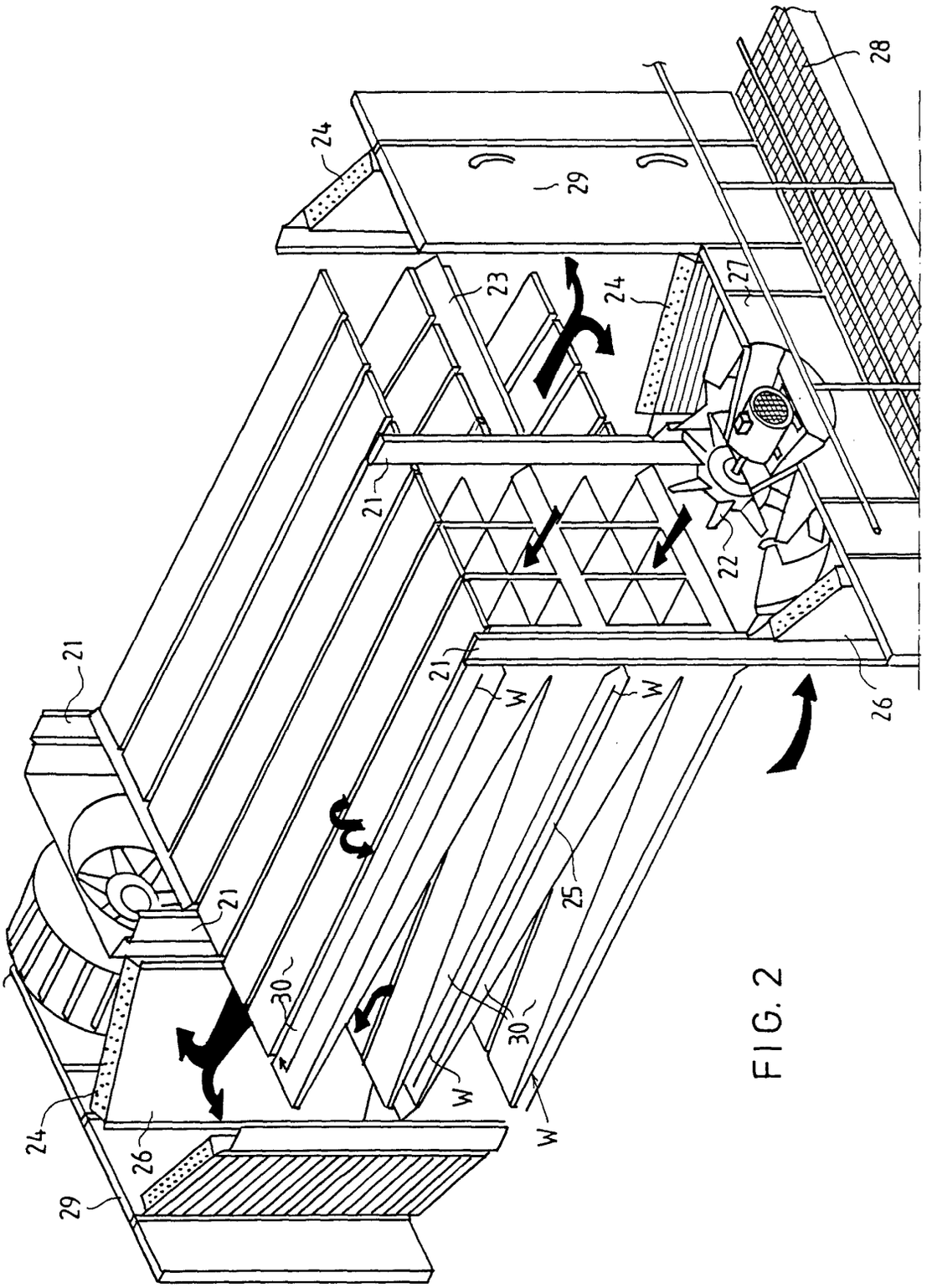

FIG. 2

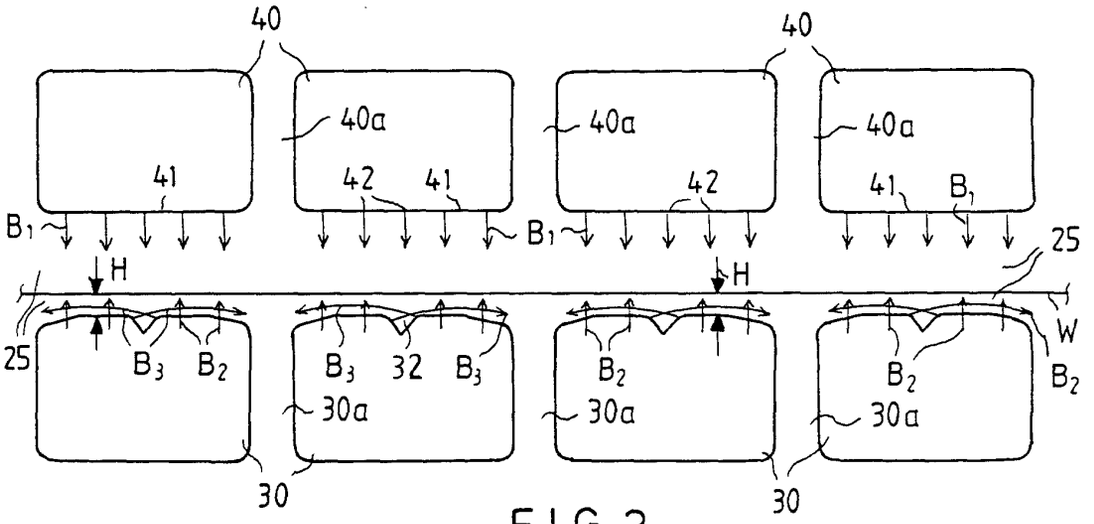

FIG. 3

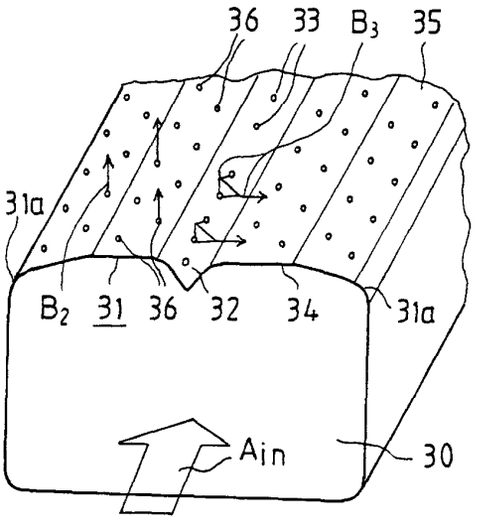

FIG. 4

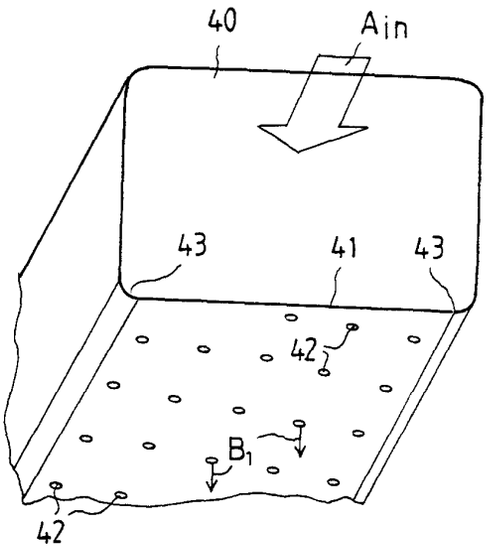

FIG. 5

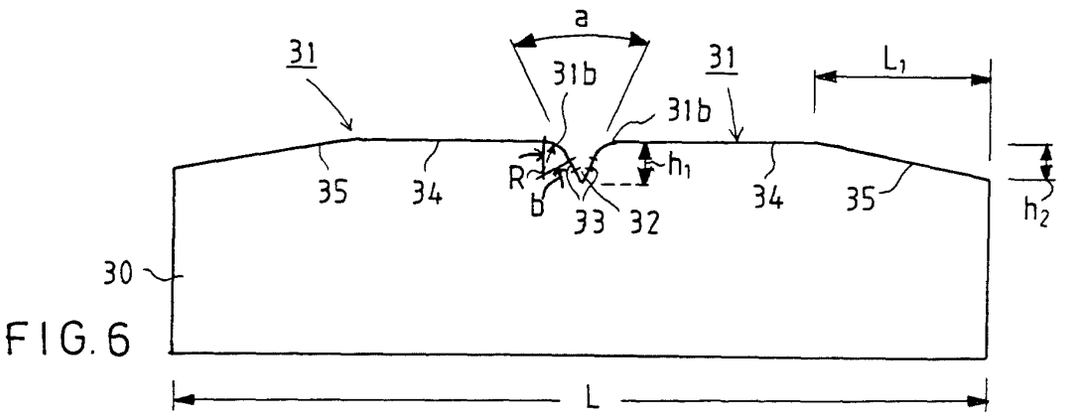

FIG. 6

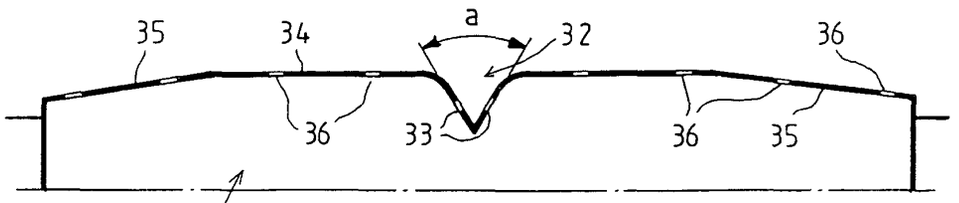

Fig. 7A

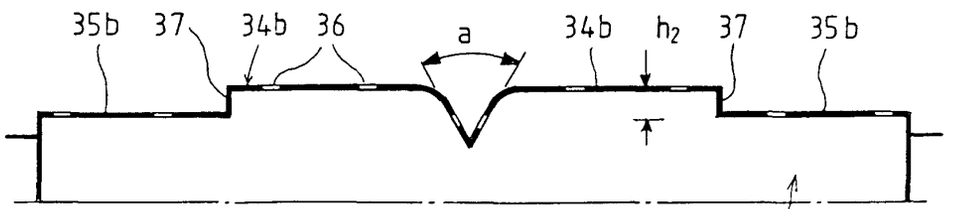

Fig. 7B

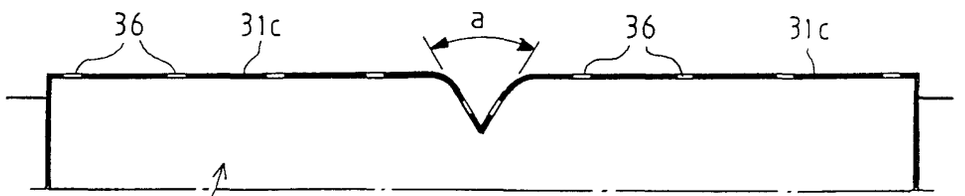

Fig. 7C

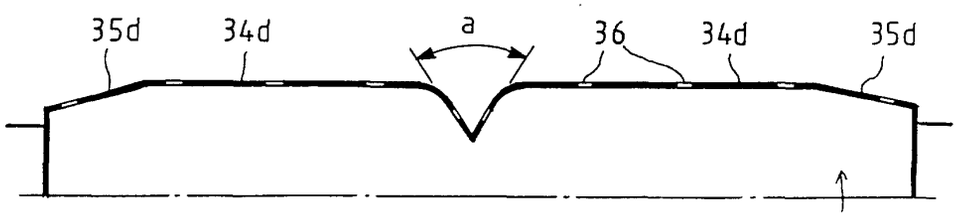

Fig. 7D

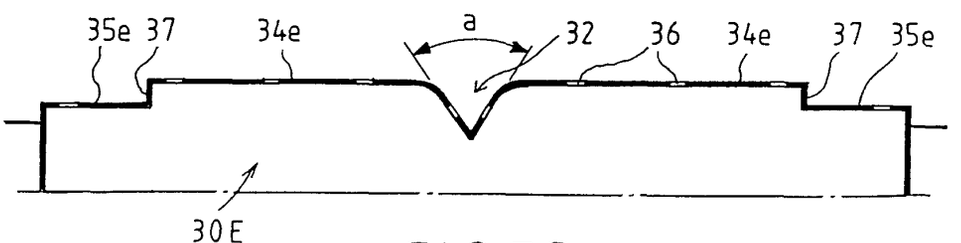

FIG. 7E

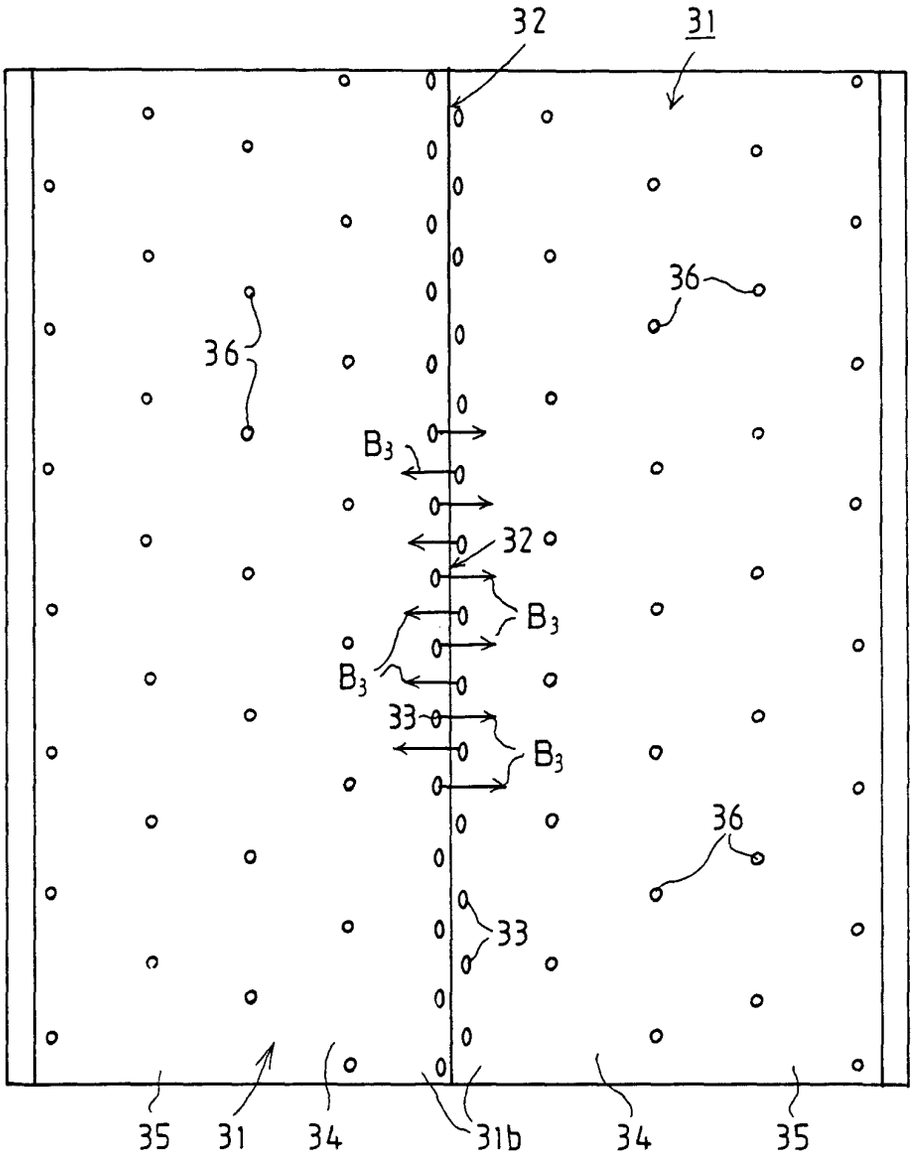
32
31
36
36
B3
32
B3
B3
33
B3
36
33
35
31
34
31b
34
35

FIG.8A

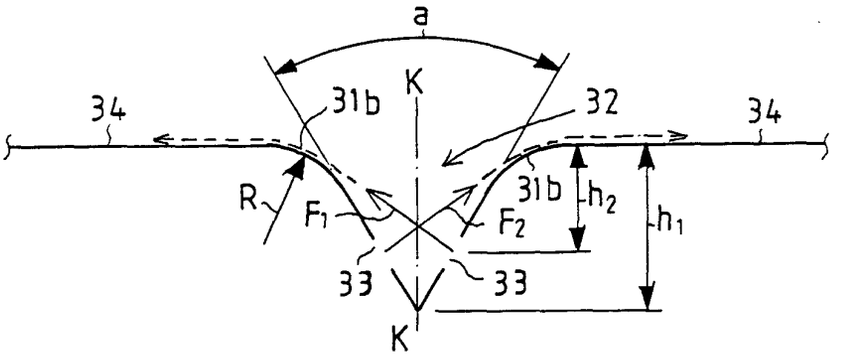
a
K
34
31b
32
34
R
F1
F2
31b
h2
h1
33
33
K

FIG.8B

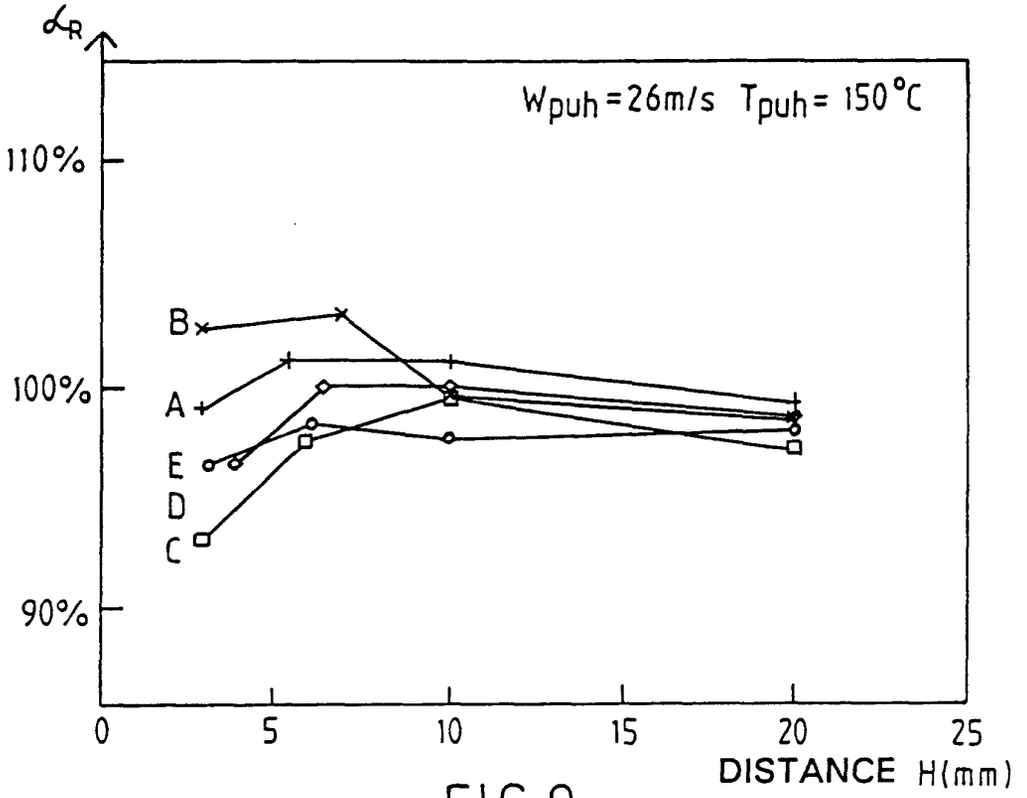
α_R
W_{puh} = 26m/s T_{puh} = 150°C
110%
100%
90%
B
A
E
D
C
0
5
10
15
20
25
DISTANCE H(mm)

FIG.9

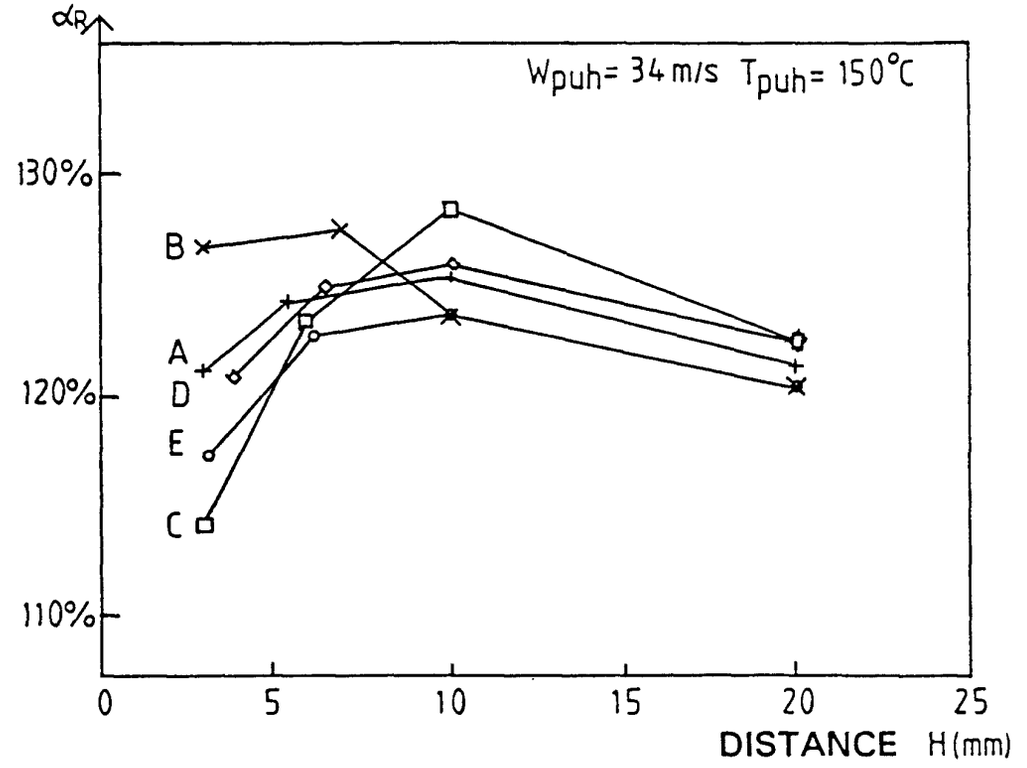
α_R
W_{puh} = 34 m/s T_{puh} = 150°C
130%
120%
110%
B
A
D
E
C
0
5
10
15
20
25
DISTANCE H(mm)

FIG. 10