PCT WORLD INTELLECTUAL PROPERTY ORGANIZATION
International Bureau

INTERNATIONAL APPLICATION PUBLISHED UNDER THE PATENT COOPERATION TREATY (PCT)

(51) International Patent Classification 5 :		(11) International Publication Number:
E06B 9/42, 9/56	A1	WO 93/18270
		(43) International Publication Date: 16 September 1993 (16.09.93)

(21) International Application Number: PCT/DK93/00090

(22) International Filing Date: 10 March 1993 (10.03.93)

(30) Priority data:
0322/92 11 March 1992 (11.03.92) DK

(71) Applicant *(for all designated States except US):* V. KANN RASMUSSEN INDUSTRI A/S [DK/DK]; Tobaksvejen 10, DK-2860 Søborg (DK).

(72) Inventors; and
(75) Inventors/Applicants *(for US only) :* KOLD, Ove [DK/DK]; Skolevænget 22, Borris, DK-6900 Skjern (DK). MIKKELSEN, Torben [DK/DK]; Østre Allé 79, DK-6900 Skjern (DK).

(74) Agents: RAFFNSØE, Knud, Rosenstand et al.; Internationalt Patent-Bureau, Høje Taastrup Boulevard 23, DK-2630 Taastrup (DK).

(81) Designated States: AU, CA, CZ, FI, HU, JP, NO, NZ, PL, SK, US, European patent (AT, BE, CH, DE, DK, ES, FR, GB, GR, IE, IT, LU, MC, NL, PT, SE).

Published
With international search report.
In English translation (filed in Danish).

(54) Title: A ROLLER BLIND, PARTICULARLY FOR USE AS BLACKOUT SHADE

(57) Abstract

For a roller blind, particularly for use as a blackout shade, and with a spring-biassed roller bar and a blind (23) rolled on the roller bar and having along its lateral edges guide members (5, 6) guided in tracks in guide rails disposed at both sides of the window opening, and a bottom bar, a brake device is provided for retaining the bottom bar (7) in an arbitrary position against the effect of said bias-force by means of a cord arrangement with a cord (9, 10) which at the bottom of one guide rail (5, 6) is passed through said guide rail, the bottom bar (7) and the other guide rail (6, 5) to a fixture means (17, 17′) at the top thereof. As friction means (14, 15, 14′, 15′) acting on the cord two pins (14, 15, 14′, 15′) are mounted in the bottom bar (7) over which the cord (9, 10) is passed in S-shape. To ensure parallel guidance of the bottom bar (7) in relation to the roller bar the cord arrangement may include two cords (9, 10) mounted in mirror-inversion.

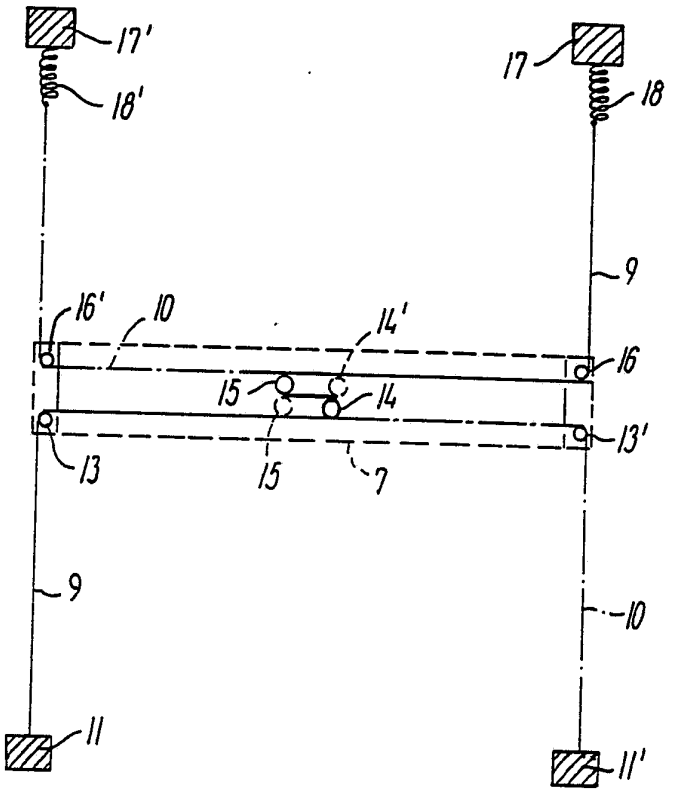

FOR THE PURPOSES OF INFORMATION ONLY

Codes used to identify States party to the PCT on the front pages of pamphlets publishing international applications under the PCT.

AT	Austria	FR	France	MR	Mauritania
AU	Australia	GA	Gabon	MW	Malawi
BB	Barbados	GB	United Kingdom	NL	Netherlands
BE	Belgium	GN	Guinea	NO	Norway
BF	Burkina Faso	GR	Greece	NZ	New Zealand
BG	Bulgaria	HU	Hungary	PL	Poland
BJ	Benin	IE	Ireland	PT	Portugal
BR	Brazil	IT	Italy	RO	Romania
CA	Canada	JP	Japan	RU	Russian Federation
CF	Central African Republic	KP	Democratic People's Republic of Korea	SD	Sudan
CG	Congo			SE	Sweden
CH	Switzerland	KR	Republic of Korea	SK	Slovak Republic
CI	Côte d'Ivoire	KZ	Kazakhstan	SN	Senegal
CM	Cameroon	LI	Liechtenstein	SU	Soviet Union
CS	Czechoslovakia	LK	Sri Lanka	TD	Chad
CZ	Czech Republic	LU	Luxembourg	TG	Togo
DE	Germany	MC	Monaco	UA	Ukraine
DK	Denmark	MG	Madagascar	US	United States of America
ES	Spain	ML	Mali	VN	Viet Nam
FI	Finland	MN	Mongolia		

A ROLLER BLIND, PARTICULARLY FOR USE AS BLACKOUT SHADE.

The invention relates to a roller blind, particularly for use as a blackout shade, comprising a spring-biassed roller bar designed to be mounted at the top of a window opening and a blind rolled on the roller bar and having along its lateral edges guide members guided in tracks provided in guide rails disposed at both sides of the window opening, a bottom bar for the blind being likewise provided, at both ends, with guide means engaging guideways in said guide rails, and being further controlled by means of a cord arrangement with a cord which from a fixture means at the bottom of one guide rail is passed through the part of said guide rail positioned beneath the bottom bar, the bottom bar itself, and the part of the other guide rail positioned above the bottom bar, to a fixture means at the top of the other guide rail.

In roller blinds to be mounted in connection with skylights in inclined roofs use is made of a spring-biassed roller bar ensuring that the blind is kept tight in all positions between the completely raised position and the maximum drawn bottom position.

In order to enable the bottom bar to be arrested in its bottom position and in a number of intermediate positions it is known to mount side rails along the longitudinal sides of the window frame, the side rails being provided with downwards facing recesses for engagement with pins or the like at the ends of the bottom bar. This makes it possible to retain the bottom bar in a limited number of intermediate positions.

Such comparatively simple side rails are, however, not usable in connection with blinds for blackout shades of the above mentioned type, in which the side guide rails must be designed so as to ensure light-proofness at the edges of the window. At the top

and at the bottom of the window opening light-proofness is obtained by providing the roller bar, which is most frequently enclosed in a cassette, as well as the bottom bar with appropriate sealing strips.

In US-A-785 806 a roller blind of the above mentioned type is disclosed in which the movement of the bottom bar is controlled by a double cord arrangement ensuring parallel guidance of the bottom bar in relation to the roller bar, thereby preventing the bottom bar from getting jammed due to careless operation.

In comparison with the prior art it is the object of the invention to provide a design of a roller blind, particularly for blackout shading, which makes it possible to retain the bottom bar against the spring bias force exerted on the roller bar in arbritrary positions between the top position and the bottom position.

With a view to this, a roller blind of the above mentioned type is characterized in that a brake device for retaining the bottom bar in an arbitrary position against the effect of said spring bias includes a friction member mounted in the bottom bar and acting on the cord, a device for tightening the cord being provided in association with one of said fixture means.

With such a comparatively simple frictional brake device it has turned out to be possible to obtain a braking force which in any position of the bottom roller is sufficient to equalize the spring bias force. As it appears from the following the frictional brake device may be made to cooperate with the cord tightening member and the spring bias of the roller bar in such a manner that the brake force does not reduce the operational comfort.

In a preferred embodiment of the invention the means for parallel guidance include a supplementary cord arrangement passed through the guide rails and the

bottom part, in reverse mounting in relation to said cord.

The invention will now be explained in detail with reference to the schematical drawings, in which

Fig. 1 shows a skylight equipped with a roller blind as a blackout shade, provided according to an embodiment of the invention,

Fig. 2 is a cross-section of a side guide rail,

Fig. 3 is a schematical diagram of a brake device and a device for parallel guidance with two mirror-inverted cord arrangements, and

Figs 4 and 5 illustrate a holder for friction members for the two cord arrangements, designed to be mounted in the bottom bar of the roller blind.

In the roller blind for a blackout shade illustrated in Fig. 1 a spring-biassed roller bar, not shown in detail, is enclosed in a cassette 1 mounted atop the window opening in such a manner that it fits light-proof to the window main frame. A blind 2 of light-proof material is rolled on the roller bar. Guide members, e.g. in the form of semispherical buttons 3 which, as illustrated in Fig. 2, are guided in tracks 4 provided in guide rails 5 and 6 disposed at either side of the window opening are in a manner known per se spaced apart along both of the lateral edges of the blind 2, at distances which may for instance vary from 3 to 10 cm.

At the bottom the blind is fastened in a bottom bar 7 having guide means at the ends, likewise engaging guideways 8 in the guide rails 5 and 6.

Since due to the spring bias acting on the roller bar the blind is constantly biassed in the raising direction in order to be kept tightened, an arresting mechanism is needed to retain the drawn blind 2 in the bottom position of the roller bar 7 as well as in intermediate positions.

In order to obtain an stepless variable arresting in arbitrary positions of the bottom bar 7, said arresting mechanism includes a brake device of which an embodiment is illustrated in Fig. 3.

In this case the brake device comprises a mirror-inverted arrangement of two cords 9 and 10, of which the cord 9 shown in solid lines in the figure is passed from a fixture means 11 at the bottom of the left guide rail 5 up through a track 12 in this guide rail, shown in Fig. 2, and over a roller or pin 13 through the bottom bar 7 in which a friction member acting on the cord in the illustrated embodiment includes two pins 14 and 15 around which the cord is passed in S-shape and from there further on to the opposite end of the bottom bar 7, from where it is passed over a roller or pin 16 through the part of the guideway 12 positioned above the bottom bar 7 of the right slotted guide 6 to a fixture means 17 at the top of said slotted guide.

The fixture means 11 and 17 may appropriately be provided in retaining means, e.g. a plastic plug, that may be inserted at the bottom of the guide rail 5 and a clip-like plug that may be mounted at the top of the guide rail 6. With the view of tightening the cord 9, the upper end thereof is connected with a tension spring 18 mounted in the fixture means 17.

As mentioned above, the cord 10 is mirror-inverted in relation to the cord 9, and the fixture and cord guiding means for this cord have the same reference numerals as the corresponding members for the cord 9, but further marked with an apostrophe.

This double cord arrangement provides for obtaining both an effective braking capable of retaining the bottom bar 7 arrested in an arbitrary position between the top and the bottom, and an accurate parallel guidance of the bottom bar 7 in relation to the roller bar mounted in the cassette 1.

The braking effect is caused by the S-shaped twisting of the cords 9 and 10, respectively, around the pins 14, 15 and 14', 15', respectively, the friction between the cords and said pins and the tension exterted by the springs 18 and 18'.

As regards the equilibrium as to force of the system the following formula applies to both of the cords 9 and 10

$$S_1 = S_2 \cdot e^{\mu \cdot \alpha}$$

wherein S_1 and S_2 are the cord tension before and after the cord is passing the pins 14, 15 and 14', 15', respectively, μ is the friction of each cord against the actual pin, and α is the total of the angle changes of the two entwinements of each cord, in this case 360°.

The illustrated S-shaped cord path represents only an embodiment, because reversal of direction may be effected by means of a single pin around which the cord may be passed in an entwinement of 360°. This, however, involves the inconvenience that the cord when running off the pin will slide against itself, thereby being exposed to more wear than in the illustrated example with two entwinements of 180°.

It is apparent that the braking force may be controlled by choosing a larger number of pins, other angle changes of the cord entwinement round the individual pins and stronger or weaker springs. By these means the braking force is easily dimensioned so that the bottom bar may be safely retained in arbitrary positions. Experiments have shown that the embodiment illustrated in Fig. 3 allows the cords to stand far more than 10,000 raisings and drawings of the blind with no substantial wear and deterioration of the braking effect.

At the same time the cooperation of the frictional brake device with the springs 18, 18' and the

spring bias in the roller bar, not shown, entail that the braking force does not hamper the operation of the blind. At a pull downwards at the bottom bar 7 the cord tension between the bottom bar 7 and the springs 18, 18' suddenly increases due to the brake device, whereas the cords between the brake roller 7 and the fixture means 11, 11' slacken, thereby causing the braking effect to decline so that the blind may easily be drawn. When the blind is raised the full braking force from the brake device must incidentally be overcome but the raising movement is supported by the spring bias of the roller bar.

The cord inverting arrangement in the bottom bar may advantageously be provided in that the pins 14, 15 and 14', 15', respectively, are mounted in a common holder 19 design for being fixed in the bottom bar 7, as illustrated in Figs 4 and 5. In this holder the cord paths for the cords 9 and 10 are separated by a partition wall 20 and in contradiction to the schematical illustration in Fig. 3 the reversal of both cord paths is provided by means of two common pins 21 and 22 extending through the holder 19 on both sides of the partition wall 20.

The invention is not restricted to the illustrated design of the brake device with an arrangement of reversal for the cords, the braking force being achieved with other designs of the friction members acting on the cords.

If the parallel guidance of the bottom bar 7 is ensured in another way, a double cord arrangement is neither necessary, even though this must be supposed to allow the simplest design.

The applicability of the invention is not restricted to blinds for blackout shades but may include any form of roller blind with a constantly spring-biassed blind for which it is desired to have the possibility of arresting in arbitrary positions.

PATENT CLAIMS

1. A roller blind, particularly for use as blackout shade, comprising a spring-biassed roller bar designed to be mounted at the top of a window opening and a blind rolled on the roller bar and having along its lateral edges guide members (3) guided in tracks (4) provided in guide rails (5, 6) disposed at both sides of the window opening, a bottom bar (7) for the blind (2) being likewise provided, at both ends, with guide means engaging guideways (8) in said guide rails (5,6), and being further controlled by means of a cord arrangement with a cord (9, 10) which from a fixture means (11, 11') at the bottom of one guide rail (5, 6) is passed through the part of said guide rail positioned beneath the bottom bar (7), the bottom bar (7) itself, and the part of the other guide rail (6, 5) positioned above the bottom bar (7), to a fixture means at the top of the other guide rail,
characterized in that a brake device for retaining the bottom bar (7) in an arbitrary position against the effect of said spring bias includes a friction member (14, 15, 14', 15') mounted in the bottom bar (7) and acting on the cord, a device (18, 18') for tightening the cord (9, 10) being provided in association with one of said fixture means.

2. A roller blind as claimed in claim 1, characterized in that the friction member includes a reversing member for the cord, firmly mounted in the bottom bar (7).

3. A roller blind as claimed in claim 2, characterized in that said reversing member comprises two pins (14, 15, 14', 15') disposed in the bottom bar and over which the cord (9, 10) is passed in S-shape.

4. A roller blind as claimed in claim 3, characterized in that the two pins (14, 15, 14', 15') are provided in a common holder (19) to be mounted in the bottom bar (7).

5. A roller blind as claimed in any of the preceding claims, characterized in that said fixture means (11, 17, 11', 17') for the cord (9, 10) are provided in retaining means to be inserted in respective ends of the two guide rails (5, 6).

6. A roller blind as claimed in claim 5, characterized in that the cord tightening member (17, 17') consists of a tension spring (18, 18') mounted in one of said fixture means (17, 17') and connected with the actual cord end.

7. A roller blind as claimed in any of the preceding claims, in which the cord arrangement for ensuring parallel guidance of the bottom bar (7) in relation to the roller bar includes two cords (9, 10) passed through the guide rails (5, 6) and the bottom bar (7) in reverse mounting,
characterized in that said holder (19) as the friction member for both cords (9, 10) includes two common reversing pins (21, 22), and that the holder is provided with a partition wall (20) for separating the two cord paths.

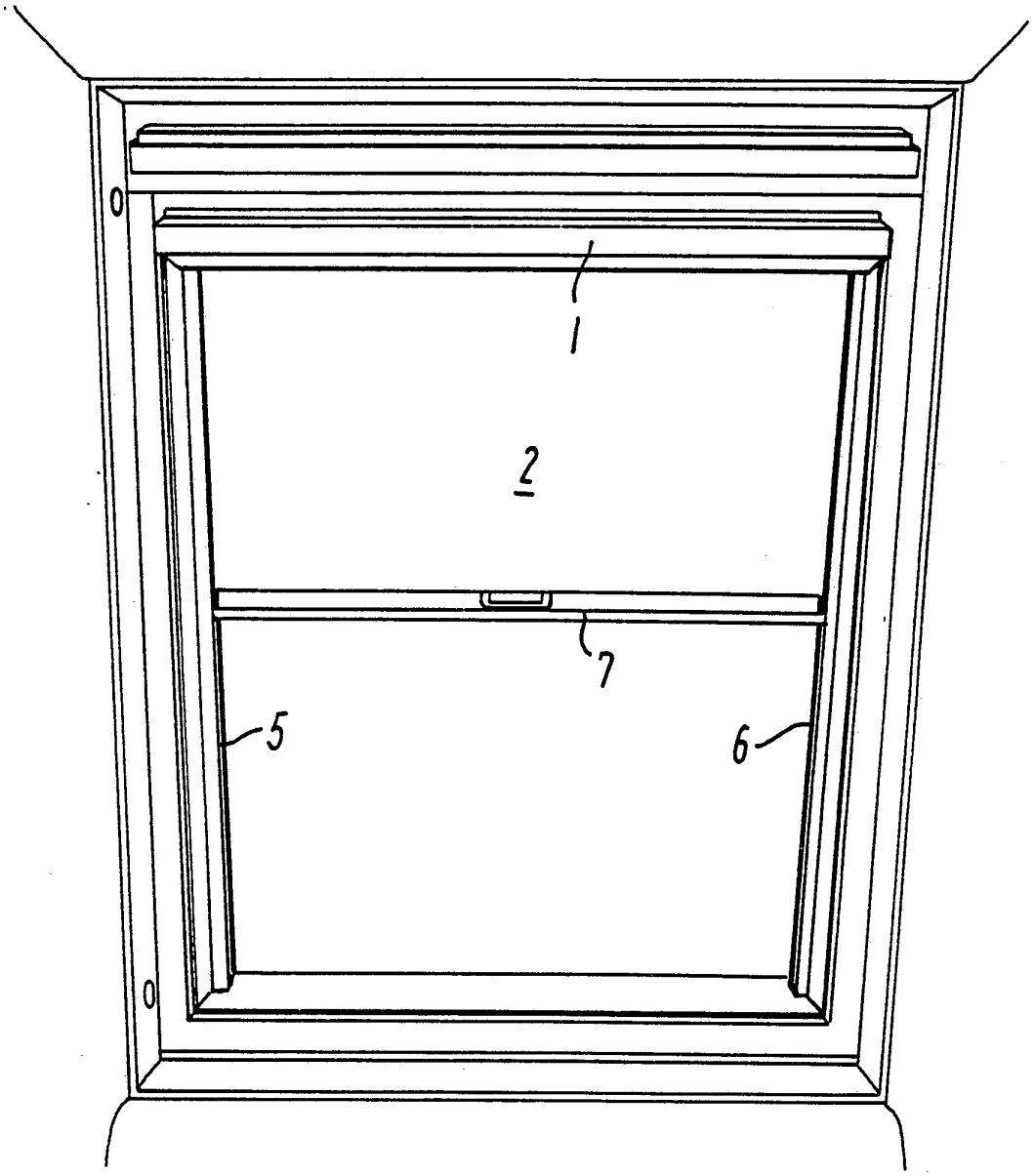

FIG. 1

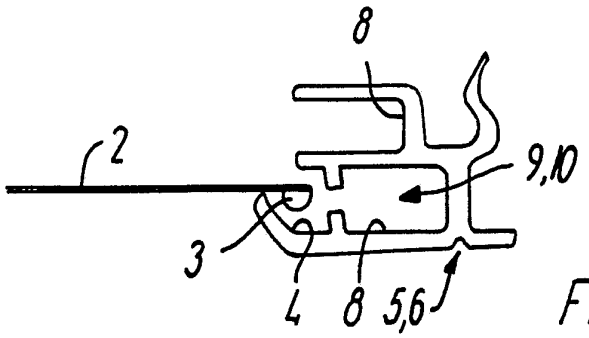

FIG. 2

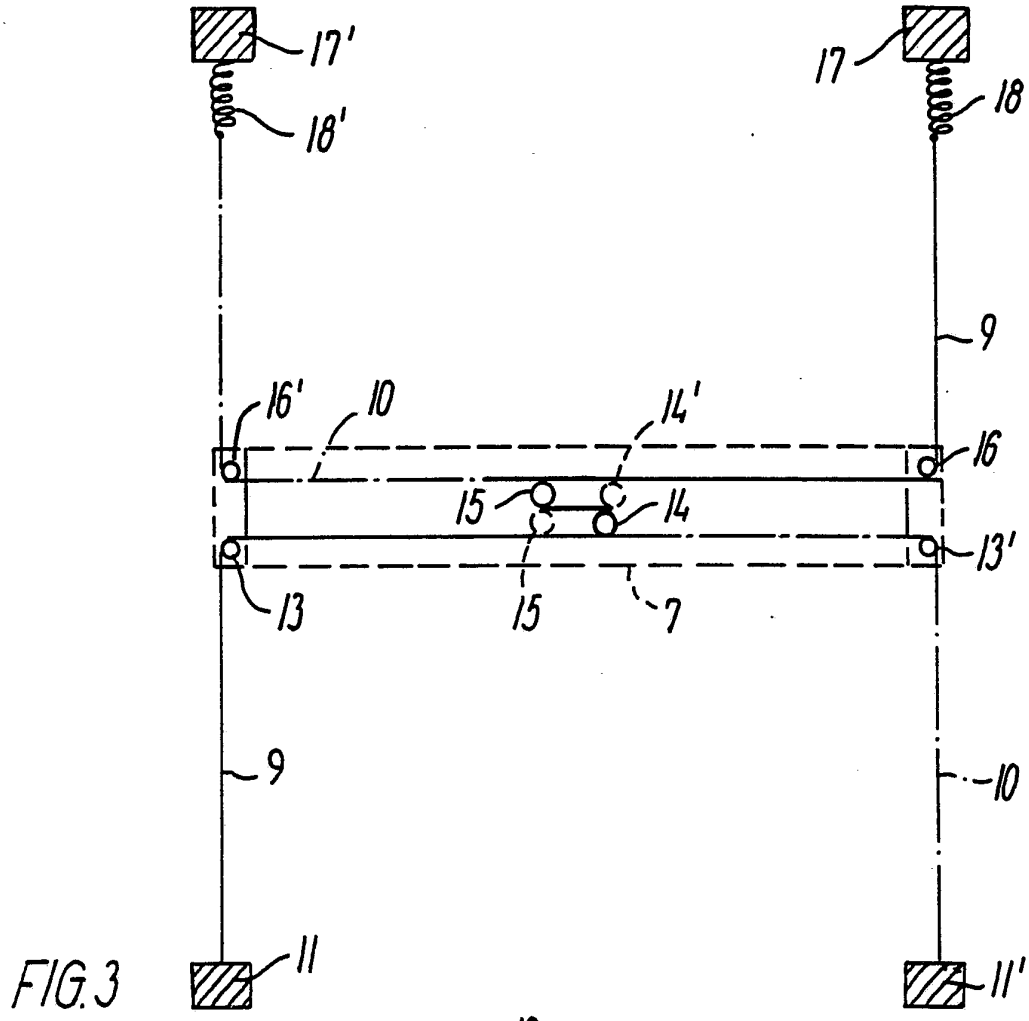

FIG. 3

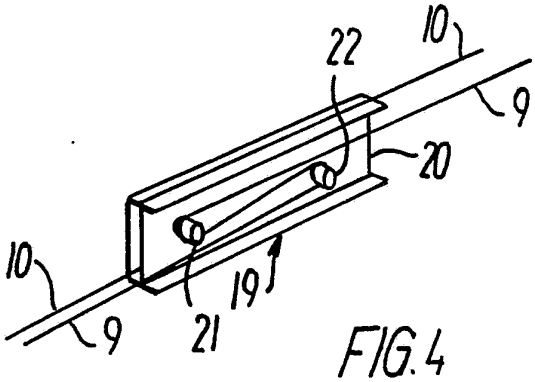

FIG. 4

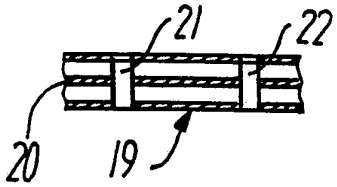

FIG. 5

INTERNATIONAL SEARCH REPORT

International application No.
PCT/DK 93/00090

A. CLASSIFICATION OF SUBJECT MATTER

IPC5: E06B 9/42, E06B 9/56
According to International Patent Classification (IPC) or to both national classification and IPC

B. FIELDS SEARCHED

Minimum documentation searched (classification system followed by classification symbols)

IPC5: E06B

Documentation searched other than minimum documentation to the extent that such documents are included in the fields searched

SE,DK,FI,NO classes as above

Electronic data base consulted during the international search (name of data base and, where practicable, search terms used)

ORBIT

C. DOCUMENTS CONSIDERED TO BE RELEVANT

Category*	Citation of document, with indication, where appropriate, of the relevant passages	Relevant to claim No.
X	US, A, 785806 (C.L. HOPKINS), 28 March 1905 (28.03.05), page 2, column 1, line 21 - column 2, line 75	1
	--	
X	FR, A1, 2615240 (ETABLISSEMENTS FARNIER ET PENIN, SOCIETE ANONYME), 18 November 1988 (18.11.88), page 3, line 10 - page 4, line 11, figure 1	1
	--	
A	US, A, 794937 (C.L. HOPKINS), 18 July 1905 (18.07.05), page 1, column 2, line 93 - page 2, column 1, line 17	1
	--	

[X] Further documents are listed in the continuation of Box C. [X] See patent family annex.

* Special categories of cited documents:
"A" document defining the general state of the art which is not considered to be of particular relevance
"E" erlier document but published on or after the international filing date
"L" document which may throw doubts on priority claim(s) or which is cited to establish the publication date of another citation or other special reason (as specified)
"O" document referring to an oral disclosure, use, exhibition or other means
"P" document published prior to the international filing date but later than the priority date claimed
"T" later document published after the international filing date or priority date and not in conflict with the application but cited to understand the principle or theory underlying the invention
"X" document of particular relevance: the claimed invention cannot be considered novel or cannot be considered to involve an inventive step when the document is taken alone
"Y" document of particular relevance: the claimed invention cannot be considered to involve an inventive step when the document is combined with one or more other such documents, such combination being obvious to a person skilled in the art
"&" document member of the same patent family

Date of the actual completion of the international search	Date of mailing of the international search report
11 June 1993	15 -06- 1993
Name and mailing address of the ISA/ Swedish Patent Office Box 5055, S-102 42 STOCKHOLM Facsimile No. +46 8 666 02 86	Authorized officer Thorunn Grenmark Telephone No. +46 8 782 25 00

Form PCT/ISA/210 (second sheet) (July 1992)

INTERNATIONAL SEARCH REPORT

International application No.
PCT/DK 93/00090

C (Continuation). DOCUMENTS CONSIDERED TO BE RELEVANT

Category*	Citation of document, with indication, where appropriate, of the relevant passages	Relevant to claim No.
A	FR, A1, 2642466 (LON JESNE ET AL), 3 August 1990 (03.08.90), figure 10 ---	1
A	FR, A1, 2663675 (CROS STORE ZENITH), 27 December 1991 (27.12.91), figure 1 --- --------	1

INTERNATIONAL SEARCH REPORT

Information on patent family members

30/04/93

International application No.
PCT/DK 93/00090

Patent document cited in search report	Publication date	Patent family member(s)	Publication date
US-A- 785806	28/03/05	NONE	
FR-A1- 2615240	18/11/88	NONE	
US-A- 794937	18/07/05	NONE	
FR-A1- 2642466	03/08/90	NONE	
FR-A1- 2663675	27/12/91	NONE	