United States Patent

Gray

[15] 3,637,132

[45] Jan. 25, 1972

[54] PRESSURE RELEASE PACKAGE OR CONTAINER

[72] Inventor: Oscar S. Gray, c/o Gray Industries, Inc., P. O. Box 23518, Fort Lauderdale, Fla. 33307

[22] Filed: Jan. 9, 1970

[21] Appl. No.: 1,741

[52] U.S. Cl. ..... 229/53, 99/171 H, 215/1 R, 206/46 F, 229/DIG. 14

[51] Int. Cl. B65d 33/00

[58] Field of Search ..... 229/DIG. 14, 53, 62.5, 66; 99/171 H, 171 S, 214; 206/46 F, 63.2 R; 150/1, 9; 215/56; 220/44 R

[56] References Cited

UNITED STATES PATENTS

2,726,002	12/1955	Dalianis	215/56 X
2,361,344	10/1944	Yates	229/DIG. 14
2,633,284	3/1953	Moffett	229/DIG. 14
3,323,442	6/1967	Rader	229/DIG. 14
3,357,632	12/1967	Stanforth	229/62.5
3,432,087	3/1969	Costello	229/62.5
3,502,487	3/1970	Byrd	229/62.5 X

Primary Examiner—Donald F. Norton

Attorney—Howson and Howson

[57] ABSTRACT

A container having a sealed compartment, means defining a pressure release channel communicating with said compartment and at least one rupturable dam in said channel to vent said compartment when the pressure in said compartment reaches a predetermined level.

8 Claims, 9 Drawing Figures

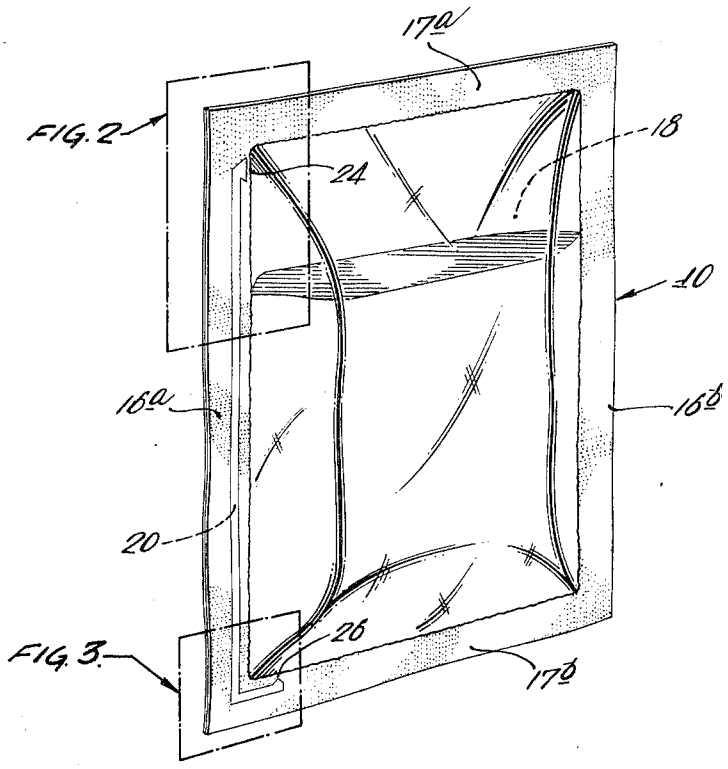

FIG. 1.

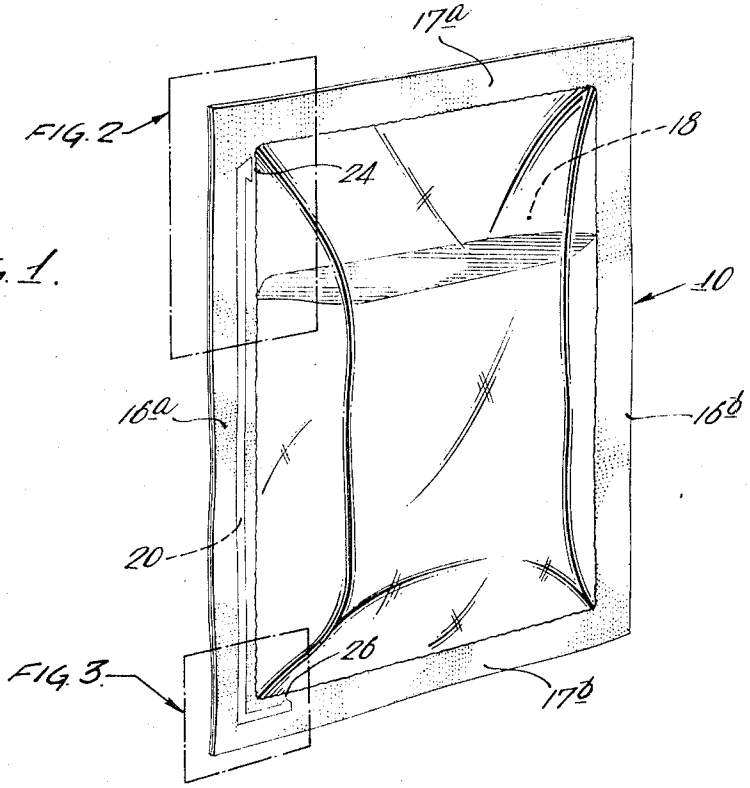

FIG. 2.

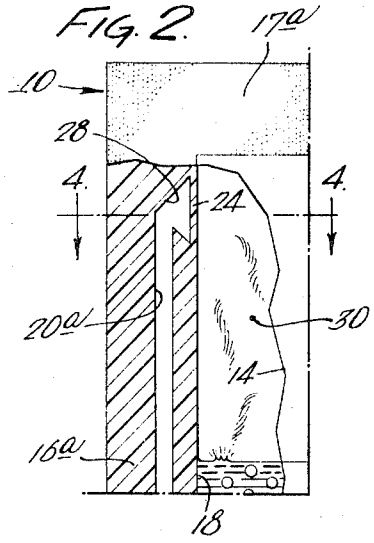

FIG. 5.

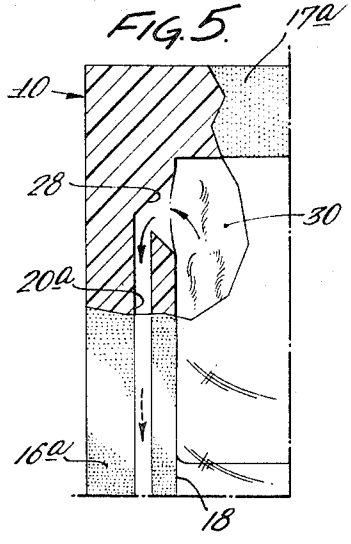

FIG. 4.

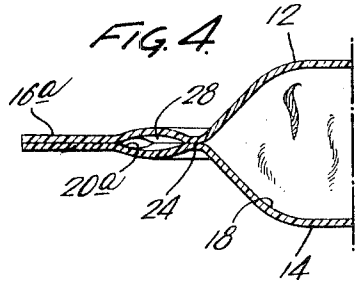

FIG. 7.

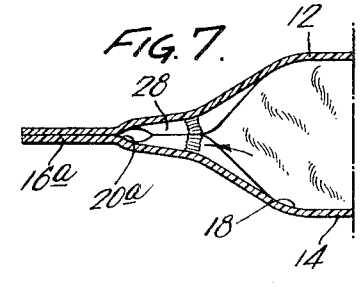

FIG. 3.

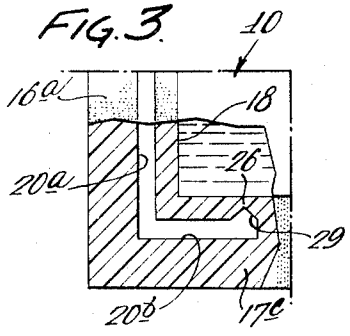

FIG. 6.

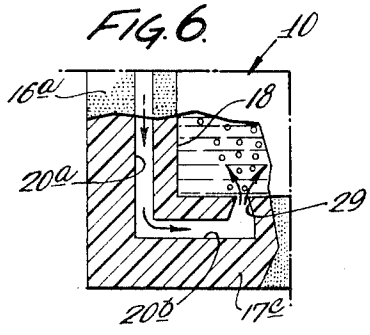

INVENTOR:
OSCAR S. GRAY
BY Howson & Howson
ATTYS.

FIG. 8.

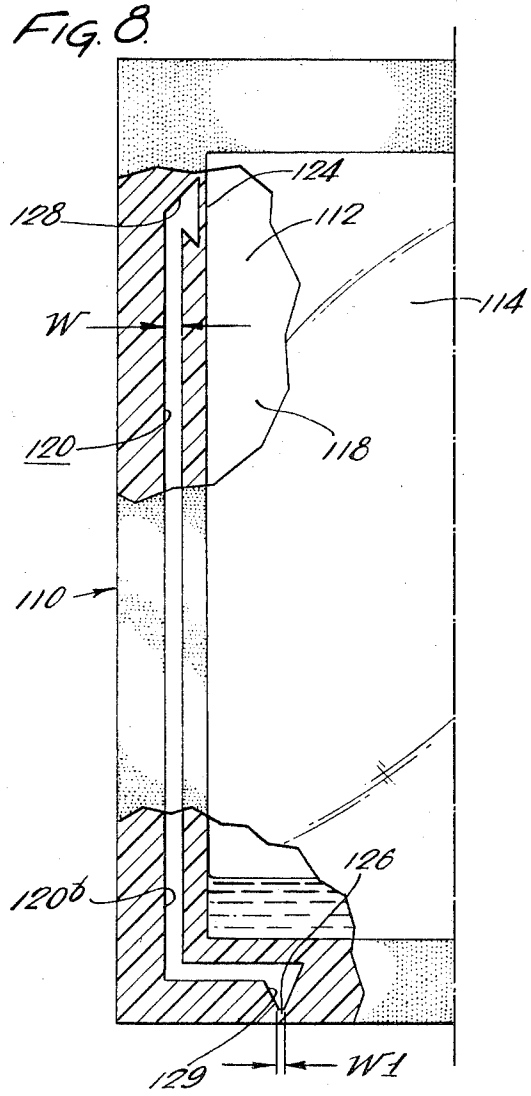

FIG. 9.

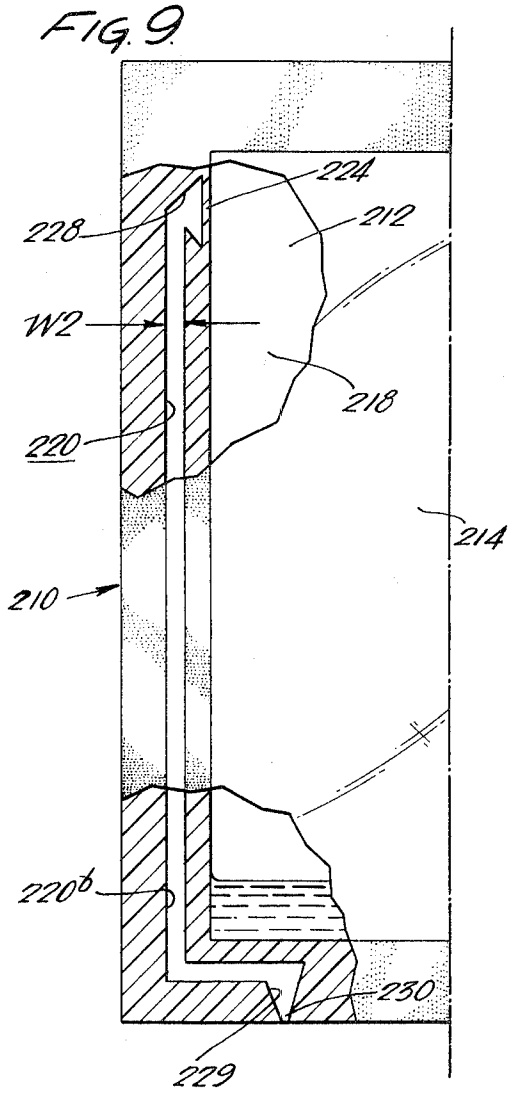

INVENTOR:
OSCAR S. GRAY

BY Howson & Howson
ATTYS.

PRESSURE RELEASE PACKAGE OR CONTAINER

The present invention relates broadly to containers, and more particularly to containers having pressure release means.

The present invention relates particularly to packages for moisture-containing materials or the like. Some of these packages are in the form of envelopes or the like consisting of a pair of members made of a flexible material which are heat sealed about their periphery to form a compartment for the contents. The package and its contents are subjected to heat to cook or otherwise prepare for consumption, in the case of food, or to pasteurize, sterilize or otherwise control micro-organisms and enzymes as disclosed in my copending applications Ser. Nos. 649,640 filed June 28, 1967, 688,260 filed Dec. 5, 1967, 716,479 filed Mar. 27, 1968 (now U.S. Pat. Nos. 3,494,722, 3,494,723, and 3,494,724, and 817,181 filed Apr. 17, 1969. One of the problems, however, is the fact respectively that in some instances when these packages are subjected to a high temperature, gases are generated, for example, by vaporization of moisture, which could rupture the container. This, of course, is undesirable since the rupture may result in loss of some of the contents and, in some instances, loss of flavor in the case of food, or exposing the contents to the atmosphere resulting in contamination.

In a specific embodiment particulariy adapted for sterilizing hardware, like medical instruments, using microwave energy, it is necessary that a vaporizable liquid, like moisture, be in the package during treatment with the microwaves but undesirable to retain the liquid, particularly water, in the package after sterilization. Hence, means should be provided to permit escape of the moisture without rupturing the package in such a way that the contents are exposed to the atmosphere.

The present invention is designed as an improvement in packages or containers of this type and broadly provides means in the form of a so-called pressure release channel which is normally sealed from the main compartment of the container housing the contents by means of at least one rupturable dam. Preferably, one end of the channel communicates with the head space in the compartment and the opposite end of the channel at the lower end of the compartment or package. By this arrangement when the package is subjected to high temperatures, gases are generated by vaporization of moisture whereby pressure builds up in the head space of the package. Pressure buildup will rupture the upper dam from the channel adjacent the head space to release the pressure and condensing vapors. The dam at the lower end of the package also ruptures to permit the hot vapors to enter the lower portion and aid in heating the product since it has been found that the lower portion is cooler than the area in the head space. Accordingly, the present invention serves a twofold purpose. The channel and dam arrangement minimizes the possibility of rupturing the package by buildup of vapor pressure thus eliminating the problem of escape of contents or loss of flavor. Additionally, transfer of the vapors from the head space in the lower part of the package aids in heating the contents.

These and other objects of the present invention and the various features and details of the construction thereof are hereinafter more fully set forth with reference to the accompanying drawing, wherein:

FIG. 1 is a perspective view of a package having pressure release means constructed in accordance with the present invention;

FIG. 2 is an enlarged fragmentary view partially in section to show the specific details of the upper portion of the pressure release channel and rupturable dam adjacent the heat space of the package;

FIG. 3 is a view similar to FIG. 2 showing a portion of the pressure release channel and the rupturable dam adjacent the lower part of the package;

FIG. 4 is a sectional view taken on lines 4—4, FIG. 2;

FIG. 5 is a view similar to FIG. 2 showing the dam adjacent the head space ruptured;

FIG. 6 is a view similar to FIG. 3 showing the lower dam ruptured by transfer of pressure through the channel;

FIG. 7 is a sectional view similar to FIG. 4 showing the configuration of the package after rupture of the upper dam;

FIG. 8 is an enlarged fragmentary view of another embodiment of pressure release package in accordance with the present invention;

FIG. 9 is an enlarged fragmentary view of still another embodiment of pressure release package in accordance with the present invention.

Referring now to the drawing, there is illustrated a package or container generally designated by the numeral **10** having pressure release means constructed in accordance with the present invention. The package as illustrated comprises two opposing sheet members **12** and **14** made of a thin flexible material secured about their entire peripheral edges to define a pocket or cavity **18** for the contents, for example, a food product or the like. In the present instance the packages are of generally rectangular configuration having parallel heat-sealed side edge portions **16*a***, **16*b*** and top and bottom heat-sealed edge portions **17*a***, **17*b***. It is to be noted that the package may take other geometric forms.

The package **10** may be made of a variety of flexible materials found suitable for the particular product for which it is used. For example, polyethylene, polyvinylidene chloride, polyethylene terephthalate, or other plastic materials have been found as a suitable material. These materials can be heat sealed by application of heat and pressure to weld the sheets together at their peripheral edge as the illustrated embodiment. It is noted, however, that other means of securing the package at its periphery may be employed to provided a hermetically sealed compartment for the contents.

In accordance with the present invention, pressure release means is provided which is in the form of a channel **20** having a vertical leg portion **20*a*** in the side edge **16*a*** of the package and a horizontal lower leg **20*b*** extending along the bottom edge **17*b*** of the package. In the present instance, the channel **20** is located in the heat-sealed edge of the package and may be formed by a conventional means during heat sealing of the edges. The upper terminal end of the leg **20*a*** of the channel has a rupturable dam **24** and the lower leg **20*b*** similarly has a rupturable dam **26**. These dams are formed simply by heat sealing of the sheets in this area of the package. Note that in the present instance the vertical leg **20*a*** of the channel preferably terminates in a flared terminal end portion as at **28** and the horizontal leg **20*b*** preferably terminates in a converging portion as at **29** so that the upper dam wall is wider than the lower dam wall. This preferred construction facilitates easy preferential rupture of dam **24** under the conditions existing in head space **30**, followed by rupture of dam **29** under the conditions existing at the bottom of the contents of the package.

Considering the use of the package in connection with the storing of moisture-containing material, the sheets **12** and **14** are placed in overlying confronting relation and heat sealed along their side and bottom edges in a manner to provide the pressure release channel and the rupturable dams **24** and **26**. The food or other moisture-containing material is then inserted into the open upper end of the package to the level, for example, as indicated in FIG. **1**. Thereafter, the upper edge is heat sealed to hermetically seal the package. Now when the contents of the package are heated, and pressure develops in the head space **30** by reason of gas generated by moisture vaporization, the upper dam **24** ruptures to relieve the pressure and permit the vapors to travel in the channel to the lower portion and rupture the lower dam **26**. It is noted that this prevents rupture of the package and consequent loss of flavor or product and, as stated previously, serves to transfer the hot vapors to the lower portion of the package which it has been found is cooler than the head space. Thus, the transfer of hot vapors serves also to heat the food product uniformly. Note that the rupturable dams normally seal the channel until the pressure buildup in the head space reaches a predetermined level.

There is illustrated in FIG. 8 a modified form of pressure release package constructed in accordance with the present invention. As may be readily seen, the package **110** is generally similar in overall configuration and construction to that described above, comprising opposing sheet members **112** and **114** of a thin flexible material joined at their peripheral edges to define a pocket or cavity **118** for the product and a pressure release channel **120** located, in the present instance, in one side edge of the package. The upper end of the channel **120** is flared as at **128** defining a rupturable dam **124** adjacent the upper portion of the pocket **118**, for example polyethylene, polyvinylidene chloride, polyethylene terephthalate, or other plastic materials which can be heat sealed by application of heat and pressure have been found as suitable for the sheet members **112** and **114**.

The modified package **110** is particularly adapted for use in packaging sterilized products, for example medical instruments or the like. To this end, the lower leg **120***b* of the pressure release channel terminates in a converging end portion as at **129** which, in the present instance, faces downward to define a dam **126** at the lower edge of the package. By this arrangement rupture of the dams, due for example to pressure increase in the pocket **118**, establishes fluid communication with the atmosphere through the channel **120**. The channel **120** is preferably of a width W of about three-sixteenths to about three-eighths inch and the width W **1** of the dam **126** is preferably less than W. Channel **120** is self-sealing by external atmospheric pressure when a vacuum is created in the pocket **118** when liquid has been expelled as its vapor from pocket **118** and the heating energy is discontinued.

Considering now briefly the use of the pressure release package in connection with the packaging of products such as medical instruments in a sterile condition, the flexible sheets **112** and **114** are joined along side and bottom edges, for example by heat sealing in a manner to form the pressure release channel **120** and the dams **124** and **126**. Thereafter, the instruments and a predetermined quantity of a vaporizable liquid are placed in the pocket through the open upper edges, these edges then being heat sealed to hermetically seal the package. The package with its contents is subjected, for example, to microwave energy whereby the liquid vaporizes and due to the increased internal pressure in the package, the dams **124** and **126** rupture permitting escape of the moisture to the atmosphere through the pressure release channel **120**. When all of the moisture is discharged, a vacuum is created in the channel **120** and pocket **118** whereby the atmospheric pressure closes and seals the channel **120** thereby effectively sealing the pocket **118** from the atmosphere and insuring that the contents of the package are sterile.

There is shown in FIG. 9 a further modified form of pressure release package **210** constructed in accordance with the present invention. This package is similar to that shown in FIG. 8 and comprises opposing sheet members **212** and **214** of a thin flexible material secured about their peripheral edges, for example for heat sealing to define a pocket or cavity **218** for the product and a pressure release channel **220**. The upper end of the channel **220** is flared as at **228** defining a rupturable dam **224**. In the present instance, the lower leg **220***b* of the channel **220** is convergent as at **229** and extends to the lower edge to define a discharge opening **230**. The channel **220** is preferably of a width W **2** of from about three-sixteenths to about three-eighths inch.

After the upper dams **124** and **224** of the packages of FIGS. **8** and **9** respectively are ruptured, the pressure release channel may be permanently sealed by application of heat and pressure to preclude during rough handling infiltration through the channel which may contaminate the contents of the package.

Similar to the package **110**, the package **210** described above is particularly adapted for use in packaging sterilized products such as medical instruments by the same procedure outlined above in connection with FIG. **8**. Additionally, even though the packages of FIGS. **8** and **9** were illustrated and described in connection with packaging of sterilized medical instruments, these packages have many other useful applications.

Even though the present invention has been illustrated and described in connection with a package or container made of a flexible material, the principle of the invention can be employed in other types of containers. For example, the container may be made of rigid material such as glass and be in the form of a jar in which event pressure release means may be in the form of a tube member having rupturable walls or dams at opposite ends communicating respectively with the head space in the jar and the bottom thereof. The container may be used for sterilization of products such as medical instruments similar to the package shown in FIGS. **8** and **9**, in which event the tube member has one end in communication with the atmosphere exteriorly of the container and is made of a construction so that it is collapsible and self-sealing when a vacuum is created in the container during the sterilization process.

While a particular embodiment of the present invention has been illustrated and described herein, it is not intended to limit the invention, and changes and modifications may be made therein within the scope of the following claims.

What is claimed is:

1. A container having a sealed compartment, means defining a pressure release channel communicating with said compartment, a rupturable dam at opposite ends of said channel to vent said compartment when the pressure in said compartment reaches a predetermined level and which upon rupturing establishes fluid communication at each end of said channel with said compartment.

2. A container having a sealed compartment defined by a pair of opposing sheet members made of thin flexible material secured about their entire peripheral edges, means defining a pressure release channel communicating with said compartment and formed in a side edge portion of said container, and at least one rupturable dam in said channel to vent said compartment when the pressure in said compartment reaches a predetermined level.

3. A container as claimed in claim **2** including a dam at opposite terminal ends of said channel, one end of said channel terminating in a flared terminal end portion adjacent one of said dams and the opposite end of said channel terminating in a converging portion adjacent the other dam whereby pressure buildup in said compartment ruptures said one dam prior to said other dam.

4. A container as claimed in claim **2** including a dam at each opposite end of said channel.

5. A container as claimed in claim **4** wherein one of said dams upon rupturing establishes communication between said compartment and said channel and the other of said dams establishes fluid communication between said channel and exteriorly of said container.

6. A container as claimed in claim **5** wherein the channel is preferably of a width of about three-sixteenths of an inch to about three-eighths of an inch and the width of said other dam is less than the width of said channel.

7. A container having a sealed compartment, means defining a pressure release channel communicating with said compartment and at least one rupturable dam in said channel to vent said compartment, said channel being of a predetermined configuration and cross section to close off said compartment when the pressure outside said compartment exceeds the pressure inside said compartment.

8. A container as claimed in claim **7** including a dam at opposite ends of said channel, one of said dams upon rupturing establishing fluid communication between said channel and compartment and the other of said dams upon rupturing establishing fluid communication between said channel and exteriorly of said container.

* * * * *