CALLINAN LAWRIE
Private Bag 7, Kew
Victoria 3101, Australia
Facsimile:
61 (3) 853.0062
61 (3) 853.0728

AUSTRALIA

PATENT

NOTICE OF ENTITLEMENT

We, **SPIRO MACHINES S.A.**, of Industriestrasse, P O B 3, CH-3178 Boesingen, Switzerland, being the applicant and the person nominated for grant of patent in respect of the Application for an invention entitled APPARATUS FOR CUTTING HELICALLY WOUND METAL TUBING
state the following:-

The person nominated for the grant of the patent has entitlement from the actual inventors by virtue of being a person who would, if a patent were to be granted upon an application made by the said inventors, be entitled to have the patent assigned to it; and is the applicant of the basic application.

The basic application listed on the request form and in the declaration made under Article 8 of the PCT is the first application made in a Convention country in respect of the invention.

Signature

4-11-93
Date

PATENT ATTORNEY
Executive Position

To: The Commissioner of Patents

AU9336402

(12) PATENT ABRIDGMENT (11) Document No. AU-B-36402/93
(19) AUSTRALIAN PATENT OFFICE (10) Acceptance No. 652690

(54) Title
APPARATUS FOR CUTTING HELICALLY WOUND METAL TUBING

International Patent Classification(s)
(51)[5] **B21C 037/12** **B23D 021/00** **B23D 021/14** **B23D 025/04**
B26D 003/16

(21) Application No. : **36402/93** (22) Application Date : **03.03.93**

(87) PCT Publication Number : **WO93/17803**

(30) Priority Data

(31) Number	(32) Date	(33) Country
9204917	**06.03.92**	**GB UNITED KINGDOM**

(43) Publication Date : **05.10.93**

(44) Publication Date of Accepted Application : **01.09.94**

(71) Applicant(s)
SPIRO MACHINES S.A.

(72) Inventor(s)
NILS ODDVAR SKREBERGENE; PAUL HARALD BRUDELI

(74) Attorney or Agent
CALLINAN LAWRIE , Private Bag 7, KEW VIC 3101

(56) Prior Art Documents
US 5074018
US 4823579
US 4706481

(57) Claim

1. A cutting apparatus for incorporation in a machine for the formation of helically wound metal tubing, comprising a mounting for supporting a forming head to which metal strip is to be advanced for winding helically into a tube, a carriage guided for longitudinal travelling movement along an axis intended to be parallel to the axis of tubing issuing from the forming head, a cantilever boom mounted to said carriage at one end, extending generally parallel to the axis of travel of said carriage and having at its free end a cutting blade extending in a plane generally normal to said axis, an extendible mounting guided on said carriage for movement in a direction normal to said axis and carrying a rotary shaft on which is mounted a cutting wheel arranged to cooperate with said cutting blade and likewise extending in a plane normal to said axis, and a driving motor mounted upon said carriage at a point remote from the mounting of said boom and laterally spaced from the path of tubing away from said forming head, a drive shaft of said motor being coupled to the shaft bearing said rotary cutting wheel by means of a universally jointed transmission shaft permitting extension of

.../2

said mounting, whereby said cutting wheel can be moved towards and away from said cutting blade between a position spaced from said blade and a position in which it overlaps said blade in order to penetrate the wall of a metal tube interposed therebetween.

OPI DATE 05/10/93 APPLN. ID 36402/93
AOJP DATE 09/12/93 PCT NUMBER PCT/GB93/00438

AU9336402

INTERNATIONAL APPLICATION PUBLISHED UNDER THE PATENT COOPERATION TREATY (PCT)

(51) International Patent Classification 5 :
B21C 37/12, B23D 21/14
B26D 3/16

A1

(11) International Publication Number: WO 93/17803

(43) International Publication Date: 16 September 1993 (16.09.93)

(21) International Application Number: PCT/GB93/00438

(22) International Filing Date: 3 March 1993 (03.03.93)

(30) Priority data:
9204917.0 6 March 1992 (06.03.92) GB

(71) Applicant *(for GB only)*: BUBB, Antony, John, Allen [GB/GB]; Gee & Co., Chancery House, Chancery Lane, London WC2A 1QU (GB).

(71) Applicant *(for all designated States except US)*: SPIRO MACHINES S.A. [CH/CH]; Industriestrasse, P.O.B. 3, CH-3178 Boesingen (CH).

(72) Inventors; and
(75) Inventors/Applicants *(for US only)* : SKREBERGENE, Nils, Oddvar [NO/NO]; Meierivegen 23, N-2800 Gjovik (NO). BRUDELI, Paul, Harald [NO/NO]; Bjornsonsgate 3, N-2800 Gjovik (NO).

(74) Agent: GEE & CO.; Chancery House, Chancery Lane, London WC2A 1QU (GB).

(81) Designated States: AU, BR, CA, FI, GB, JP, KP, KR, NO, US, European patent (AT, BE, CH, DE, DK, ES, FR, GB, GR, IE, IT, LU, MC, NL, PT, SE).

Published
With international search report.

652690

(54) Title: APPARATUS FOR CUTTING HELICALLY WOUND METAL TUBING

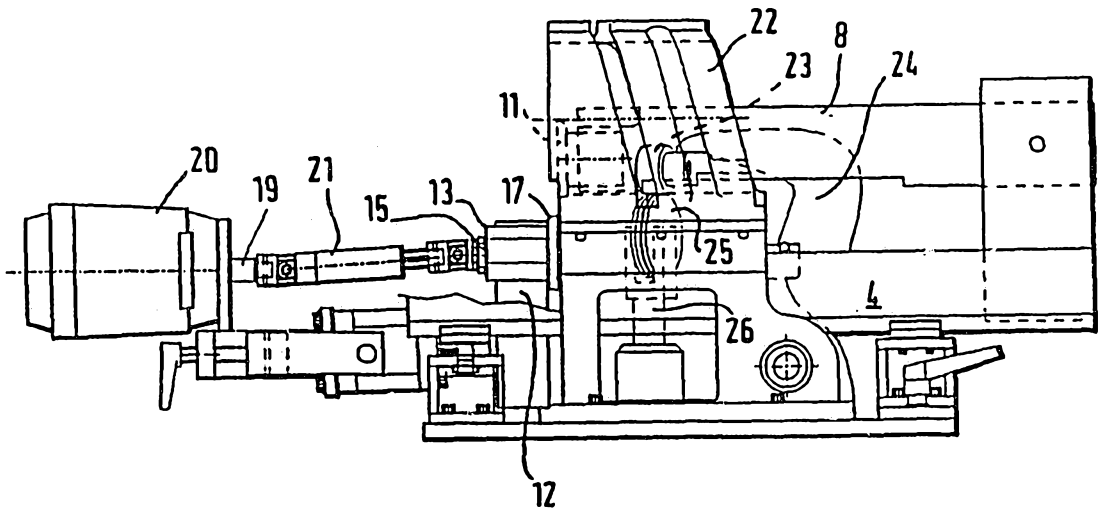

(57) Abstract

In a machine for the production of helically wound tubing from a metal strip, the said strip is advanced within a helical forming head (22) to form a metal tube, and a cutting apparatus for severing the tube as it issues from the forming head (22) comprises an internal cutting blade (11) mounted at the end of a boom (8) extending within the forming head (22), and a rotatable external cutting wheel (17) mounted upon a drive shaft (15) that is coupled to a driving motor (20) via a cardan shaft (21). An extendable pillar (12) is arranged to raise and lower the cutting wheel (17) relatively to the cutting blade (11) in order to cause the blades (11) and (17) to overlap and cut a metal tube. The boom (8), pillar (12) and motor (20) are all carried on a common carriage (4) that is axially movable relatively to the forming head (22) when the cutting wheel (17) penetrates the wall of the metal tube. The carriage (4) may move passively with the tubing or may be driven in synchronism therewith by means of a servo drive synchronised with the speed of advance of the metal strip that is to form the tubing.

APPARATUS FOR CUTTING HELICALLY WOUND METAL TUBING.

This invention concerns an apparatus for cutting helically wound metal tubing, and relates more especially to a cutting apparatus that can be installed within a machine for producing helically wound metal tubing to enable lengths of tubing to be severed as the tubing issues from the machine.

It is known to sever lengths of helically wound tubing as it issues from a machine by cutting means that is adapted to travel longitudinally with the moving tubing, in order to cut the tubing in a transverse plane. Such devices are known, for example, from U.S.A. Patents Nos. 157,966, 3,132,616 and 4,706,481.

In order to cut metal tubing of relatively light gauge metal sheet, for example of the kind formed from a helically wound strip, there can be used either a rotary slitting saw, or a pair of cooperating slitting wheels operating from the inside and outside of the pipe, one of the wheels being forced through the wall of the pipe to overlap the other so that the wall of the pipe is cut in a shearing action. Such a mechanism has now become commonplace in the domestic can-opener. A mechanism of this kind adapted for the cutting of the wall of a metal tube is known from U.S. Patent No. 4,054,067 and comprises cutting rollers, one of which is mounted for rotation on a boom arranged to extend within the hollow pipe, and the other of which is mounted externally of the pipe and guided for movement in a direction normal to the wall of the pipe in order to penetrate the latter and overlap the internal cutting roller.

Although such cooperating slitting wheels are normally driven to rotate when cutting, the application of such a cutting mechanism to a machine for the helical winding of metal tubing involves the difficulty that the association of the cutting wheels with a carriage arranged to travel relatively to the forming head of the machine cannot easily be achieved whilst maintaining a drive transmission to the shafts upon which the cutting wheels are

mounted.

Thus, for example, as described in U.S. Patent No. 4,706,481 it is proposed to dispense with any mechanism for driving the cutting wheels, and to leave them to rotate idly in contact with the metal tubing that rotates as it issues from the machine. Whilst such an arrangement has proved effective for cutting metal tubing having a relatively low wall thickness, it does have the disadvantage that additional stresses are placed upon the main drive of the machine that is required to advance the metal strip through the helical forming head, since the driving rollers contacting the metal strip are now required not only to drive the strip around the helical path defined by the forming head, but also to overcome the resistance to rotation of the tube due to the cutting mechanism.

It is accordingly an object of the present invention to overcome or at least reduce the above-mentioned disadvantage.

In accordance with the invention there is provided a cutting apparatus for incorporation in a machine for the formation of helically wound metal tubing, comprising a mounting for supporting a forming head to which metal strip is to be advanced for winding helically into a tube, a carriage guided for longitudinal travelling movement along an axis intended to be parallel to the axis of tubing issuing from the forming head, a cantilever boom mounted to said carriage at one end, extending generally parallel to the axis of travel of said carriage and having at its free end a cutting blade extending in a plane generally normal to said axis, an extendible mounting guided on said carriage for movement in a direction normal to said axis and carrying a rotary shaft on which is mounted a cutting wheel arranged to cooperate with said cutting blade and likewise extending in a plane normal to said axis, and a driving motor mounted upon said carriage at a point remote from the mounting of said boom and laterally spaced from the path of tubing away from said forming head, a drive shaft of said motor being coupled to the shaft bearing said rotary cutting wheel by means of a universally jointed transmission shaft permitting extension of said mounting, whereby said cutting wheel

can be moved towards and away from said cutting blade between a position spaced from said blade and a position in which it overlaps said blade in order to penetrate the wall of a metal tube interposed therebetween.

The arrangement according to the invention enables a driving motor to be coupled to the shaft of the rotary external cutting wheel without impeding the movement thereof and without obstructing the path of tubing from the forming machine. Rotary action of the shaft of the cutting wheel enables load on the main drive of the tube forming machine to be reduced, and the drive to the cutting wheel shaft is conveniently located away from the forming head so that there is no intrusion on space required for operational elements of the tube forming machine.

The cutting blade provided at the free end of the cantilever boom may be a fixed blade, or may be a cutting wheel mounted for passive rotation.

In accordance with a preferred feature of the invention the external cutting wheel may be arranged to undergo orbital motion so that it oscillates in a direction towards and away from the axis of the tubing while remaining in overlapping relationship with the cooperating cutting blade. This provides a more effective shearing action in some applications, for example in cutting tubing of heavier gauge. Thus the shaft bearing the cutting wheel may comprise a journal portion carried in a bearing of the extendible mounting and an eccentric crank portion on which the cutting wheel is mounted. When the cutting wheel is required to oscillate at high speed to produce a shearing action the orbital speed of the eccentric shaft will be greater than the corresponding circumferential speed of the tubing to be cut, in which case the cutting wheel is mounted to be freely rotatable on the crank portion of its shaft. Although the cutting wheel is not then positively driven by the shaft on which it is carried, the action of the driven eccentric crank portion will still be effective to reduce the load on the main drive of the tube forming machine, provided that the orbital motion is in the same direction as that of the motion of the tubing.

Further preferred features and advantages of the invention will become apparent from the following description taken in conjunction with the accompanying drawings, in which:

Fig. 1 is a perspective view of an apparatus in accordance with the invention for use in cutting helically wound metal tubes,

Fig. 2 is a side elevation of an apparatus as illustrated in Fig. 1,

Fig 3 is a view similar to Fig 2 showing the apparatus of the invention in conjunction with a tube forming machine, and

Figs 4 and 5 are fragmentary sectional views of alternative details of the apparatus of Figs 1 to 3.

Referring to Figs 1 and 2 of the drawings, a cutting apparatus in accordance with the invention comprises a main frame 1 providing a mounting for the forming head of a machine for forming helically wound metal tubing, for example so-called lock seam tubing. The elements of the tube forming machine are omitted from the drawing for clarity, but are of well known construction which will be familiar to one skilled in the art.

The main frame 1 comprises a base 2 upon which are located mountings 3 receiving a longitudinally slidable carriage 4. The carriage 4 is guided for longitudinal movement on the mountings 3 by precision anti-friction bearings of a type known for use in the carriages of machine tools and comprises a pair of slide members 5 that pass through apertures 6 in the main frame 1. The slide members 5 are coupled together at one end by a pillar 7 that carries a cantilever boom 8 extending parallel to the slide axis of the members 5 and are coupled together at the other end by a mounting 9 to be described below.

The boom 8 has at its free end a cylindrical recess, not illustrated, within which is clamped a mounting block 10, shown in exploded view in Fig 1, carrying a passively rotatable cutting wheel 11 extending in a plane normal to the axis of the boom 8.

As shown more clearly in Fig 4, the mounting 9 incorporates a pillar 12 carrying a hollow bush 13 within which is located a roller bearing 14. The bearing 14 in turn carries a rotary shaft 15 having an eccentric crank pin 16 on which is carried a rotatable cutting wheel 17 via a further roller bearing 18.

The pillar 12 is upwardly extendable from the position shown in Fig. 2 to a position in which the cutting wheel 17 overlaps the cutting blade 11, for example by means of a fluid pressure operated ram and toggle mechanism coupled to the mounting 9.

The shaft 15 is coupled to the drive shaft 19 of a motor 20 mounted to the left hand end of the carriage 4 as viewed in Fig 2, via a Cardan shaft 21 permitting vertical displacement of the shaft 15.

The carriage 4 is coupled to the main frame 1, via one of the slide members 5, by a servo mechanism 22 (Fig 1) by means of which it can be driven longitudinally relatively to the frame 1.

The operation of the apparatus will now be described in more detail, but firstly the relationship between the apparatus and a lock seam tube forming machine should be noted with reference to Fig 3, in which the reference numeral 22 indicates the conventional helical forming head of the machine, 23 is an upper clinching roller carried by a bracket 24 passing through a hollow in the boom 8, and 25 is a lower clinching roller carried in a vertically movable ram 26 mounted to the base 1.

As will be well understood by one skilled in the art of lock seam tube forming machines, metal strip is fed to the forming head 22 along an oblique axis indicated by the arrow B in Fig 1, and, after formation of the tubing in the head 22 it leaves the machine along a longitudinal axis indicated by the arrow C in Fig 1, to be taken up on a receiving table, not illustrated, located beyond the motor 20.

During normal operation of the tube forming machine, the carriage 4 is located in its right hand end position as illustrated in Fig.

1 and the pillar 12 is lowered so that the wall of the formed tubing can pass between the cutting blade 11 and the cutting wheel 17. When it is desired to sever a length of formed tubing, which may be measured by determining the length of a section of metal strip that has been fed to the machine, the main drive of the machine is stopped, the pillar 12 is extended upwards to force the cutting wheel 17 through the wall of the tubing until it overlaps the blade 11, and then the main drive of the machine is restarted to drive the tubing to rotate relatively to the cutters. At the same time, the driving motor 20 is switched on and the servo mechanism 22 is actuated to cause the carriage 4 to traverse to the left as viewed in Fig. 2 in synchronism with the movement of the tubing. If necessary the main drive of the machine is operated at a slower rate than during the normal production of the tubing. When the tubing has completed a full rotation and a section is severed by the cutters, the pillar 12 is lowered, the carriage 4 is returned to its right hand end position, the motor 20 is switched off and the normal operation of the tube forming machine is restored. As will be appreciated by one skilled in the art the relative timing of these actions can readily be controlled automatically by an appropriate microprocessor system.

Whilst one embodiment of the invention has been described by way of example, it will be appreciated that various alterations and modifications may be made to the arrangement as described and illustrated without departing from the scope of the invention.

Thus, where an orbital shearing action is unnecessary, for example when cutting lighter gauge metal, the cutting wheel 17 may be fixed directly to the shaft 15, the crank 16 and the bearing 18 being omitted, as shown in Fig 5.
Although the carriage 4 is driven by the servo mechanism 22 it would also be possible for the carriage to be advanced passively by pressure of the tubing on the cutting wheel 17, provided that means is provided to return the carriage to its starting position at the end of a cutting operation.

CLAIMS

1. A cutting apparatus for incorporation in a machine for the formation of helically wound metal tubing, comprising a mounting for supporting a forming head to which metal strip is to be advanced for winding helically into a tube, a carriage guided for longitudinal travelling movement along an axis intended to be parallel to the axis of tubing issuing from the forming head, a cantilever boom mounted to said carriage at one end, extending generally parallel to the axis of travel of said carriage and having at its free end a cutting blade extending in a plane generally normal to said axis, an extendible mounting guided on said carriage for movement in a direction normal to said axis and carrying a rotary shaft on which is mounted a cutting wheel arranged to cooperate with said cutting blade and likewise extending in a plane normal to said axis, and a driving motor mounted upon said carriage at a point remote from the mounting of said boom and laterally spaced from the path of tubing away from said forming head, a drive shaft of said motor being coupled to the shaft bearing said rotary cutting wheel by means of a universally jointed transmission shaft permitting extension of said mounting, whereby said cutting wheel can be moved towards and away from said cutting blade between a position spaced from said blade and a position in which it overlaps said blade in order to penetrate the wall of a metal tube interposed therebetween.

2. An apparatus according to Claim 1, wherein the cutting blade provided at the free end of the said cantilever boom is a cutting wheel mounted for passive rotation.

3. An apparatus according to Claim 1 or 2, wherein the said external cutting wheel is arranged to undergo orbital motion so that it oscillates in a direction towards and away from the axis of the tubing while remaining in overlapping relationship with the cooperating cutting blade.

4. An apparatus as claimed in Claim 3, wherein the said external cutting wheel is mounted on an eccentric crank portion of said rotary shaft.

5. A cutting apparatus as claimed in Claim 4, wherein the said cutting wheel is freely rotatably mounted upon said eccentric crank portion.

6. An apparatus as claimed in any one of Claims 1-5, in combination with a machine for the formation of helically wound metal tubing and comprising means for advancing a metal strip through a helical forming head through which said cantilever boom extends.

7. An apparatus according to Claim 7 when appended to Claim 6, wherein the machine for the formation of helically wound metal tubing is arranged to advance said metal strip at a predetermined peripheral speed around the said forming head, and the said eccentric shaft bearing the external cutting wheel is so arranged to rotate that the orbital motion of the said external cutting wheel is effected in the same direction and at a higher peripheral speed than that of the said metal strip.

36402/93

FIG. 1

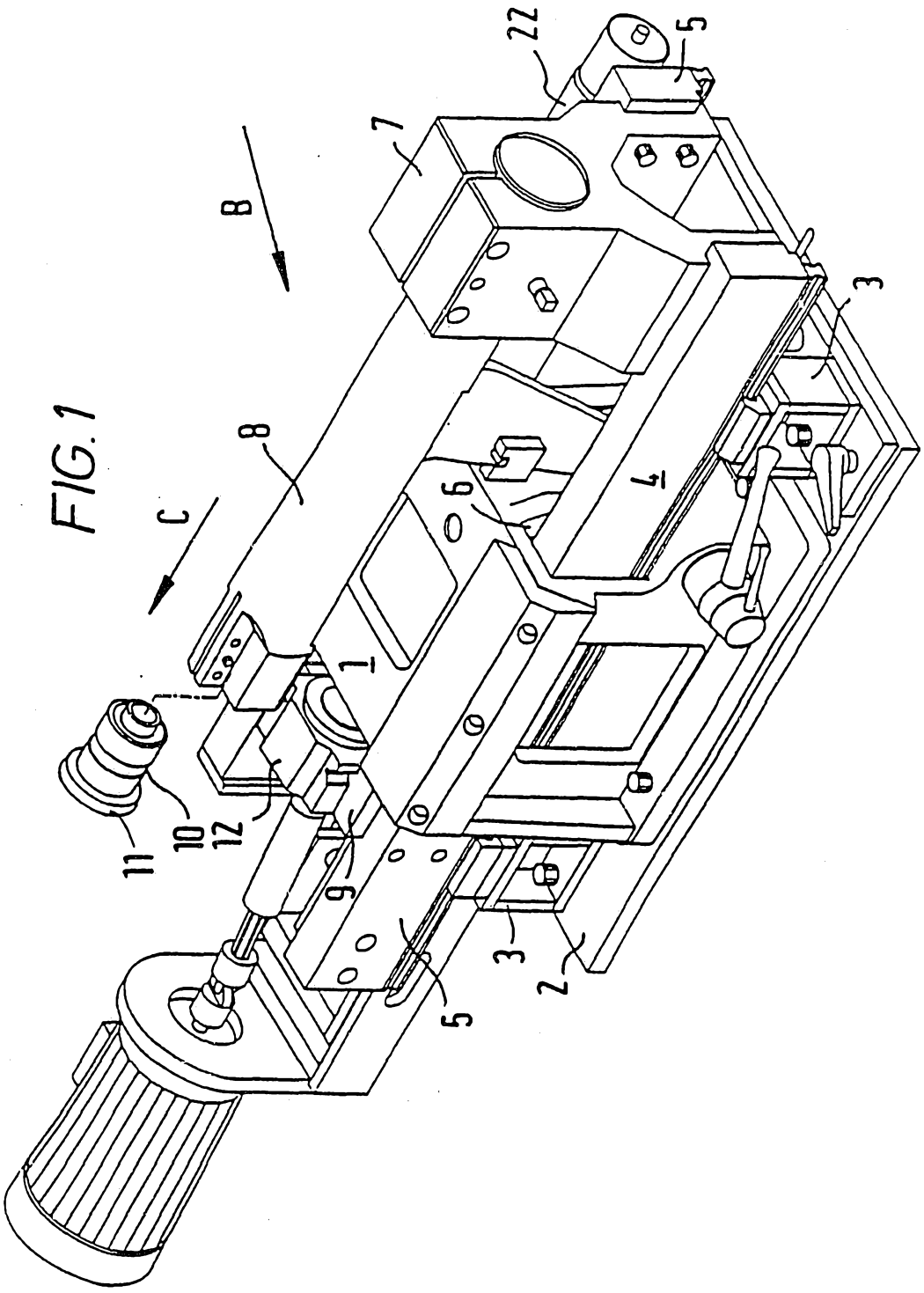

FIG. 2

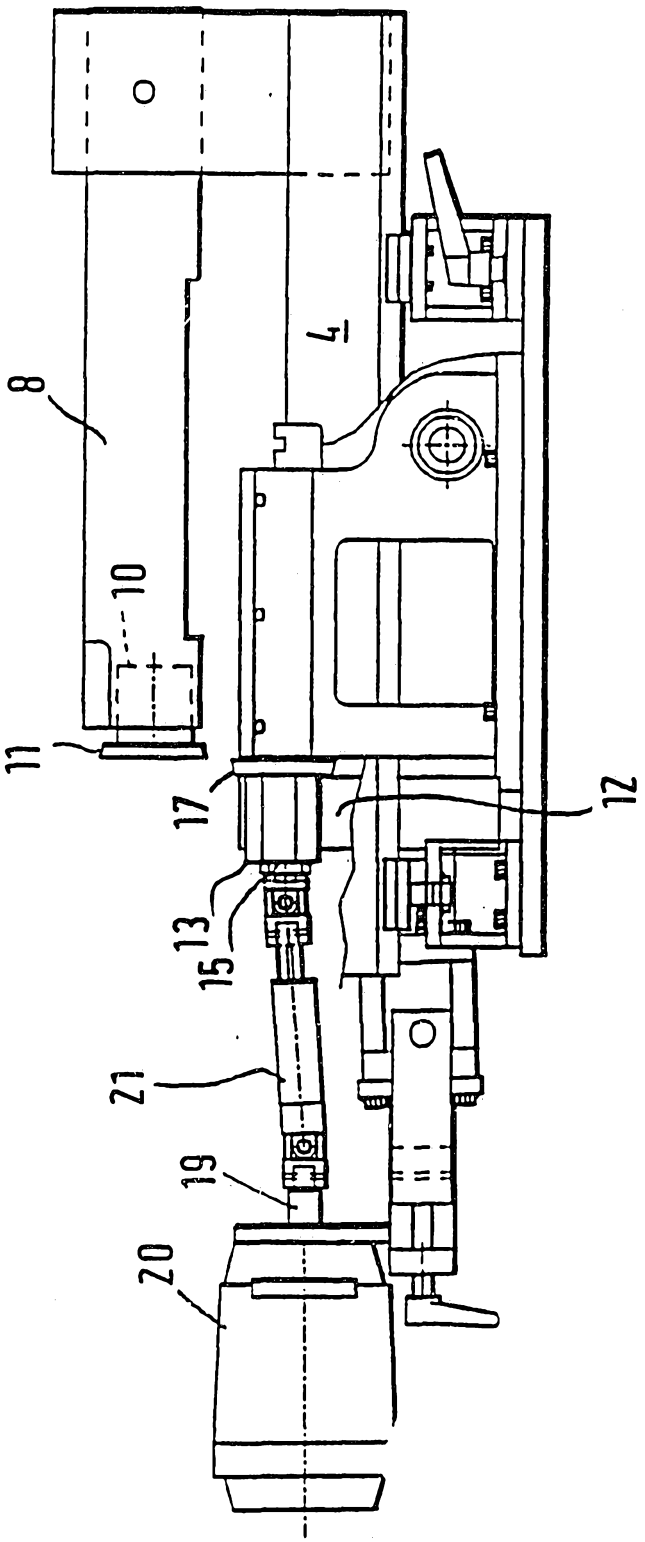

FIG. 3

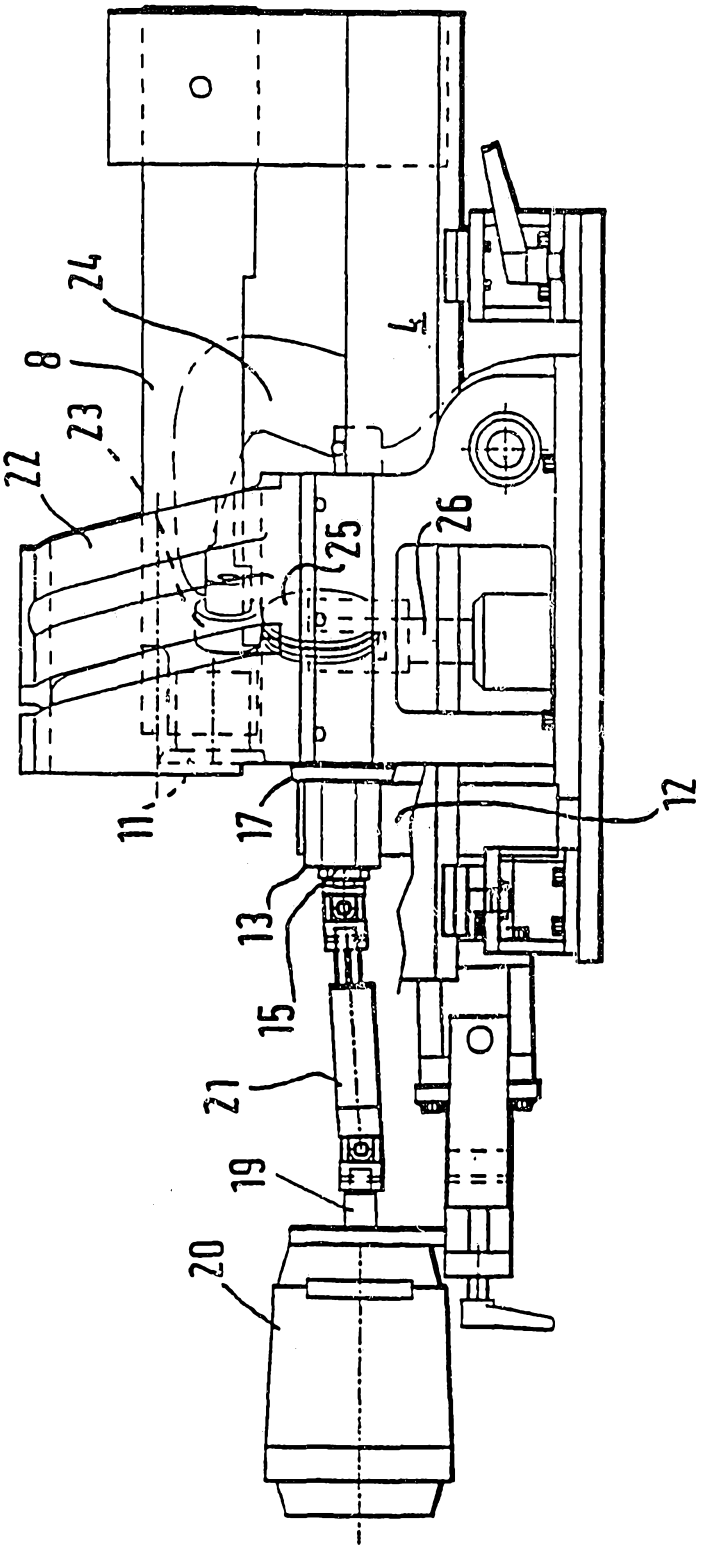

FIG. 4

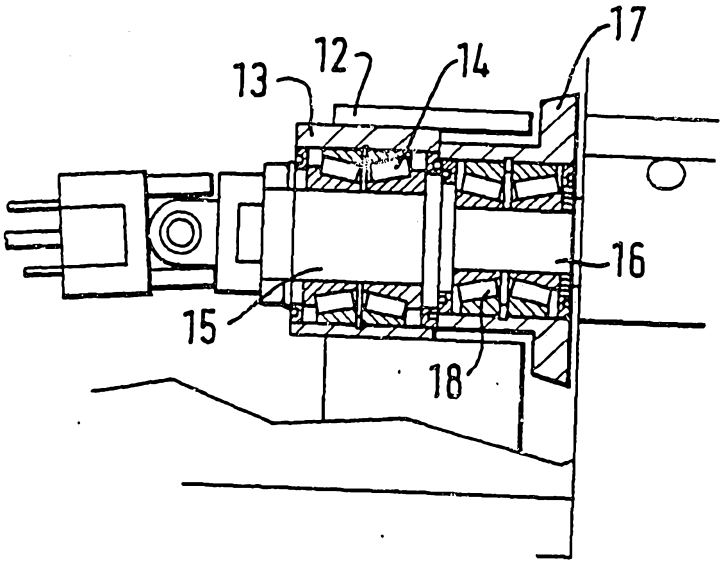

FIG. 5

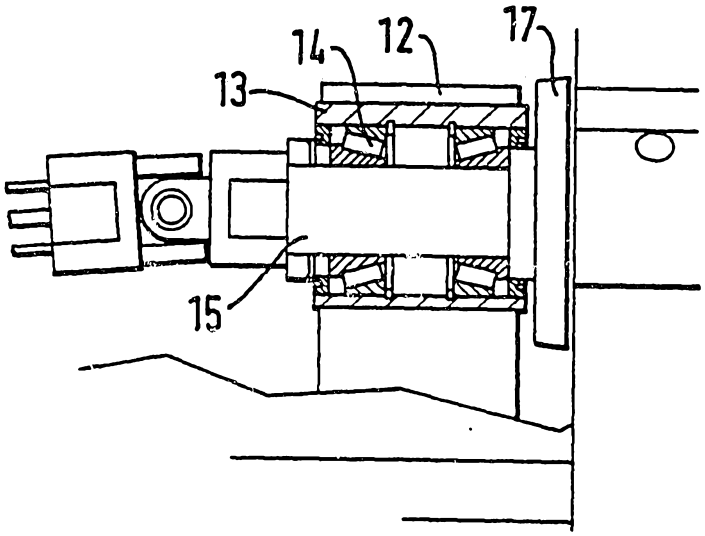

INTERNATIONAL SEARCH REPORT

International Application No PCT/GB 93/00438

I. CLASSIFICATION OF SUBJECT MATTER (if several classification symbols apply, indicate all)[6]

According to International Patent Classification (IPC) or to both National Classification and IPC

Int.Cl. 5 B21C37/12; B23D21/14; B26D3/16

II. FIELDS SEARCHED

Minimum Documentation Searched[7]

Classification System	Classification Symbols
Int.Cl. 5	B21C ; B23D ; B26D

Documentation Searched other than Minimum Documentation to the Extent that such Documents are Included in the Fields Searched[8]

III. DOCUMENTS CONSIDERED TO BE RELEVANT[9]

Category °	Citation of Document, [11] with indication, where appropriate, of the relevant passages [12]	Relevant to Claim No.[13]
A	EP,A,0 206 201 (SPIRO AMERICA INC.) 30 December 1986 see page 10, line 14 - page 14, line 5; figures 8,9	1,2,6
A	EP,A,0 403 425 (EMIL SUTER MASCHINENFABRIK AG) 19 December 1990 see column 4, line 38 - line 51; figures	1
A	US,A,4 823 579 (CASTRICUM) 25 April 1989 see abstract; figure 3	1-4,6,7
A	US,A,4 706 481 (CASTRICUM) 17 November 1987 cited in the application	1,2

° Special categories of cited documents :[10]

"A" document defining the general state of the art which is not considered to be of particular relevance

"E" earlier document but published on or after the international filing date

"L" document which may throw doubts on priority claim(s) or which is cited to establish the publication date of another citation or other special reason (as specified)

"O" document referring to an oral disclosure, use, exhibition or other means

"P" document published prior to the international filing date but later than the priority date claimed

"T" later document published after the international filing date or priority date and not in conflict with the application but cited to understand the principle or theory underlying the invention

"X" document of particular relevance; the claimed invention cannot be considered novel or cannot be considered to involve an inventive step

"Y" document of particular relevance; the claimed invention cannot be considered to involve an inventive step when the document is combined with one or more other such documents, such combination being obvious to a person skilled in the art.

"&" document member of the same patent family

IV. CERTIFICATION

2

Date of the Actual Completion of the International Search	Date of Mailing of this International Search Report
07 JUNE 1993	14. 06. 93
International Searching Authority	**Signature of Authorized Officer**
EUROPEAN PATENT OFFICE	BARROW J.

ANNEX TO THE INTERNATIONAL SEARCH REPORT ON INTERNATIONAL PATENT APPLICATION NO.

GB 9300438
SA 70720

This annex lists the patent family members relating to the patent documents cited in the above-mentioned international search report.
The members are as contained in the European Patent Office EDP file on
The European Patent Office is in no way liable for these particulars which are merely given for the purpose of information. 07/06/93

Patent document cited in search report	Publication date	Patent family member(s)	Publication date
EP-A-0206201	30-12-86	AU-B- 580173	05-01-89
		AU-A- 5890086	24-12-86
		CA-A- 1262616	07-11-89
		DE-A- 3683872	26-03-92
		JP-A- 62054619	10-03-87
		US-A- 4706481	17-11-87
EP-A-0403425	19-12-90	CH-A- 679023	13-12-91
		JP-A- 3035916	15-02-91
		US-A- 5074018	24-12-91
US-A-4823579	25-04-89	None	
US-A-4706481	17-11-87	AU-B- 580173	05-01-89
		AU-A- 5890086	24-12-86
		CA-A- 1262616	07-11-89
		DE-A- 3683872	26-03-92
		EP-A,B 0206201	30-12-86
		JP-A- 62054619	10-03-87