March 21, 1939. E. E. HINDMAN 2,151,274

ROTARY TOOL

Filed Jan. 15, 1936

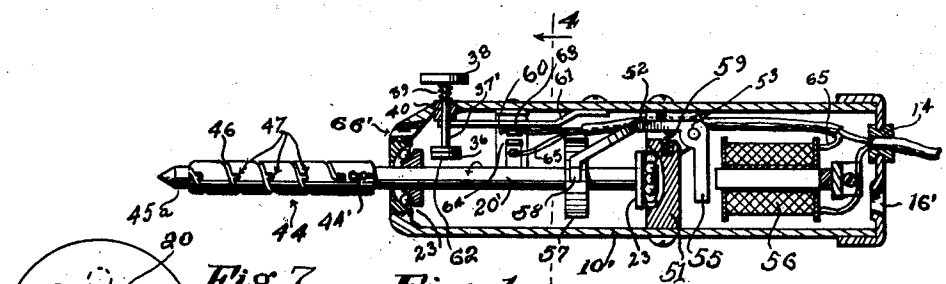

Fig. 1.

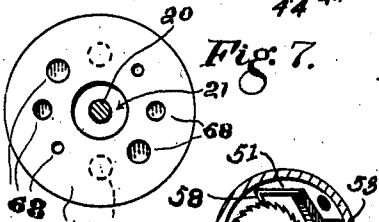

Fig. 7.

Fig. 2.

Fig. 3.

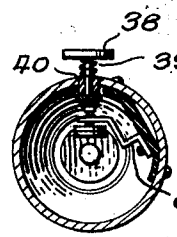

Fig. 4.

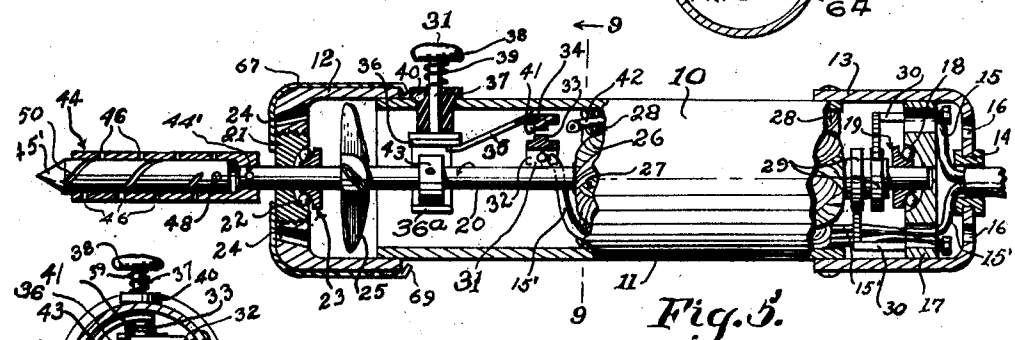

Fig. 5.

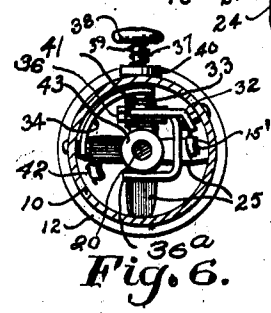

Fig. 6.

Inventor:

Earl Edward Hindman,

By Horace S. Woodward,

Attorney

Patented Mar. 21, 1939 2,151,274

UNITED STATES PATENT OFFICE

2,151,274

ROTARY TOOL

Earl Edward Hindman, Washington, D. C.

Application January 15, 1936, Serial No. 59,286

5 Claims. (Cl. 172—36)

The invention has for an object to present an improvement in erasers, brushes, tools, and other appliances used in writing, in fine arts, and various professional work and industries, particularly implements of that type which are electrically operated, to the end that a specially compact pencil-like motor-operated unit may be manufactured and sold at a low cost and which will have novel features and improved utility.

A further object is to provide a novel combined switch control, manual speed control, and automatic brake.

Additional objects, advantages and features of invention reside in the construction, arrangement and the combination of parts involved in the embodiment of the invention, as will appear from the following description and accompanying drawing, wherein

Figure 1 is a longitudinal sectional view of one embodiment of the invention;

Figure 2 is a top view thereof with parts broken away;

Figure 3 is a cross section on the line 3—3 of Figure 2.

Figure 4 is a section on the line 4—4 of Figure 1.

Figure 5 is a longitudinal sectional view of a preferred embodiment of the invention.

Figure 6 is a cross section thereof on the line 9—9.

Figure 7 is a left end view of the case.

There is illustrated in Figs. 5 and 6 an electric eraser comprising a case 10, formed of a central cylinder 11 on which front and back case cap sections 12 and 13 are fitted and secured in any approved manner. Centrally of the back section 12 a bushed opening 14 is formed through which wires 15—15' are led to a motor and switch to be described, and there are also formed air inlet holes 16. A cross head 17 is fixed in the case section 13 constructed to permit passage of air thereby, and formed on the front side with a ball race in which ball bearings 18 are held by a cone 19 fixed on the main shaft 20.

The forward end of the shaft is projected freely through the case head 11, in which there is screwed for adjustability a race 21, in which ball bearings 22 are provided supporting a cone 23 fixed on the shaft. Around the race 21 a series of tapered air jet openings 24 are formed in the head 11 having their axes inclined toward a point on the axis of the shaft a distance outwardly of the case, for purposes to be described. Within the head 12 a fan 25 is mounted on the shaft 20 adapted to propel air through the aperture 24.

A motor 26 is conventionally shown, which may be of any suitable type, including the armature 27 mounted on the shaft 20, and field windings 28 mounted on the cylinder 11. Commutator rings 29 are shown although other commutator forms may be used as required. Brushes 30 are mounted on the cross head 17, and suitable terminals provided for each, to one of which the wire 15 is led, the wire 15' being extended through the motor directly to a switch 31 mounted on the case section 11 forwardly beyond the motor. The switch comprises a plate 32 fixed on the case and projected transversely of the case near the shaft 20, having an insulated contact 33 thereon to which the wire 15' is connected. Mounted in the same transverse plane of the case at the opposite side, there is an insulated spring switch arm 34 curved concentrically with the case to lie parallel to the case wall, and extended over the contact 33, between the latter and the wall of the case. The arm 34 has a lateral extension 35, which projects longitudinally of the case toward the forward end, its extremity offset toward the shaft 20 so as to lie under a brake shoe 36, carried on a plunger 37 mounted radially in the forward end of the case, and having a finger piece 38 at its outer end confining a helical spring 39 against a bushing 40, fixed in the case and serving as the mounting for the brake.

When the brake shoe is in retracted position, the extension 35 rests against the shoe, and the switch is open. A contact 41 is mounted on the arm 34 to engage the contact 33 when the switch arm is depressed, and from the contact 41 a lead 42 is extended to the field coils 28.

On the shaft 20 alined with the brake shoe 36, there is a brake wheel or collar 43 upon which the shoe may engage after the switch is closed, by continued movement of the plunger. The extension 35 of the switch arm stops short of the wheel, so as not to contact therewith or interfere with application of the brake. The extension is strong enough to cause the arm 34 to be bent downward to close the switch on initial depression of the plunger before the shoe 36 engages the wheel 43, and after closure of the switch if the plunger is pressed farther, further movement of the brake shoe is permitted by flexure of the extension 35 or by torsion of the arm 34. The wires 15—15' may be provided with any usual electrical fitting at their outer ends, such as a "plug" of approved form whereby the ap-

pliance may be connected to standard outlets in offices, studios, shops, and elsewhere.

On the extreme forward end of the shaft **20**, without the case, a tool is provided, shown in the present instance as an eraser device consisting of a metal holder **44** of cylindrical form fixed on the shaft by means of a pin **44'**, being open at its outer end, and having inserted slidably and removably therein a solid cylinder eraser proper **45** which may be made of any materials usual in erasers, suited to the character of work upon which the device is to be used. In this instance, the eraser is also adjustable in the holder to compensate for wear. For this purpose the holder **44** is formed with a spiral slot **46** of suitable pitch, and in the side of this slot next the base of the holder there are formed extensions **47** or notches **47** extended longitudinally of the axis of the holder. The slot is open at its outer end on the extremity of the holder, and the notches may be provided at close intervals along the slot if desired. In the base of the eraser **45** there is fixed a lateral pin **48** movable freely along the slot and adapted to be adjusted in any of the notches **47**. The eraser **45** is also shown in Figure 5 as having a spiral groove **50** therein on its periphery and preferably extending from near the base of the eraser in the direction of rotation of the holder and opening on the outer end of the eraser. The groove may be longitudinal and be comparatively shallow, so as to not weaken the eraser excessively or cause liability of its breakage or excessive flexibility.

The direction of rotation of the holder is preferably opposite to the outward direction of the spiral slot in the holder **44**, whereby the tendency of the eraser to become too deeply set in the holder if loosened is minimized.

In the use of the form of the device described, the holder **44** having an eraser adjusted therein and the lead wires being connected to a suitable electrical source, the appliance is grasped in the hand after the manner of a pencil, and the point of the eraser applied to the matter to be erased while the forefinger or thumb is pressed upon the finger-piece. In case a slight abrasive action is desired, the finger-piece may be pressed down hard enough to apply the brake as required, and thus slow the rotation of the motor and avoid excessive wear of the surface of the work. The fan **25** will propel jets of air upon the surface of the work, and remove the particles of abraded material and eraser. Also at the same time the groove in the eraser will gather particles that tend to form under the eraser and throw them away from the point of application of the eraser, drawing them backwardly from the point of the eraser so that the point of application on the work does not become obscured, and the air jets remove these particles to a distance so that the erased area is cleared and the condition of the work is apparent at all times.

When the eraser becomes worn down too close to the holder, the motor is stopped and the outer end of the eraser grasped in the fingers of one hand and drawn outward with a twisting motion in the direction of the turn of the slot **46**. When projected sufficiently from the holder the eraser is then thrust longitudinally inward without applying any twisting force manually. This causes the pin **48** to bear against and slide upon the side of the slot having the notches **47** in it, rotating the eraser slightly relatively to the holder, and when the first notch **47** is encountered, the pin **48** will enter the same and stop further entry or relative rotation of the eraser in the holder. When the eraser is applied to the work while being rotated, the pressure of the work thrusts the pin **48** into the notch securely, and assures maintenance of the eraser in the adjusted position.

By having the motor turn in a direction opposite the outward direction of the spiral slot, if the device should be vibrated or jarred during use, or the pin **48** dislodged from one of the notches **47** momentarily, the eraser would tend to retain its position by the pressure of the inclined side of the slot against the pin **48**, whereas, if the device rotated in the opposite direction, the eraser might be drawn further into the holder, and possibly the holder allowed to engage the surface of the work. Also, in case of such engagement rotation counter to the direction of the slot would minimize liability of gouging the work by the advancing angularity at the outer side of the slot.

The eraser may be formed with a longitudinal groove **49**, as in the eraser **45'** of Figure 5 or a number of such grooves provided, or the eraser may be made without any groove, as at **45a** in Figure 1.

In Figures 1 to 4 a varied construction of the motor is illustrated, which may be employed if desired. In this instance, the shaft **20'** is mounted at its forward end substantially as in Figure 5, but the bearing for its rear end is located midway of the case **10'** which is conventionally shown in one piece, instead of at the rearmost part. This bearing is in a block **51**, and is similar to that in the cross head **17**. The block **51** is slotted at one side to receive for oscillation therein one arm **52** of a bell crank lever **53**, pivoted between two ears **54** formed on the outer side of the block **51**. The other arm extends inward transversely of the case and carries an armature **55** in operative relation to an electro-magnet **56** mounted in the outer part of the case.

The arm **52** of the lever is branched and its furcations inclined inwardly so as to terminate on a diametrical line of the shaft **20'** a ratchet wheel **57** being mounted on the shaft between the extremities of the furcations, and spring pawls **58** being mounted in the ends of the furcations inclined in opposite directions, so that the wheel will be propelled by each movement of the bell crank in each direction. The bell crank is held yieldingly at one limit of its movement by means of a spring **59**. A switch **60** is provided which may be the same as that first described, although the switch arm is shown as a simple leaf spring **61** extending longitudinally of the case, one end being fixed to the case and the other attached to the plunger **37'**, the latter being similar to the one **37** and having similar use in operating the switch and a brake **62**, which engages the shaft **20'** after substantial depression of the spring. The switch is located intermediately of the spring, which carries a contact **63** connected to one of the lead-in wires, and engages a stationary contact **64** from which a wire **65** leads to the magnet, the other lead-in wire being connected directly to the magnet. The use of this device is similar to that first described, except that no fan is shown and no air jet used. The eraser **45a** is a plain cylinder, but may be one of those first described with a self-starting action.

In either form of the device, by extending the eraser a substantial distance, and laying it sideways against the work while rotating, the device may be drawn along a line and a rapid erasure effected with accuracy. In case a single letter is

to be erased in typewriting, the eraser is positioned with its axis crossing the line, and the point only laid over the letter to be erased. The same may be done on drawings, and like principles of application followed in correcting drawings, generally.

Various eraser forms, tool heads and implements may be used interchangeably on the appliance, either using the holder **44** or other mounting means.

The case **10'** may also have an air aperture or more therethrough as at **66**, and any suitable source of compressed air may be connected to the inlet opening **16'** to supply air to the eraser for clearing the detritus.

In some aspects of the invention as hereinafter claimed, other motor devices may be utilized than those described, electric or otherwise.

Means may be provided in the device to cut off or diminish the amount of air discharged through the openings of the cases, and in Figures 5 and 6, this is shown as a cap **67** revolubly fitted over the cap **12** and having two imperforate areas adapted to lie over the openings **24** at one position, and graduated pairs of apertures **68** adapted to be brought successively into alinement with the apertures **24** by rotation of the cap **67** on the case. The inner edge of the cap **67** has inturned retaining tongues **69** engaging the inner edge of the cap **12**.

As seen in Figures 5 and 6, the brake shoe **36** is provided with an extension **36***a* extending downwardly and inwardly beneath the wheel **43**, and so positioned that on release of the plunger rising of the latter will lift the lower part of the shoe against the under side of the wheel, acting as a stop motion for the shaft as well as a stop for the plunger.

I claim:

1. In a hand tool which comprises a hand case, an axial revoluble tool-carrying shaft mounted therein, a motor operatively connected with the shaft, means to control the motor: a combined control operating means and brake including a finger-operated plunger, brake means on the plunger in operative relation to the shaft, a yielding member operatively connected with the plunger and the control, said brake being in lost motion relation to the shaft, whereby the brake will engage by continued movement of the plunger after beginning of operation of the motor, and means to retract the brake.

2. In a rotary hand tool which comprises a case, a motor mounted therein having a motor shaft revoluble in the case, a tool mounting thereon exteriorly of the case, electrical connections for the motor and a switch: a combined switch operating and brake device consisting of a movable switch arm, a spring pressed plunger in the case operatively connected with said arm to normally hold the switch open and having a finger piece exposed whereby to be engaged by the finger and depressed to operate the switch, the connection between the switch and plunger including a resilient element yieldable to further depressive movement of the plunger after closing of the switch and a brake device operatively associated with the shaft, including a brake shoe having spaced relation to the shaft when the switch is initially closed, and movable with the plunger thereafter to engage a friction part on the shaft.

3. The structure of claim 1 in which said brake includes an extension beyond the shaft and a second element thereon positioned to engage the shaft opposite the first named brake at initial position of the plunger, and the first named brake operates to control the speed of the shaft while in motion.

4. In a combined switch and speed control for motors of the character described, a motor having a shaft and a case, a friction member on the shaft, a switch comprising a case-carried contact, a movable case-carried switch arm having a contact positioned to engage the first contact and tending to move therefrom, said arm having a resilient yieldable part extended beyond the contact a material distance, a finger piece engaged therewith for movement of the arm to closed circuit position and beyond, and a brake member positively connected with the finger piece and initially spaced from the friction member more than the distance which it moves from initial position to closed switch position.

5. The structure of claim 4 in which said brake member has an extension beyond the friction member and positioned to engage the same opposite the brake member when the plunger is in initial position.

EARL EDWARD HINDMAN.