PCT WORLD INTELLECTUAL PROPERTY ORGANIZATION
International Bureau

INTERNATIONAL APPLICATION PUBLISHED UNDER THE PATENT COOPERATION TREATY (PCT)

(51) International Patent Classification 6 :
F16D 65/02, 69/00, G10K 11/16

A1

(11) International Publication Number: **WO 95/25912**

(43) International Publication Date: 28 September 1995 (28.09.95)

(21) International Application Number: PCT/US95/03267

(22) International Filing Date: 16 March 1995 (16.03.95)

(30) Priority Data:
08/217,300 23 March 1994 (23.03.94) US

(71) Applicant: ALLIEDSIGNAL INC. [US/US]; 101 Columbia Road, P.O. Box 2245, Morristown, NJ 07962-2245 (US).

(72) Inventor: ZENG, Lin, Jun; 3125 Fawnmeadow Court, Ann Arbor, MI 48105 (US).

(74) Agent: CRISS, Roger, H.; AlliedSignal Inc., Law Dept., Attn: C.A. McNally, 101 Columbia Road, P.O. Box 2245, Morristown, NJ 07962-2245 (US).

(81) Designated States: JP, European patent (AT, BE, CH, DE, DK, ES, FR, GB, GR, IE, IT, LU, MC, NL, PT, SE).

Published
With international search report.
Before the expiration of the time limit for amending the claims and to be republished in the event of the receipt of amendments.

(54) Title: NOISE ATTENUATED BRAKE FRICTION MEMBER

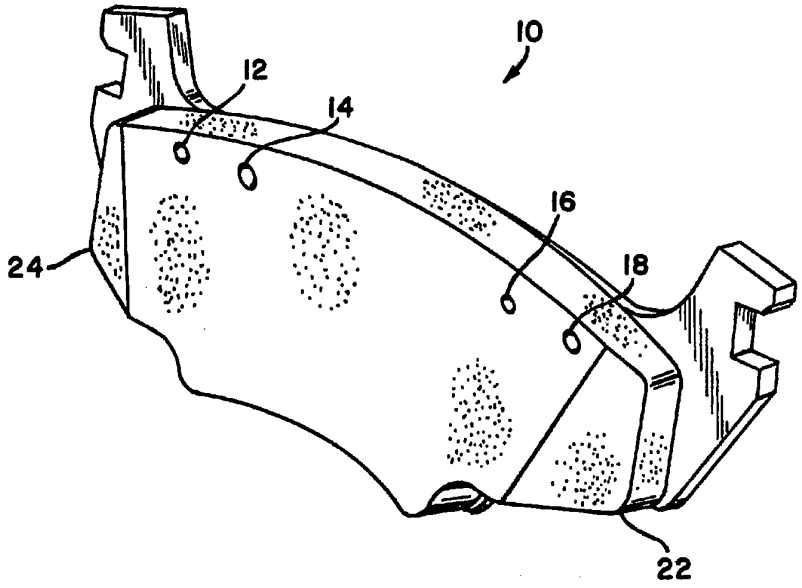

(57) Abstract

A method of attenuating audible sounds generated during a brake application through the engagement of a friction member (10, 30) with a rotating member. The brake is evaluated by modal and frequency response analysis to determine the natural frequencies generated during a brake application and identify the natural frequencies that create audible sounds. The locations on the friction member (10, 30) are identified which are most sensitive to generate audible sounds. Thereafter, portions (12-18, 32-54) of the friction material at the most sensitive locations are removed to change the natural frequency and attenuate the development of audible sounds.

FOR THE PURPOSES OF INFORMATION ONLY

Codes used to identify States party to the PCT on the front pages of pamphlets publishing international applications under the PCT.

AT	Austria	**GB**	United Kingdom	**MR**	Mauritania
AU	Australia	**GE**	Georgia	**MW**	Malawi
BB	Barbados	**GN**	Guinea	**NE**	Niger
BE	Belgium	**GR**	Greece	**NL**	Netherlands
BF	Burkina Faso	**HU**	Hungary	**NO**	Norway
BG	Bulgaria	**IE**	Ireland	**NZ**	New Zealand
BJ	Benin	**IT**	Italy	**PL**	Poland
BR	Brazil	**JP**	Japan	**PT**	Portugal
BY	Belarus	**KE**	Kenya	**RO**	Romania
CA	Canada	**KG**	Kyrgystan	**RU**	Russian Federation
CF	Central African Republic	**KP**	Democratic People's Republic of Korea	**SD**	Sudan
CG	Congo			**SE**	Sweden
CH	Switzerland	**KR**	Republic of Korea	**SI**	Slovenia
CI	Côte d'Ivoire	**KZ**	Kazakhstan	**SK**	Slovakia
CM	Cameroon	**LI**	Liechtenstein	**SN**	Senegal
CN	China	**LK**	Sri Lanka	**TD**	Chad
CS	Czechoslovakia	**LU**	Luxembourg	**TG**	Togo
CZ	Czech Republic	**LV**	Latvia	**TJ**	Tajikistan
DE	Germany	**MC**	Monaco	**TT**	Trinidad and Tobago
DK	Denmark	**MD**	Republic of Moldova	**UA**	Ukraine
ES	Spain	**MG**	Madagascar	**US**	United States of America
FI	Finland	**ML**	Mali	**UZ**	Uzbekistan
FR	France	**MN**	Mongolia	**VN**	Viet Nam
GA	Gabon				

NOISE ATTENUATED BRAKE FRICTION MEMBER

This invention relates to a method of reducing noise generated during a brake application by the removal of portions of a friction member at locations most sensitive to the natural frequencies that produce audible sounds.

BACKGROUND OF THE INVENTION

Attempts have been made to reduce or mask noise generated during a brake application through the application of sound coating on backing plates as disclosed in U.S. Patent 3,998,301, the location of a screen member between the friction member and backing plate as disclosed in U.S. Patent 4,154,322, the use of discrete friction members as disclosed in U.S. Patent 4,315,563, selecting the shape of a friction pad whose engagement surface is less than the nodal diameter of a frequency that would create undesirable noise as disclosed in U.S. Patent 4,705,146 and through modification of ingredients in the friction material. The methods and structure to reduce noise as disclosed in the prior art has not been widely accepted by the automobile industry primarily because of the added cost associate for such brake systems.

It is known that most structures vibrate and such vibration is often the result of dynamic forces applied to such structures. The vibration of the structures in frequency domain is a product of the structure response spectrum and the spectrum of the applied dynamic force. This is the basis of frequency response analysis. The structure response can be studied by modal analysis through which the modal parameters of the structure (natural frequencies, modal damping and mode shapes) can be identified, and ultimately a modal model of the structure can be constructed based on these modal parameters. From experimentation it has been determined that noise can essentially be generated with each brake system under specific force applications of the associated friction pads.

SUMMARY OF THE INVENTION

During evaluation of a brake system which included a caliper, associated brake linings and a rotor in a dynamometer high frequency noise was observed. Modal analysis and frequency response analysis was performed on the brake system to determine the natural frequencies generated during a brake application. Sensitivity analysis was further performed to identify specific locations on the brake lining which are most sensitive to excite the brake noise frequencies. From these analyses it was determined that a change in the brake lining at the

points most sensitive to vibration should also change or attenuate the development of audible brake noise. A plurality of holes where drilled into the brake lining at the most sensitive points and the brake system again evaluated with respect to noise. The sound pressure level of the brake system with such modification of the brake lining was reduced on an average of 40 percent which is an acceptable level for most applications.

It is an object of this invention to provide a method of attenuating the development of audible frequencies generated during a brake application through a modification of a brake lining.

It is a further object of this invention to provide a method of selecting a location on a brake lining most sensitive to the development of audible frequencies and modifying the brake lining to reduce the vibration frequencies at that point.

These objects should be apparent from reading this specification while viewing the drawings.

BRIEF DESCRIPTION OF THE DRAWINGS

Figure 1 is a schematic illustration of a friction pad for use in a disc brake which has been modified according to the present invention to reduce the generation of audible frequencies during a brake application;

Figure 2 is a table comparing the disc brake pad with and without the modification proposed by this invention;

Figure 3 is a schematic illustration of a friction pad for use in a drum brake which has been modified according to the present invention to reduce the generation of audible frequencies during a brake application; and

Figure 4 is the mode shape of a friction pads in a drum brake at a frequency which creates audible sounds.

DETAILED DESCRIPTION OF THE INVENTION

During dynamometer evaluation, the brake system produced an average sound pressure level of 72 dB at around 10100 Hz. In order to evaluate audible frequencies created during a brake application, modal analysis was performed on brake pads to build the modal model of the pads, then frequency response analysis was performed to the brake system by using the pad modal model as input excitation to determine the noise frequencies generated during a brake application. In modal analysis a dual channel Fast Fourier Transform analyzer was used to measure the ratio of the response to a measured input force. During

such analysis, the brake pad in the system was excited by either striking with an instrumented hammer or vibrating it with an electromagnetic shaker having a random or swept sine input. An accelerometer was mounted at various positions on the pad while it was excited in a uniform manner at a single point. The transfer of motion between the input to the output was recorded for a series of tests. This transfer function is a complex function having both a real and imaginary component. Commercialized modal analysis software package entitled "CAEDS" purchased from IBM was used to extract the modal parameters of the pad from these transfer functions to establish the pad modal model.

In frequency response analysis, structure vibration was evaluated on a finite element model of the brake system subjected to the excitation of the pad modal model. Maxim response was shown around the noise frequency (10100 Hz). The locations most sensitive to the generation of such frequency were identified as being adjacent the peripheral edge of the friction pad and not along the leading or trailing edge.

Figure 1 illustrates a friction pad 10 which has been modified by drilling holes 12, 14, 16, and 18 adjacent peripheral edge 20. The size and number of holes that are drilled through the friction pad 10 is a function of the frequency that is identified as creating the audible sound. In the instant test, only holes 14 and 16 were actually drilled and when the resulting friction pad 10 was tested, the average sound was reduced to 55 dB.

In order to confirm that modification of a friction pad by selectively removing a portion of the friction pad most sensitive to the generation of audible frequencies during a brake application, when modal analysis and frequency response analysis was performed on a friction member for a drum brake a mode shape as shown in Figure 4 was produced. As shown in Figure 4, the length of the force vectors $F, F', \ldots, F^N$ indicate the most likely location on the friction pad where audible frequencies would occur. The friction pad 30 shown in Figure 3 have been modified by cutting slots 32, 34, 36, 38, 40, 42, 44, 46, 48, 50, 52, and 54 in the peripheral edge at locations where the force vector indicated that audible frequencies were most likely to occur. It should be noted that the location of the slots are not in any set pattern on the friction pad 30 but it has been observed that the force vectors are more prominent at the leading edge 56 than at the trailing edge 58. Additional research has not yet been conducted to determine the optimize size of

the slots but it is understood that sufficient width and length must be provided to reduce the stress that would produced in the material at that location through the audible frequency.

To obtain actual test data, a vehicle under Los Angeles City Traffic (LACT) test was evaluated with respect to noise generated during a stop from 35 miles per hour at a constant 7 ft/s deceleration with only the rear brakes being actuated. Noise is rated from #1 through # 10 with #1 being unacceptable to #10 which is acceptable to most individuals. During this initial test, the brake system was rated #5-6 for cyclic squeal. To substantiate the position that modification of the friction pad through removal of a portion thereof would attenuate the development of audible noise, the friction pads for the rear brakes were removed and chamfers were ground into the inner and outer peripheral edges and leading and trailing edges. These modified friction pads were then replaced on the vehicle and the LACT testing resumed. During the remainder of the vehicle testing, the brake was rated at #10 which is acceptable for most application.

CLAIMS

I claim:

1. In a brake having a friction member which engages a rotating member to effect a brake application, said friction member and rotating member generating a plurality of frequencies of audible sounds, the improvement in a method of attenuating the audible sounds comprising the steps of:

performing modal and frequency response analysis of said brake to determine the natural frequencies generated during a brake application;

identifying the natural frequencies that create audible sounds; and

modifying said friction member by removing selected portions from said friction member at locations most sensitive to generate said audible sounds.

2. The method as recited in claim 1 wherein said modifying step includes:

drilling holes in said friction member at said locations.

3. The method as recite in claim 2 wherein said modifying step further includes:

selecting the size of said holes as a function of the audible sound frequencies.

4. The method as recited in claim 1 wherein said modifying step includes:

cutting slots along a peripheral edge of said friction member at selected audible sensitive locations.

5. The method as recited in claim 4 wherein said modifying step includes:

selecting the size of said slots as a function of said audible sound frequency.

6. The method as recited in claim 5 wherein said step of modifying steps includes:

locating said slots adjacent a leading edge of said friction member.

7. The method as recited in claim 3 wherein said step of drilling holes includes:

defining said locations to 6 KHz vibration frequencies as identified by said modal analysis, frequency response analysis and sensitivity analysis.

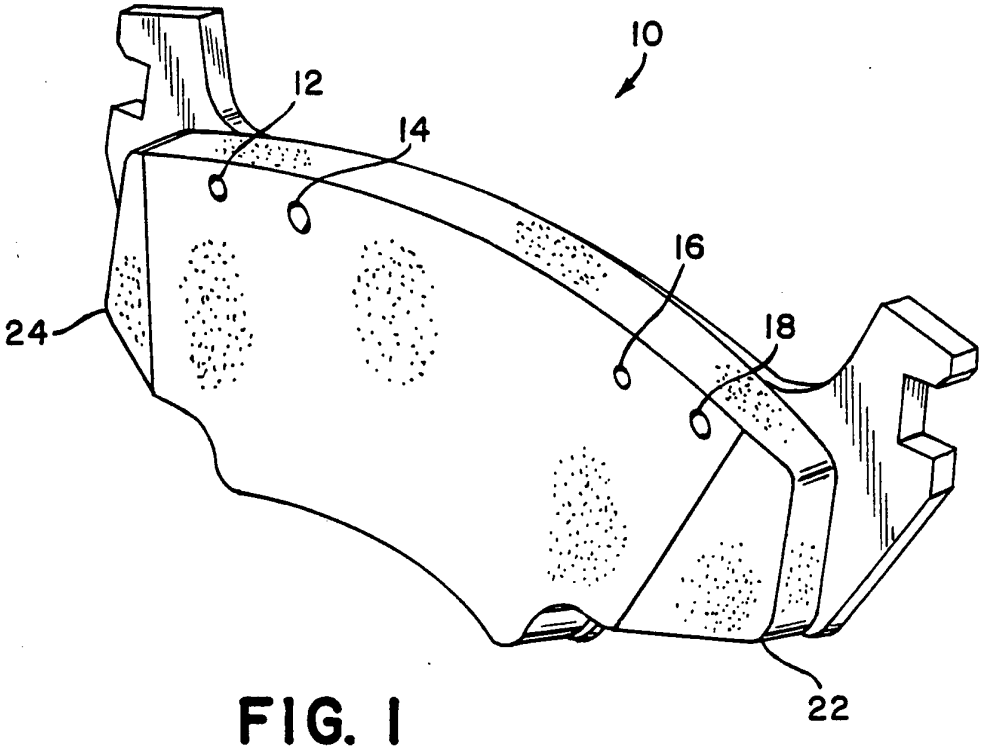

FIG. 1

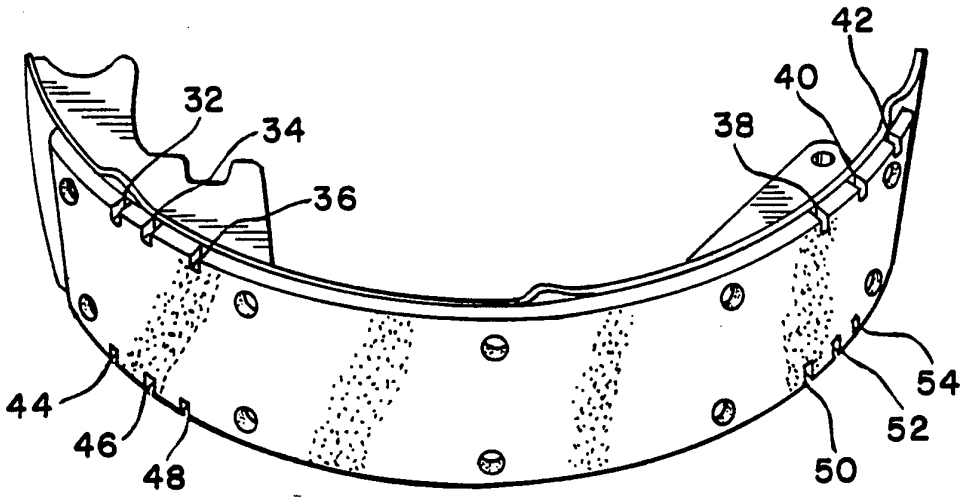

FIG. 3

before modification		after modification	
Freq. (Hz)	SPL (dB)	Freq. (Hz)	SPL (dB)
10272	67.6	10304	44.0
10080	62.9	10336	48.7
10048	66.4	10304	47.4
10048	65.3	10368	47.7
10048	52.8	10368	47.1
10048	53.5	10368	51.8
10272	63.4	10368	54.4
10304	75.5	10368	55.6
10272	74.3	10368	54.7
10272	75.6	10336	55.8
10304	75.5	10304	62.9
10048	75.6	10304	56.3
average	72.0	average	55.3

FIG. 2

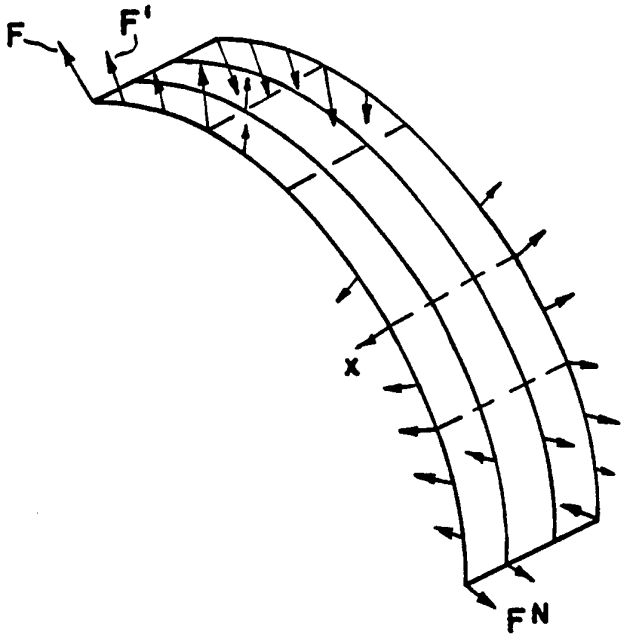

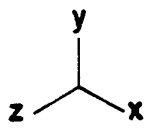

FIG. 4

INTERNATIONAL SEARCH REPORT

Internati ' Application No
PCT/US 95/03267

A. CLASSIFICATION OF SUBJECT MATTER
IPC 6 F16D65/02 F16D69/00 G10K11/16

According to International Patent Classification (IPC) or to both national classification and IPC

B. FIELDS SEARCHED

Minimum documentation searched (classification system followed by classification symbols)
IPC 6 F16D G10K

Documentation searched other than minimum documentation to the extent that such documents are included in the fields searched

Electronic data base consulted during the international search (name of data base and, where practical, search terms used)

C. DOCUMENTS CONSIDERED TO BE RELEVANT

Category *	Citation of document, with indication, where appropriate, of the relevant passages	Relevant to claim No.
A	DE,A,26 44 718 (STAHL) 6 April 1978 see the whole document ---	1,2
A	FR,A,2 545 896 (VALEO) 16 November 1984 see page 1, line 1 - page 2, line 12; figures ---	1,4,6
A	ELEKTRONIK, 27 December 1985, MüNCHEN, DE pages 82 - 84 ---	1,2
A	GB,A,2 206 935 (FERODO) 18 January 1989 see the whole document ---	1
A	EP,A,0 524 521 (AKEBONO BRAKE) 27 January 1993 see the whole document ---	1

-/--

[X] Further documents are listed in the continuation of box C.

[X] Patent family members are listed in annex.

* Special categories of cited documents :

"A" document defining the general state of the art which is not considered to be of particular relevance

"E" earlier document but published on or after the international filing date

"L" document which may throw doubts on priority claim(s) or which is cited to establish the publication date of another citation or other special reason (as specified)

"O" document referring to an oral disclosure, use, exhibition or other means

"P" document published prior to the international filing date but later than the priority date claimed

"T" later document published after the international filing date or priority date and not in conflict with the application but cited to understand the principle or theory underlying the invention

"X" document of particular relevance; the claimed invention cannot be considered novel or cannot be considered to involve an inventive step when the document is taken alone

"Y" document of particular relevance; the claimed invention cannot be considered to involve an inventive step when the document is combined with one or more other such documents, such combination being obvious to a person skilled in the art.

"&" document member of the same patent family

1

Date of the actual completion of the international search	Date of mailing of the international search report
21 July 1995	27.07.95.

Name and mailing address of the ISA	Authorized officer
European Patent Office, P.B. 5818 Patentlaan 2 NL - 2280 HV Rijswijk Tel. (+31-70) 340-2040, Tx. 31 651 epo nl, Fax (+31-70) 340-3016	Becker, R

Form PCT/ISA/210 (second sheet) (July 1992)

INTERNATIONAL SEARCH REPORT

Internat' Application No
PCT/US 95/03267

C.(Continuation) DOCUMENTS CONSIDERED TO BE RELEVANT

Category *	Citation of document, with indication, where appropriate, of the relevant passages	Relevant to claim No.
A	GB,A,2 232 449 (BBA GROUP) 12 December 1990 see page 1, line 19 - page 5, line 8; figures -----	1

Form PCT/ISA/210 (continuation of second sheet) (July 1992)

INTERNATIONAL SEARCH REPORT

Information on patent family members

Internat Application No
PCT/US 95/03267

Patent document cited in search report	Publication date	Patent family member(s)		Publication date
DE-A-2644718	06-04-78	AT-B-	370219	10-03-83
FR-A-2545896	16-11-84	NONE		
GB-A-2206935	18-01-89	NONE		
EP-A-0524521	27-01-93	JP-A-	6185552	05-07-94
		US-A-	5417313	23-05-95
GB-A-2232449	12-12-90	NONE		