C. E. DURYEA.

MECHANISM FOR TRANSMITTING POWER AND MOTION.

APPLICATION FILED MAY 9, 1912.

1,072,439. Patented Sept. 9, 1913.

Fig. 1.

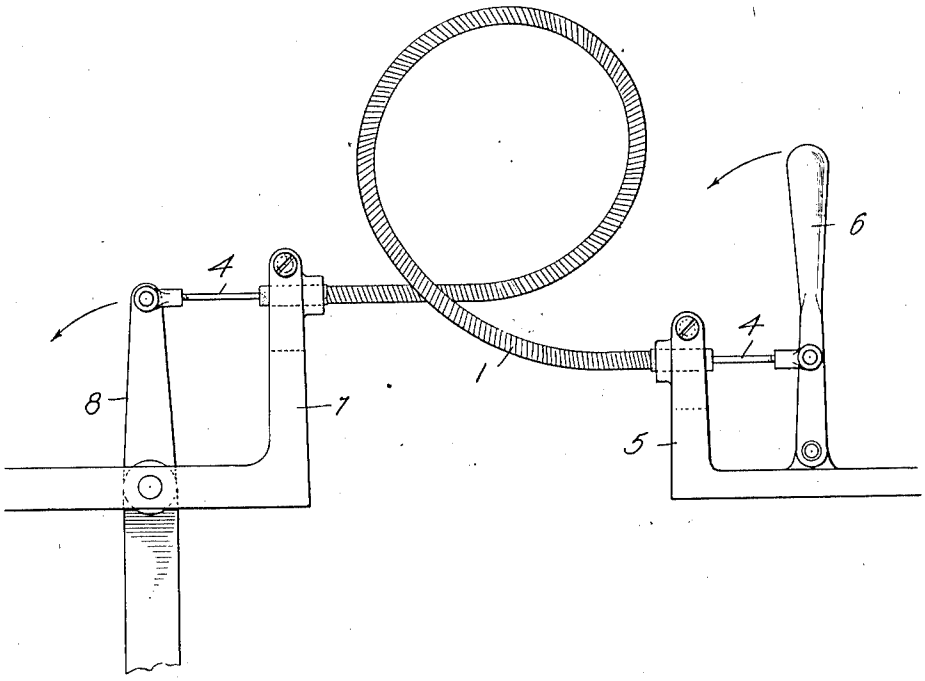

Fig. 2.

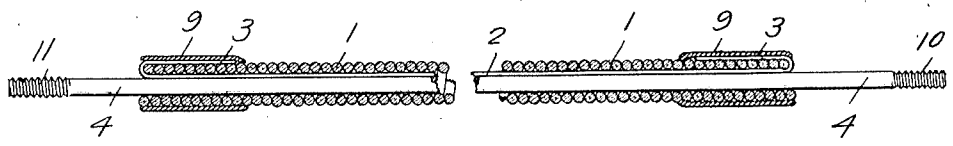

Fig. 3.

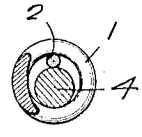

Inventor

CHARLES E. DURYEA,

By E. R. Bond

Attorney

Witnesses

L. H. Schmidt.

R. R. Bond.

UNITED STATES PATENT OFFICE.

CHARLES E. DURYEA, OF SAGINAW, MICHIGAN.

MECHANISM FOR TRANSMITTING POWER AND MOTION.

1,072,439. Specification of Letters Patent. Patented Sept. 9, 1913.

Application filed May 9, 1912. Serial No. 696,254.

To all whom it may concern:

Be it known that I, CHARLES E. DURYEA, a citizen of the United States of America, and resident of Saginaw, in the county of Saginaw and State of Michigan, have invented certain new and useful Improvements in Mechanism for Transmitting Power and Motion, of which the following is a specification.

My invention relates to that class of devices intended to operate movable apparatus at some distance from the operating member and particularly in such cases as those wherein the operating and the operated positions are not in a positive relation to each other but vary in their distance so that usual operating members must be constructed with considerable complication to permit this varying distance.

My invention is designed more particularly as an improvement upon those devices consisting of a flexible incompressible member surrounding a flexible inextensible member quite commonly known as Bowden wire. My device, however, permits both pulling and pushing, whereas the common constructions permit only pulling on the inextensible member or in lieu thereof pushing on the incompressible member and in order to get motion in the opposite directions, either a second set must be used or springs at the opposite end to pull in the contrary direction must be employed. I overcome these objections by rendering the flexible outer member inextensible as well as incompressible and by using for the inner member a wire of high elasticity which, although sufficiently flexible for all common conditions, is sufficiently stiff to permit of both pulling and pushing to transmit the usual power required, such as to operate throttles of engines on automobiles, boats and aeroplanes or to operate brakes and do many such services.

Other objects and advantages of the invention will hereinafter appear and the novel features thereof will be particularly pointed out in the appended claims.

I accomplish the objects of my invention by the mechanism shown in the accompanying drawings, in which—

Figure 1 is an elevation showing one application of my improved push and pull wire. Fig. 2 is a sectional detail showing more specifically the construction of the novel member. Fig. 3 is a cross section through the member, on an enlarged scale.

Like numerals of reference indicate like parts throughout the different views.

Referring to the drawings, the incompressible member 1 is usually a coil of spring wire closely wound so that each coil rests against its next adjacent neighbor and thus it resists compression. While it is possible by the use of heavy wire wound under some torsion to make these coils press against each other with considerable force, there is always danger that they will be sprung apart and become longer than their original length with accompanying compressibility which is detrimental to the device. To prevent this stretching or lengthening, I pass through the coil 1 a single strand of wire 2 and fasten its ends to the ends of the coil 1, in any suitable manner, as shown at 3 in Fig. 2. It is now quite evident that the coil 1 cannot be extended unless the wire 2 is broken and it being of high grade spring wire will resist heavy pulls and yet be sufficiently flexible to permit usual movements like the motion of the bicycle handle bar or the action of the auto body on its springs. Since the coil 1 is now rendered inextensible by the wire 2 and is incompressible because its coils lie against each other, it is evident that the lineal distance between its ends measured along the axis of the coil 1 is constant even though the relation of the ends to each other in a straight line may be widely varied. It is also evident that if a wire 4 be passed through the coil 1, the amount of wire inside the coil will always be the same as the length of the coil, since both the coil 1 and the wire 4 are both incompressible and inextensible. It is, therefore, evident that if one end of the coil 1 is fastened to the bracket 5 carrying the operating handle 6 and the other end of 1 is fastened to the bracket 7 carrying the operated throttle lever 8 and the wire 4 is attached at its opposite ends to the levers 6 and 8 respectively, that the motion of the handle 6 in either direction, as indicated by the arrow will move the lever 8 in like direction, and to like amount, practically as though the handle of the lever 6 was attached to the lever 8 solidly. Further, that this perfect transferrence of movement in either direction takes place even though the bracket 5 may be widely moved or may be in motion with respect to the bracket 7.

It is evident that more than one wire 2 may be used inside the coil 1, or that more than one wire 4 may pass through the coil 1, the object of the multiple wires 2 being to secure additional strength and of the multiple wires 4 to operate additional devices from additional handles. The limit is, of course, the friction that may be induced by multiple wires rubbing on each other or the slight amount of lost motion which may arise from these wires not perfectly fitting the space in which they lie. It is usually common to fill the interstices of such a device with heavy oil or light grease to both protect from rust and moisture and to insure easy movement. The exact size of the apparatus and its amount of flexibility is a matter depending upon the amount of power to be transmitted, but for usual bicycle and auto engine throttles the wire 4 works well if about one-sixteenth inch diameter and the coil 1 if of three-sixteenth inch diameter. The thickness of the wire of which the coil 1 is formed is not very material so long as there is sufficient space inside the coil for the wire 4 and the wire 2 and in my device, which depends upon the wire 2 for the inextensibility of the coil 1, some weight and cost is saved by making the coil 1 of a wire of smaller diameter than can be used successfully with other methods.

The ends of the coil may be covered with rubber or other material 9 which also covers the attached ends of the wire 2, and the ends of the wire 4 may be attached to their respective members in any suitable way; for instance, the ends of the wire may be screw-threaded, as seen at 10 and 11, for connection with the handle 6 and lever 8, or these ends may be soldered or otherwise affixed in position.

From the foregoing, it will be seen that I have devised a very simple, yet efficient and durable member embodying the requisite amount of flexibility, yet so constructed as to be employed for both pushing and pulling, and while the structural embodiment of the invention as hereinbefore disclosed is what I at the present time consider preferable, it is evident that the same is subject to changes, variations and modifications in proportions, relative arrangement of parts, etc., without departing from the spirit of the invention or sacrificing any of its advantages. I, therefore, do not intend to restrict myself to the exact construction herein disclosed, but reserve the right to make such changes, variations and modifications as come properly within the scope of the protection prayed.

What is claimed as new is:—

1. A flexible power-transmitting ligament comprising a flexible non-compressible member, and a non-compressible non-extensible member movable therethrough, and inextensible means connecting the ends of said first-named member for holding the same against extension.

2. A power transmitting device comprising a non-compressible normally non-extensible hollow flexible member, inextensible means secured thereto for holding it against extension, and a non-compressible, non-extensible member slidably mounted within said hollow member.

3. A power transmitting device comprising a coiled member, means within the same joining its ends to prevent its extension, and a non-compressible, non-extensible member loosely received in said coil.

4. A power transmitting element comprising a flexible non-compressible member comprising a coil, an attaching member movable within the same, and means within and joining the ends of said coil for holding said coil against extension.

5. A power transmitting element comprising a flexible non-compressible member comprising a coil, an attaching member movable within the same, and means within and joining the ends of said coil for holding said coil against extension and compression.

6. A power transmitting element comprising a non-compressible, non-extensible element embodying a non-compressible non-extensible coil, inextensible means carried by and secured to the coil for holding the same against extension, and a non-compressible non-extensible member movable relatively to said coil.

7. A power transmitting element comprising a coiled member, a flexible non-extensible wire extending within the same and holding the coil against extension, and a non-compressible, non-extensible member loosely received within the coil.

Signed by me at Saginaw, Mich., this 6th day of May 1912.

CHARLES E. DURYEA.

Witnesses:
GEORGE GALLUP,
CARL E. ROGUER.