(12) INTERNATIONAL APPLICATION PUBLISHED UNDER THE PATENT COOPERATION TREATY (PCT)

(19) World Intellectual Property Organization
International Bureau

(43) International Publication Date
21 February 2019 (21.02.2019)

WIPO | PCT

(10) International Publication Number
WO 2019/035722 A1

(51) International Patent Classification:
F16L 3/22 (2006.01) *F16L 3/26* (2006.01)

(21) International Application Number:
PCT/NO2018/050209

(22) International Filing Date:
15 August 2018 (15.08.2018)

(25) Filing Language: English

(26) Publication Language: English

(30) Priority Data:
20171360 16 August 2017 (16.08.2017) NO

(71) Applicant: **ØGLÆND SYSTEM AS** [NO/NO]; Postboks 133, 4358 Kleppe (NO).

(72) Inventor: **GYA, Arne**; Kløverveien 18, 4340 Bryne (NO).

(74) Agent: **HÅMSØ PATENTBYRÅ AS**; P.O. Box 171, 4301 Sandnes (NO).

(81) Designated States *(unless otherwise indicated, for every kind of national protection available)*: AE, AG, AL, AM, AO, AT, AU, AZ, BA, BB, BG, BH, BN, BR, BW, BY, BZ, CA, CH, CL, CN, CO, CR, CU, CZ, DE, DJ, DK, DM, DO, DZ, EC, EE, EG, ES, FI, GB, GD, GE, GH, GM, GT, HN, HR, HU, ID, IL, IN, IR, IS, JO, JP, KE, KG, KH, KN, KP, KR, KW, KZ, LA, LC, LK, LR, LS, LU, LY, MA, MD, ME, MG, MK, MN, MW, MX, MY, MZ, NA, NG, NI, NO, NZ, OM, PA, PE, PG, PH, PL, PT, QA, RO, RS, RU, RW, SA, SC, SD, SE, SG, SK, SL, SM, ST, SV, SY, TH, TJ, TM, TN, TR, TT, TZ, UA, UG, US, UZ, VC, VN, ZA, ZM, ZW.

(84) Designated States *(unless otherwise indicated, for every kind of regional protection available)*: ARIPO (BW, GH, GM, KE, LR, LS, MW, MZ, NA, RW, SD, SL, ST, SZ, TZ, UG, ZM, ZW), Eurasian (AM, AZ, BY, KG, KZ, RU, TJ,

(54) Title: A SUPPORT BRACKET FOR ATTACHMENT TO A PRECAST HOLLOW CONCRETE ELEMENT

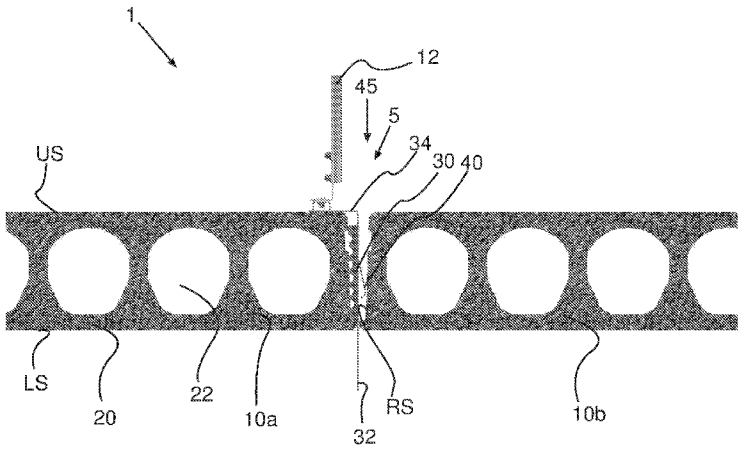

Fig. 1a

(57) Abstract: A support channel arrangement (1) for attachment of a support channel (14) to a precast hollow concrete element (10a, 10b). The support channel arrangement comprises at least one support bracket (5) comprising an elongated body (48), a first attachment arrangement (30) with a resilient member (40) for attaching the bracket to the concrete element, and a second attachment arrangement (32) for attaching a support channel to the bracket. The support channel arrangement further comprising a first precast hollow concrete element and a second precast hollow concrete element arranged as separate elements adapted to be brought to engagement so that an intersection (45) is formed between them. The first attachment arrangement is configured to be confined at said intersection with the resilient member acting on at least one of the first precast hollow concrete element and the second precast hollow concrete element.

WO 2019/035722 A1

[Continued on next page]

TM), European (AL, AT, BE, BG, CH, CY, CZ, DE, DK, EE, ES, FI, FR, GB, GR, HR, HU, IE, IS, IT, LT, LU, LV, MC, MK, MT, NL, NO, PL, PT, RO, RS, SE, SI, SK, SM, TR), OAPI (BF, BJ, CF, CG, CI, CM, GA, GN, GQ, GW, KM, ML, MR, NE, SN, TD, TG).

Published:

— *with international search report (Art. 21(3))*

A SUPPORT BRACKET FOR ATTACHMENT TO A PRECAST HOLLOW CONCRETE ELEMENT

Introduction

The present invention relates to a support bracket for attachment to a precast hollow concrete element. The bracket comprises an elongated body, a first attachment arrangement and second attachment arrangement. The first attachment arrangement is configured for attaching the bracket to the concrete element. The first attachment arrangement is located at a first portion of the body. The second attachment arrangement is configured for attaching a support channel to the bracket for support of multi discipline products, such as cable ladders, trays, pipes and ducts. The second attachment arrangement is located at a second portion of the body.

The present invention also relates to a support channel arrangement, a system comprising the support channel arrangement, a support channel installation and a method for attaching one or more support brackets to a precast hollow concrete element. The present invention also relates to use of a support bracket and support channel arrangement according to the invention.

Prior art

Precast hollow concrete elements are used as components in various buildings constructions. The use of precast hollow concrete elements has the advantage of enabling buildings to be established efficient and cost effective. Furthermore, the precast hollow concrete elements are manufactured under controlled conditions and are accordingly of reliable quality.

The precast hollow concrete elements comprise a hollow structure for optimal material usage and are furthermore reinforced and pre-stressed for improvement of their strength, such as by means of steel reinforcing bars (rebars).

The precast hollow concrete elements are used for constructing buildings, such as walls, floors and ceilings of rooms and corridors. The buildings are also to be provided with wiring and tubing that are attached to the roof by means of support brackets to which a support channel is attached. The wiring and tubing are for certain buildings extensive in size and length, such as in a hospital.

The attachment of the brackets is challenging in that the material at the hollow compartments is thin and does not provides sufficient strength for certain loads of equipment. Drilling is normally not

allowed in the precast hollow concrete elements and could involves may reduce the strength of the precast hollow concrete elements.

A further disadvantage with prior art support brackets is that the attachment of the bracket in precast hollow concrete elements is time consuming and involves manual work at elevated height at the lower side of the precast hollow concrete elements.

Summary of the invention

The invention has for its object to remedy or to reduce at least one of the drawbacks of the prior art, or at least provide a useful alternative to prior art. The object is achieved through features, which are specified in the description below and in the claims that follow.

The object of the invention is to provide an improved support bracket for attachment to a precast hollow concrete element. In particular, a first object of the invention is to provide an improved support bracket that enables attachment to a precast hollow concrete element without damaging or reducing the strength of the concrete element. A second object of the invention is to provide an improved support bracket that enables attachment to a precast hollow concrete element in a quick and reliable manner. A third object of the invention is to provide an improved support bracket that enables attachment to a precast hollow concrete element with improved occupational safety and health at the workplace. A fourth object of the invention is to provide an improved support bracket that enables attachment without drilling operation and the resulting dust and noise involved.

This object is provided by means of a support bracket according to the invention comprising
- an elongated body,
- a first attachment arrangement for attaching the bracket to the concrete element, which first attachment arrangement is located at a first portion of the body, and
- a second attachment arrangement for attaching a support channel to the bracket, which second attachment arrangement is located at a second portion of the body.

The support bracket is characterized in that the first attachment arrangement comprises a resilient member protruding away from an elongated axis of the body, wherein the first attachment arrangement is configured to be confined at an intersection between a first precast hollow concrete element and a second precast hollow concrete element with the resilient member acting on at least one of the first precast hollow concrete element and the second precast hollow concrete element.

The first precast hollow concrete element and the second precast hollow concrete element are elements that are adapted in cooperation to form a ceiling of a first level of a building and a floor of a second level of the building. The support bracket is adapted to be attached to the ceiling of the first level of the building. Normally, a plurality of support brackets would be attached to hold the support channel. The support channel is adapted to support multi discipline products, such as cable ladders, trays, pipes and ducts. The term support channel is to be understood as a framework

for holding above mentioned products.

The first attachment arrangement located on the first portion of the body is configured to form the attachment of the bracket. The first attachment arrangement is adapted to be confined at the intersection between the first precast hollow concrete element and the second precast hollow concrete element. By means of the resilient member, the bracket is firmly attached at the intersection between the first and the second precast hollow concrete element when concrete elements are brought to engagement. The resilient member also accommodates to the space of the intersection that is formed when the concrete elements are brought to engagement.

The term resilient member is to be understood as member adapted to be compressed from its resting position, in which an opposing force proportional to the compression is induced. The resilient member is for example a spring of various types and of materials providing such resilient properties, such as spring steel.

The second attachment arrangement is configured to attach a support channel to the bracket. The second attachment arrangement is located at a second portion of the body that protrudes away from a lower surface of the first and the second precast hollow concrete element.

The support bracket of the invention enables the bracket to be attached to precast hollow concrete elements without damaging or reducing the strength of the concrete elements. The bracket also enables a quick attachment simultaneous with assembling the two precast hollow concrete elements together into the ceiling. In that no manual work of drilling into the precast hollow concrete elements is necessary, the safety of the workers involved in the attachment of the bracket is improved.

It shall be understood that, correspondingly, further hollow concrete elements may be used for forming a further level above the second level to which one or more support brackets may be attached in the same manner. The term “lower surface” and “upper surface” of the precast hollow concrete elements will further be used in the description as they would generally be understood in the context of establishing a ceiling of a building by means of two precast hollow concrete elements.

According to an embodiment of the invention, the resilient member comprises a spring biased tongue adapted to engage with at least one of the first precast hollow concrete element and the second precast hollow concrete element when the bracket is arranged at said intersection.

The spring biased tongue extends from the body of the bracket at the second portion of the body and is adapted to contact one of the concrete elements at the intersection between the elements. Thereby, the bracket is firmly attached in the intersection between the two concrete elements.

According to an embodiment of the invention, the spring biased tongue is adapted to engage with a

rim part of at least one of the first precast hollow concrete element and the second precast hollow concrete element when the bracket is arranged at said intersection. The rim part constitutes the edge/border of the two concrete elements. In particular, the spring biased tongue is adapted to contact a rim surface of the at least one of the two concrete elements.

According to an embodiment of the invention, the spring biased tongue comprises a punched-out part of the first portion of the body. By means of forming the spring biased tongue by a punching operation, the bracket can be manufactured efficient and cost effective.

According to an embodiment of the invention, the first precast hollow concrete element and the second precast hollow concrete element are adapted to form a compartment at said intersection, wherein the first portion of the body of the bracket is configured to, when confined in said compartment, form a space in the compartment adapted to be filled with a flowable solidifier.

By means of configuring the bracket so it only requires part of the space of the compartment, the attachment of the bracket to the concrete elements can be further improved by filling the space with the flowable solidifier. When the flowable solidifier has solidified, the bracket is an integrate part of intersection. The flowable solidifier has also the function of attaching the two concrete elements together to a combined ceiling.

According to an embodiment of the invention, the flowable solidifier comprises mainly a concrete material. For example, the concrete material comprises a coarse aggregate bonded together with a fluid cement that hardens over time.

According to an embodiment of the invention, the first portion of the body is flat comprising two opposite sides, wherein the first portion of the body is configured to form said space on the opposite sides of the first portion of the body. Accordingly, the first portion of the body is configured so that a space is formed on both sides for the flowable solidifier to fill and the first portion of the body is adapted to be enclosed in the flowable solidifier. Thereby, a firm attachment of the bracket at the intersection is obtained.

According to an embodiment of the invention, the body at the first portion is configured in a U-form. For example, the two legs of the U-form are adapted to bear at one of the first precast hollow concrete element and the second precast hollow concrete element, and the part opposite to the two legs are adapted to bear at the other of the first precast hollow concrete element and the second precast hollow concrete element. Preferably, the part opposite to the two legs are provided with the resilient member contacting the other of the first precast hollow concrete element and the second precast hollow concrete element.

According to an embodiment of the invention, the body mainly comprises a sheet material. The sheet material is for example a metallic material, such as mainly comprising steel, stainless steel, aluminium, copper and alloys thereof.

According to an embodiment of the invention, the bracket further comprising a third attachment arrangement comprises means for releasable connecting the bracket for attaching the bracket to an assembly frame, which third attachment arrangement is located at a third portion of the body.

The bracket is adapted to be releasable attached to an assembly frame by means of the third attachment arrangement. The assembly frame is used for holding and orienting the bracket to a desired position and orientation at the intersection when bringing the first hollow concrete element and the second hollow concrete element together.

According to an embodiment of the invention, the means for releasable connecting the bracket comprises a magnetic member adapted to engage with a ferromagnetic part of the said assembly frame or a ferromagnetic part adapted to be to engage with a magnetic member of said assembly frame. According to an embodiment of the invention, the magnetic member comprises a permanent magnet.

The magnetic member is arranged at either the third attachment arrangement or at the assembly frame. By arranging the magnetic member at the third attachment arrangement, various materials of the bracket may be used including ferromagnetic materials and non-ferromagnetic materials. By arranging the magnetic member at the assembly frame, a simple and cost-effective bracket can be used for forming the attachment to the hollow concrete elements.

According to an embodiment of the invention, the third portion of the body comprises a central member extending parallel with a longitudinal axis of the support bracket and a flanged member extending away from the central member, wherein the flanged member is adapted to bear at an upper surface of the first precast hollow concrete element. Preferably, the flanged member is arranged extending perpendicular in respect to the central member. By means of the configuration of the central member and the flanged member, the bracket is positioned in a defined position at the intersection before the first and the second concrete elements are brought to engagement.

According to an embodiment of the invention, the first attachment arrangement is located between the second attachment arrangement and the third attachment arrangement on said body.

According to an embodiment of the invention, the second attachment arrangement is arranged on a first end part of the body, which first end part is adapted to extend away from a lower surface of the first precast hollow concrete element and the second precast hollow concrete element. Accordingly, the second end part extends from the formed ceiling of the concrete elements and enables a support channel to be attached.

According to an embodiment of the invention, the third attachment arrangement is arranged on a second end part of the body, which second end part is adapted to extend away from an upper surface of the first precast hollow concrete element and the second precast hollow concrete element. Accordingly, the third attachment arrangement is configured to extend in a direction away from the

ceiling, which would form a floor for a second level on the building. Accordingly, the third attachment arrangement would not be visible from within the first level of the building. By having the third attachment arrangement extending away from an upper surface of the first precast hollow concrete element allows the bracket to be held in a defined position at the intersection regardless of the flatness of the upper surface of the first precast hollow concrete element.

According to an embodiment of the invention, the first end part and second end part constituting opposite end parts of the body located on the longitudinal axis of the body of the bracket. Accordingly, the first attachment arrangement is located between second attachment arrangement and the third attachment arrangement.

According to an embodiment of the invention, the body of the bracket comprises a weakening between the first attachment arrangement and the third attachment arrangement adapted to enable the third portion of the body to be separated from the body after the bracket has been firmly attached at said intersection.

The third attachment arrangement has the function of enabling the bracket to be positioned during the bracket is confined in the intersection as the first precast hollow concrete element and the second precast hollow concrete element are brought towards each other. Thereafter, the third attachment arrangement can be removed by means of the weakening.

According to an embodiment of the invention, the weakening comprises a cutout in the body at a location between the first attachment arrangement and the third attachment arrangement. By means of the cutout, the third attachment arrangement can easily be separated from the rest of the body of the bracket. For example, the third attachment arrangement can be removed by bending the second end portion of the body in respect to the cutout.

According to an embodiment of the invention, the second attachment arrangement comprises receipt means for attachment of the support channel to the bracket. The receipt means is for example one or more openings in the second portion of the body adapted to receive a bolt assembly. The second attachment arrangement enables a support channel to be attached to the bracket, such as by means of a bolt assembly.

The object of the invention is further obtained by means of a support channel arrangement for attachment of a support channel to a pre-cast hollow concrete element, the support channel arrangement comprise at least one support the bracket, wherein each bracket comprising

- an elongated body,
- a first attachment arrangement for attaching the bracket to the concrete element, which first attachment arrangement is located at a first portion of the body, wherein the first attachment arrangement of the bracket comprises a resilient member protruding away from an elongated axis of the body, and

- a second attachment arrangement for attaching a support channel to the bracket, which second attachment arrangement is located at a second portion of the body.

The support channel arrangement is characterized in that the support channel arrangement comprises a first precast hollow concrete element and a second precast hollow concrete element arranged as separate elements adapted to be brought to engagement so that an intersection is formed between the them, wherein the first attachment arrangement is configured to be confined at an said intersection between the first precast hollow concrete element and the second precast hollow concrete element with the resilient member acting on at least one of the first precast hollow concrete element and the second pre-cast hollow concrete element.

According to an embodiment of the invention, the resilient member comprises a spring biased tongue adapted to engage with at least one of the first precast hollow concrete element and the second precast hollow concrete element when the bracket is arranged at said intersection. Preferably, the spring biased tongue is configured to engage with both the first precast hollow concrete element and the second precast hollow concrete element when the bracket is arranged at said intersection.

According to an embodiment of the invention, the spring biased tongue is adapted to engage with a rim part of at least one of the first precast hollow concrete element and the second precast hollow concrete element when the bracket is arranged at said intersection.

According to an embodiment of the invention, the spring biased tongue comprises a punched- out part of the first portion of the body.

According to an embodiment of the invention, the first precast hollow concrete element and the second precast hollow concrete element are adapted to form a compartment at said intersection, wherein the first portion of the body is configured to, when confined in said compartment, form a space in the compartment adapted to be filled with a flowable solidifier.

According to an embodiment of the invention, the first portion of the body is flat comprising two opposite sides, wherein the first portion of the body is configured to form said space on the opposite sides of the first portion of the body.

According to an embodiment of the invention, the body at the first portion is configured in a U-form.

According to an embodiment of the invention, the bracket further comprises a third attachment arrangement comprising means for releasable connecting the bracket to an assembly frame, which third attachment arrangement is located at a third portion of the body.

According to an embodiment of the invention, the means for re-leasable connecting the bracket comprises one of a magnetic member adapted to engage with a ferromagnetic part of said assem-

bly frame and a ferromagnetic part adapted to be to engage with a magnetic member of the assembly frame.

According to an embodiment of the invention, the third portion of the body comprises a central member extending parallel with a longitudinal axis of the bracket and a flanged member extending away from the central member, wherein the flanged member is adapted to bear at an upper surface of the first precast hollow concrete element.

According to an embodiment of the invention, the first attachment arrangement is located between the second attachment arrangement and the third attachment arrangement on said body.

According to an embodiment of the invention, the second attachment arrangement is arranged on a first end part of the body, which first end part is adapted to extend away from a lower surface of the first pre-cast hollow concrete element and the second precast hollow concrete element.

According to an embodiment of the invention, the third attachment arrangement is arranged on a second end part of the body, which second end part is adapted to extend away from an upper surface of the first pre-cast hollow concrete element and the second precast hollow concrete element.

According to an embodiment of the invention, the body comprises a weakening between the first attachment arrangement and the third attachment arrangement adapted to enable the third portion of the body to be separated from the body after the bracket has been firmly attached at said intersection.

According to an embodiment of the invention, the weakening comprises a cutout in the body at a location between the first attachment arrangement and the third attachment arrangement.

The object of the invention is further obtained by means of a system for attachment of one or more support brackets to a precast hollow concrete element. The system comprises a support channel arrangement according to any of above embodiments with one or more support brackets and an assembly frame adapted to hold the one or more support brackets while confining them between a first precast hollow concrete element and a second precast hollow concrete element.

The system comprises one or more support brackets according to any of above embodiments and an assembly frame adapted to hold the one or more support brackets while confining them between a first precast hollow concrete element and a second precast hollow concrete element.

According to an embodiment of the invention, the assembly frame comprises a receipt structure for enabling a releasable attachment of the one or more support brackets to the assembly frame. The assembly frame is used for holding and orienting the one or more brackets as the first precast hollow concrete element and the second precast hollow concrete element are brought towards each other.

According to an embodiment of the invention, the receipt structure comprises a ferromagnetic part for forming the releasable attachment to a magnetic member of said one or more support brackets or a magnetic member for forming a releasable attachment to a ferromagnetic part of said one or more support brackets.

According to an embodiment of the invention, the receipt structure comprises a channel adapted to receive support brackets in a plurality of positions. By means of the channel, a plurality of brackets may be releasable attached to the assembly frame. Furthermore, the channel enables the distance between adjacent brackets to be adjusted. Accordingly, the cannel enables the density of brackets to be adjusted for supporting support channels of different capacity and weight.

According to an embodiment of the invention, the assembly frame is configured to be reoriented from a setup orientation, in which the one or more support brackets are arranged outside the intersection, to an installation orientation, in which the one or more support brackets extend between an upper surface and a lower surface of the first precast hollow concrete element and the second precast hollow concrete element at the intersection between them.

According to an embodiment of the invention, the assembly frame comprises one or more support arms extending from the receipt structure and adapted to be supported by an upper surface of the first precast hollow concrete element when positioning the one or more brackets to the assembly frame. By means of the support arms, the assembly frame is maintained in a stable position in the setup orientation.

According to an embodiment of the invention, the assembly frame comprises a stop member adapted to be supported by a rim surface of the first precast hollow concrete element when positioning the one or more brackets to the assembly frame, which rim surface is constituting said intersection. The stop member is for example a ridge or a protrusion adapted to engage with an edge between the upper surface and the rim surface of the first precast hollow concrete element. By means of the stop member, the assembly frame is maintained in a stable position in the installation orientation.

According to an embodiment of the invention, the system further comprises a support channel adapted to be attached to the second attachment arrangement of the support bracket.

The object of the invention is further obtained by means of a support channel installation comprising one of more support brackets according to any of above embodiment and a support channel attached to the one or more support brackets.

According to an embodiment of the invention, the installation further comprises a first precast hollow concrete element and a second precast hollow concrete element, wherein the concrete elements are arranged forming an intersection in which the one of more support brackets are confined.

The object of the invention is further obtained by means of a method for attaching one or more support brackets to a precast hollow concrete element by means of a support channel arrangement comprising an assembly frame and said one or more support brackets, the method comprises:
- attaching one or more support bracket to a receipt structure of the assembly frame,
- orienting the assembly frame in an installation orientation, in which the one or more support brackets extend between an upper surface and a lower surface of the first hollow concrete element, and
- positioning a second hollow concrete element next to the first hollow concrete element so that said one or more support brackets are confined at an intersection between the first hollow concrete element and the second hollow concrete element.

According to an embodiment of the invention, the method comprises:
- arranging the assembly frame on the first precast hollow concrete element in a setup orientation so that one or more support arms of the assembly frame are supported by the upper surface of the first precast hollow concrete element, and
- attaching one or more support bracket to the receipt structure of the assembly frame while the assembly frame is the in a setup orientation on the first precast hollow concrete element.

According to an embodiment of the invention, the method comprises:
- arranging the assembly frame on a first precast hollow concrete element in a setup orientation so that one or more further arms of the assembly frame are supported by a rim surface of the first precast hollow concrete element.

According to an embodiment of the invention, the method comprises:
- reorienting the assembly frame from a setup orientation to an installation orientation after the one or more support bracket have been position to the receipt structure of the assembly frame.

According to an embodiment of the invention, the method comprises:
- positioning a second hollow concrete element so that a part of the rim of the second hollow concrete element contacts a part of the rim of the second hollow concrete element, thereby forming an compartment at the intersection in which said one or more support brackets are confined.

According to an embodiment of the invention, the method comprises:
- filling a space of the compartment at the intersection between the first hollow concrete element and second hollow concrete element with a flowable solidifier, thereby firmly attaching said one or more support brackets at the intersection.

According to an embodiment of the invention, the method comprises:
- detaching the one or more support brackets from the receipt structure of the assembly frame after that the one or more support brackets have been confined at the intersection between the first hollow concrete element and the second hollow concrete element.

According to an embodiment of the invention, the method comprises:
- separating a third portion of the body of the one or more support brackets from the first portion and second portion of the body after the one or more support brackets have been confined at the intersection between the first hollow concrete element and the second hollow concrete element.

The object of the invention is further obtained by means of a use of a support bracket according to any of above embodiments.

The object of the invention is further obtained by means of a use of a support channel arrangement according to any of above embodiments.

Brief description of drawings

In the following is described an example of a preferred embodiment illustrated in the accompanying drawings, wherein:

Fig. 1a discloses a schematic side view of a support channel arrangement comprising a support bracket and an assembly frame according to an embodiment of the invention;

Fig. 1b discloses a schematic side view of a support channel arrangement comprising a support bracket and an assembly frame according to a further embodiment of the invention;

Fig. 2a discloses a schematic perspective view of the support bracket in fig. 1a in further details;

Fig. 2b discloses a schematic perspective view of the assembly frame in fig. 1a in further details;

Fig. 2c discloses a schematic perspective view of the assembly frame in fig. 1a in further details, where three support brackets have been attached to the assembly frame;

Fig. 2d discloses a schematic perspective view of the support bracket in fig. 1b in further details;

Fig. 3 discloses a schematic view of a support channel installation comprising a plurality of support brackets in fig. 1 and a support channel attached to the support brackets;

Fig. 4a discloses a flow chart of a method for attaching one or more support brackets to a precast hollow concrete element according to an embodiment of the invention;

Fig. 4b discloses a flow chart of a method for attaching one or more support brackets to a precast hollow concrete element according to a further embodiment of the invention;

Fig. 4c discloses a flow chart of a method for attaching one or more support brackets to a precast hollow concrete element according to a further embodiment of the invention; and

Fig. 5a-f discloses steps of the methods in fig. 4a and 4b for attaching one or more support brackets to a precast hollow concrete element.

Detailed description

In fig. 1a a schematic side view of a support channel arrangement 1 according to an embodiment of the invention for attachment of one or more support brackets 5 to a precast hollow concrete element 10a, 10b is disclosed. The support channel arrangement 1 comprises the support bracket 5 and an assembly frame 12 releasable attaching the one or more support brackets 5.

The precast hollow concrete element 10a, 10b are used for establishing a ceiling of a building by means of connecting a first precast hollow concrete element 10a with a second precast hollow concrete element 10b. The formed ceiling is for example part of a corridor of the building to which a support channel 14 is to be attached, see fig. 3 disclosing an example of an installation 16 comprising the support bracket 5 and the support channel 14.

The building may be arranged with further level above the ceiling and accordingly the precast hollow concrete element 10a, 10b may simultaneous form the floor of a level above the ceiling. The first precast hollow concrete element 10a and the second precast hollow concrete element 10b have a respective upper surface US and a lower surface LS. The lower surface LS constituting the ceiling of a first level of the building. The upper surface US is a surface opposite to the lower surface LS and is constituting the floor of a second level of the building above the first level.

The precast hollow concrete element 10a, 10b comprises a structure 20 with a hollow inner part 22. In the disclosed embodiment, the precast hollow concrete element 10a, 10b comprises a plurality of parallel channels extending in the concrete element 10a, 10b. The structure 20 of the precast hollow concrete element 10a, 10b comprises reinforcement elements, such as steel reinforcing bars (rebars), for improving the strength of the precast hollow concrete elements 10a, 10b. The reinforcement elements are not disclosed in fig. 1a.

It is difficult to attach prior art support brackets to such precast hollow concrete elements 10a, 10b. The material of the structure 20 at the channels 22 is thin and for certain application the material is not sufficient for holding the weight of the support channel 14. The material of the structure 20 between the channels is provided with reinforcement elements. The operation of drilling into these locations may damage the reinforcement elements and accordingly reduce the strength of the precast hollow concrete elements 10a, 10b. Furthermore, the material of the structure 20 between the channels 22 is thin and it is difficult to accurately drill into the material of the structure 20. The operation of drilling and attaching prior art brackets is furthermore done at elevated height at the ceil-

ing and accordingly constitutes a risk for workers involved.

In fig. 2a an embodiment of the support bracket 5 of the invention is shown. The support bracket 5 comprises a first attachment arrangement 30, a second attachment arrangement 32 and a third attachment arrangement 34. The first attachment arrangement 30 is configured for attaching the bracket 5 to the precast hollow concrete elements 10a, 10b and comprises a resilient member 40. The second attachment arrangement 32 is configured for attaching a support channel 14 to the bracket 5, see fig. 3. The third attachment arrangement 34 is configured for releasable connecting the bracket 5 to the assembly frame 12.

In fig. 1a the support bracket 5 is in a state connected to the assembly frame 12 by means of the third attachment arrangement 34. The assembly frame 12 is supported on the upper surface US of the first the first precast hollow concrete element 10a. The assembly frame 12 is oriented so that the support bracket 5 is extending from the upper surface US to the lower surface LS at a rim of the first precast hollow concrete element 10a. The second precast hollow concrete element 10b has been brought to connection with the first precast hollow concrete element 10a so that the support bracket 5 is confined at an intersection 45 between the two precast hollow concrete elements 10a, 10b. The resilient member 40 is acting on a rim surface RS of the second precast hollow concrete element 10b, thereby firmly securing the second attachment arrangement 32 between the first precast hollow concrete element 10a and the second precast hollow concrete element 10b at the intersection 45.

The support bracket 5 will be discussed in detail with reference to fig. 2b disclosing a schematic perspective view of the support bracket 5 in fig. 1a. The bracket 5 comprises and elongated body 48 that extends along a longitudinal axis L.

The first attachment arrangement 32 for attaching the bracket 5 to the precast hollow concrete element 10a, 10b is located at a first portion 50 of the body 48. The second attachment arrangement 32 for attaching a support channel 14 to the bracket 5 is located at a second portion 52 of the body 48. The third attachment arrangement 34 for releasable connecting the bracket 5 to the assembly frame 12 is located at a third portion 54 of the body 48.

The first attachment arrangement 30 comprises the resilient member 40 extending from the first portion 50 of the body 48. The resilient member 40 is adapted to act on the rim surface RS of one or both of the precast hollow concrete elements 10a, 10b. The resilient member 40 has the function of accommodating to a compartment formed at the intersection 45 between the two precast hollow concrete elements 10a, 10b. The resilient member 40 further assures that the first portion 50 of the body 48 is firmly wedged between the rim surfaces RS of the two precast hollow concrete elements 10a, 10b.

In the disclosed embodiment the resilient member 40 comprises a spring biased tongue extending

from the first portion 50 of the body 48. Preferably, the spring biased tongue has been punched out from the first portion 50 of the body 48 when manufacturing the bracket 5.

The first portion 50 of the body 48 is flat comprising two opposite sides and is configured to be arranged in the compartment at the intersection 45 between the two precast hollow concrete elements 10a, 10b so that a space is formed on opposite sides of the first portion 50 of the body 48. The space in the compartment is adapted to be filled with a flowable solidifier that further secures the bracket 5 to the intersection 45. The flowable solidifier has further the function of attaching the two precast hollow concrete elements 10a, 10b together. The flowable solidifier is for example a concrete material.

In the disclosed embodiment, the first portion 50 of the body 48 is configured in a U-form with two legs 56 contacting the rim surface RS of one of the precast hollow concrete elements 10a, 10b and the spring biased tongue contacting the rim surface RS of the other of the precast hollow concrete element 10a, 10b. In the disclosed embodiment, the two legs are provided with a serrated contact portion for engagement with one of the precast hollow concrete elements 10a, 10b. It shall be understood that the feature of the U-form and the serrated contact portion are preferable features but not essential for obtaining the technical effect of the invention.

The second attachment arrangement 32 comprises receipt means for attachment of a support channel 14 to the bracket 5. In the disclosed embodiment, the second portion 52 of the body 48 comprises a plurality of opening 58 adapted to receive a bolt assembly for attachment of the support channel 14, see fig. 3. The support channel 14 relates to a framework for holding products such as cable ladders 60a, pipes 60b and trays 60c.

The third attachment arrangement 34 comprises a ferromagnetic material adapted to engage with a magnetic member 62 of the assembly frame, see fig. 2c. Alternatively, the third attachment arrangement 34 comprises the magnetic member 62 adapted to engage with a ferromagnetic part of the assembly frame 12. The magnetic member 62 is for example a permanent magnet.

In the disclosed embodiment, the third portion 54 of the body 48 comprises a central member 63a extending parallel with a longitudinal axis L of the support bracket 5 and a flanged member 63b extending away from the central member 63a. In the disclosed embodiment, the flanged member 63b is arranged perpendicular in respect to the central member 63a. The flanged member 63b is adapted to bear at an upper surface US of the first precast hollow concrete element 10a, see fig. 1a. By means of the configuration of the central member 63a and the flanged member 63b, the bracket 5 is positioned in a defined position at the intersection 45 before the first concrete element 10a and the second concrete element 10b are brought to engagement.

In fig. 1b a schematic side view of a support channel arrangement 1 according to an embodiment of the invention for attachment of one or more support brackets 5 to a precast hollow concrete ele-

ment 10a, 10b is disclosed. The support bracket in fig. 1b is disclosed in further detail in fig. 2d.

The embodiment in fig. 1b differs from the embodiment in fig. 1a in that the third portion 54 of the body 48 of the support bracket 5 is adapted to extend away from an upper surface US of the first precast hollow concrete element 10a and the second precast hollow concrete element 10b. Accordingly, the third attachment arrangement 34 is configured to extend in a direction away from the ceiling, which would form a floor for a second level on the building. By having the third attachment arrangement 34 extending away from an upper surface US of the first precast hollow concrete element 10a allows the bracket 5 to be held in a defined position at the intersection 5 regardless of the flatness of the upper surface US of the first precast hollow concrete element 10.

The embodiment in fig. 1b further differs from the embodiment in fig. 1a, in that the body 48 of the bracket 5 comprises a weakening 64 between the first attachment arrangement 30 and the third attachment arrangement 34, see fig. 2d. The weakening 64 is adapted to enable the third portion 54 of the body 48 to be separated from the body 48 after the bracket 5 has been firmly attached at the intersection 45. In the disclosed embodiment, the weakening is illustrated as a cutout in the body 48 at a location between the first attachment arrangement 30 and the third attachment arrangement 34. It shall however be understood that the bracket 5 may be provided with other forms of weakening, such an incipient cut, a necking, etc., for facilitating the removal of the third portion 54 of the body 48.

With reference to fig. 2b and 2c, a schematic perspective view of the assembly frame 12 in fig. 1 is disclosed in further details. The assembly frame 12 comprises a receipt structure 70 for enabling a releasable attachment of the one or more support brackets 5 to the assembly frame 12.

In the disclosed embodiment, the receipt structure 70 comprises a channel 72 adapted to receive support brackets 5 in a plurality of positions. In fig. 2b, three support brackets 5 have been attached to the channel in separate positions.

In the disclosed embodiment, the receipt structure 70 comprises a magnetic member 62 adapted to enable an attachment with a ferromagnetic part of the third portion 54 of the body 48 of the support bracket 5. It shall be understood that in an alternative embodiment, the receipt structure 70 comprises a ferromagnetic part adapted to enable an attachment of a magnetic member 62 at the third portion 54 of the body 48 of the support brackets 5.

The assembly frame 12 is configured to be oriented in a setup orientation on the upper surface US of the first precast hollow concrete element 10a. The setup orientation enables the one or more support brackets 5 to be attached to the receipt structure 70. The assembly frame 12 is configured to be reoriented from the setup orientation to an installation orientation after the brackets 5 have been attached to the assembly frame 12. In the installation orientation, the one or more support brackets 5 extend between an upper surface US and a lower surface LS of the first precast hollow

concrete element 10a. The assembly frame 12 has the function of holding the one or more brackets 5 at the desired position at the intersection 45 as the two precast hollow concrete elements 10a, 10b are brought to connection.

The assembly frame 12 comprise one or more support arms 74 extending from the receipt structure 70. The support arms 74 are adapted to be supported by an upper surface US of the first precast hollow concrete element 10a when positioning the one or more brackets 5 to the assembly frame 12 in the setup orientation. In the disclosed embodiment, two support arms 74 are shown arranged connected into a loop. However, it shall be understood that other numbers or configurations of support arms 74 maybe be used for the assembly frame 12.

The assembly frame 12 further comprises one or more stop member 76 adapted to be supported by a rim surface RS of the first precast hollow concrete element 10a when positioning the one or more brackets 5 to the assembly frame 12. Thereby, it is assured that the assembly frame 12 is in a static position in the setup orientation on the first precast hollow concrete element 10a.

The invention will now be explained with reference to fig. 4a and relevant figures of fig. 5a-f. Fig. 4a discloses is a flow chart of a method for attaching one or more support brackets 5 to a precast hollow concrete element 10a, 10b according to an embodiment of the invention.

In a step 110, the method comprises attaching one or more support brackets 5 to the receipt structure 70 of the assembly frame 12. The assembly frame 12 allows a plurality of support brackets 5 to be positioned at desired position at the rim surface RS of the first precast hollow concrete element 10a. The step 110 relates to a setup stage of the method that for example is illustrated in fig. 5a and 5b. In fig. 5a and 5b, the assembly frame 12 is positioned on the first precast hollow concrete element 10a. However, it shall be understood that the process of attaching the one or more cable brackets 5 to the receipt structure 70 may be done at other locations.

In a step 120, the method comprises orienting the assembly frame 12 in an installation orientation. Thereby, the assembly frame 12 is oriented so that the one or more support brackets 5 are extending between an upper surface US and a lower surface LS at the rim surface RS of the first precast hollow concrete element 10a. The step 120 is illustrated by fig. 5c.

In a step 130, the method comprises positioning the second precast hollow concrete element 10b next to the first precast hollow concrete element 10a so that the one or more support brackets 5 are confined at an intersection 45 between the first precast hollow concrete element 10a and the second precast hollow concrete element 10b. The one or more support brackets 5 are held by the assembly frame 12 while the second precast hollow concrete element 10b is brought to contact with the first precast hollow concrete element 10a. Thereby, an attachment of the one or more support brackets 5 is formed at the intersection 45 to the precast hollow concrete elements 10a, 10b. The step 130 is illustrated by fig. 5d and 5e.

The invention will now be explained with reference to fig. 4b and relevant figures of fig. 5a-f. Fig. 4b discloses is a flow chart of a method for attaching one or more support brackets 5 to a precast hollow concrete element 10a, 10b according to a further embodiment of the invention. The method of the embodiment in fig. 4b differs from the embodiment in fig. 4a with the following steps.

In a step 105, the method comprises arranging the assembly frame 12 on the first precast hollow concrete element 10a in a setup orientation so that one or more support arms of the assembly frame 12 are supported by the upper surface US of the first precast hollow concrete element 10a. The assembly orientation enables one or more support brackets 5 to be attached by workers safely located at the upper surface US of the first precast hollow concrete element 10a. By means of the one or more support arms, the assembly frame 12 is supported in a static position. The step 105 is illustrated by fig. 5a.

In the step 120 of orienting the assembly frame 12 in the installation orientation, the step involves reorienting the assembly frame 12 from the setup orientation to the installation orientation after the one or more support bracket 5 have been position to the receipt structure 70 of the assembly frame 12. The reorientation of the assembly frame 12 is preferably done from the upper surface US of the first precast hollow concrete element 10a. For example, by means of that a worker manually reorients the assembly frame 12. Fig. 5c discloses the step in which the assembly frame 12 has been reoriented to the installation orientation.

The method according to the further embodiment of the invention further comprises, in a step 140, detaching the one or more support brackets 5 from the receipt structure 70 of the assembly frame 12 after that the one or more support brackets 5 have been confined at the intersection 45 between the first precast hollow concrete element 10a and the second precast hollow concrete element 10b. Thereby, the assembly frame 12 is used for further attachments of support brackets 5 in a corresponding manner. The step 140 is illustrated by fig. 5f.

In a step 150, the method comprises filling a space of the compartment at the intersection 45 between the first precast hollow concrete element 10a and second precast hollow concrete element 10b with a flowable solidifier. After the flowable solidifier has solidified, a firm permanent attachment of the one or more support brackets 5 at the intersection 45 has been established that allows a support channel 14 to be attached. The flowable solidifier is for example a concrete material.

The invention will now be explained with reference to fig. 4c and relevant figures of fig. 5a-f relating to a further embodiment of the invention.

The embodiment in fig. 4c differs from the embodiment in fig. 4b in that the method relates to use of one or more support brackets 5 according to the embodiment in fig. 2d. The method differs from the method in fig. 4b in that the method comprises, in a step 145, separating the third portion 54 of the body 48 of the one or more support brackets 5 from the first portion 50 and second portion 52

of the body 48. The separation is done after the one or more support brackets 5 have firmly been attached at the intersection 45 between the first hollow concrete element 10a and the second hollow concrete element 10b. The step of separating the third portion 54 of the body 48 involves for example bending the third portion 54 of the body 48 in respect to a weakening. Alternatively, the third portion 54 of the body 48 is separated by use of a cutting tool.

It should be noted that the above-mentioned embodiments illustrate rather than limit the invention, and that those skilled in the art will be able to design many alternative embodiments without departing from the scope of the appended claims. In the claims, any reference signs placed between parentheses shall not be construed as limiting the claim. Use of the verb "comprise" and its conjugations does not exclude the presence of elements or steps other than those stated in a claim. The article "a" or "an" preceding an element does not exclude the presence of a plurality of such elements. The mere fact that certain measures are recited in mutually different dependent claims does not indicate that a combination of these measures cannot be used to advantage.

C l a i m s

1. A support channel arrangement (1) for attachment of a support channel (14) to a precast hollow concrete element (10a, 10b), the support channel arrangement (1) comprise at least one support the bracket (5), , wherein each bracket comprising
   - an elongated body (48),
   - a first attachment arrangement (30) for attaching the bracket (5) to the concrete element (10a, 10b), which first attachment arrangement (30) is located at a first portion (50) of the body (48), wherein the first attachment arrangement (30) of the bracket comprises a resilient member (40) protruding away from an elongated axis (L) of the body (48), and
   - a second attachment arrangement (32) for attaching a support channel (14) to the bracket (5), which second attachment arrangement (32) is located at a second portion (52) of the body (48),

   c h a r a c t e r i s e d i n that

   the support channel arrangement (1) comprises a first precast hollow concrete element (10a) and a second precast hollow concrete element (10b) arranged as separate elements adapted to be brought to engagement so that an intersection (45) is formed between the them, wherein the first attachment arrangement (30) is configured to be confined at said intersection (45) with the resilient member (40) acting on at least one of the first precast hollow concrete element (10a) and the second precast hollow concrete element (10b).

2. The support channel arrangement (1) according to claim 1, wherein the resilient member (40) comprises a spring biased tongue adapted to engage with at least one of the first precast hollow concrete element (10a) and the second precast hollow concrete element (10b) when the bracket (5) is arranged at said intersection (45).

3. The support channel arrangement (1) according to claim 2, wherein the spring biased tongue is adapted to engage with a rim part of at least one of the first precast hollow concrete element (10a) and the second precast hollow concrete element (10b) when the bracket (5) is arranged at said intersection (45).

4. The support channel arrangement (1) according to claim 3, wherein the spring biased tongue comprises a punched-out part of the first portion (50) of the body (48).

5. The support channel arrangement (1) according to any of the previous claims, wherein the first precast hollow concrete element (10a) and the second precast hollow concrete element (10b) are adapted to form a compartment at said intersection (45), wherein the first portion (50) of the body (48) is configured to, when confined in said compartment, form a space in the compartment adapted to be filled with a flowable solidifier.

6. The support channel arrangement (1) according to any of the previous claims, wherein the first portion (50) of the body (48) is flat comprising two opposite sides, wherein the first portion (50) of the body (48) is configured to form said space on the opposite sides of the first portion (50) of the body (48).

7. The support channel arrangement (1) according to any of the previous claims, wherein the body (48) at the first portion (50) is configured in a U-form.

8. The support channel arrangement (1) according to any of the previous claims, wherein the bracket (5) further comprises a third attachment arrangement (34) comprising means for releasable connecting the bracket (5) to an assembly frame (12), which third attachment arrangement (34) is located at a third portion (54) of the body (48).

9. The support channel arrangement (1) according to claim 8, wherein the means for releasable connecting the bracket (5) comprises one of a magnetic member (62) adapted to engage with a ferromagnetic part of said assembly frame (12) and a ferromagnetic part adapted to be to engage with a magnetic member (62) of the assembly frame (12).

10. The support channel arrangement (1) according to any of claim 8-9, wherein the third portion (54) of the body (48) comprises a central member (63a) extending parallel with a longitudinal axis (L) of the bracket (5) and a flanged member (63b) extending away from the central member (63a), wherein the flanged member (63b) is adapted to bear at an upper surface (US) of the first precast hollow concrete element (10a).

11. The support channel arrangement (1) according to any of claim 8-10, wherein the first attachment arrangement (30) is located between the second attachment arrangement (32) and the third attachment arrangement (34) on said body (48).

12. The support channel arrangement (1) according to any of the previous claims, wherein the second attachment arrangement (32) is arranged on a first end part of the body (48), which first end part is adapted to extend away from a lower surface (LS) of the first precast hollow concrete element (10a) and the second precast hollow concrete element (10b).

13. The support channel arrangement (1) according to any of claim 8-12, wherein the third attachment arrangement (34) is arranged on a second end part of the body (48), which second end part is adapted to extend away from an upper surface (US) of the first precast hollow concrete element (10a) and the second precast hollow concrete element (10b).

14. The support channel arrangement (1) according to any of claim 8-13, wherein the body (48) comprises a weakening (64) between the first attachment arrangement (30) and the

third attachment arrangement (34) adapted to enable the third portion (54) of the body (48) to be separated from the body (48) after the bracket (5) has been firmly attached at said intersection (45).

15. The support channel arrangement (1) according to claim 14, wherein the weakening (64) comprises a cutout in the body (48) at a location between the first attachment arrangement (30) and the third attachment arrangement (34).

16. A system for attachment of one or more support brackets (5) to a precast hollow concrete element (10a, 10b), wherein the system comprises a support channel arrangement (1) according to any of claim 1-15 with one or more support brackets (5) and an assembly frame (12) adapted to hold the one or more support brackets (5) while confining them between a first precast hollow concrete element (10a) and a second precast hollow concrete element (10b).

17. The system according to claim 16, wherein the assembly frame (12) comprises a receipt structure (70) for enabling a releasable attachment of the one or more support brackets (5) to the assembly frame (12).

18. The system according to claim 17, wherein the receipt structure (70) comprises one of a ferromagnetic part for forming the releasable attachment to a magnetic member (62) of said one or more support brackets (5) and a magnetic member (62) for forming a releasable attachment to a ferromagnetic part of the one or more support brackets (5).

19. The system according to any of claim 17-18, wherein the receipt structure (70) comprises a channel (72) adapted to receive support brackets (5) in a plurality of positions.

20. The system according to any of claim 16-19, wherein the assembly frame (12) is configured to be reoriented from a setup orientation, in which the one or more support brackets (5) are arranged outside the intersection (45), to an installation orientation, in which the one or more support brackets (5) extend between an upper surface (US) and a lower surface (LS) of the first precast hollow concrete element (10a) and the second precast hollow concrete element (10b) at the intersection (45) between them.

21. The system according to any of claim 16-20, wherein the assembly frame (12) comprise one or more support arms extending from the receipt structure (70) and adapted to be supported by a first surface (US) of the first precast hollow concrete element (10a) when positioning the one or more brackets (5) to the assembly frame (12).

22. The system according to any of claim 16-21, wherein the assembly frame (12) comprises a stop member adapted to be supported by a rim surface (RS) of the first precast hollow

concrete element (10a) when positioning the one or more brackets (5) to the assembly frame (12), which rim surface (RS) is constituting said intersection (45).

23. The system according to any of claim 16-22, wherein the arrangement further comprises a support channel adapted to be attached to the second attachment arrangement (32) of the one or more support brackets (5).

24. A support channel installation (16), c h a r a c t e r i s e d i n that the installation (16) comprising a support channel arrangement (1) according to any of claim 1-15 and a support channel (14) attached to the one or more support brackets (5).

25. The support channel installation (16) according to claim 24, wherein the installation (16) further comprises a first precast hollow concrete element (10a) and a second precast hollow concrete element (10b), wherein the precast hollow concrete elements (10a, 10b) are arranged forming an intersection (45) in which the one of more support brackets (5) are confined.

26. A method for attaching one or more support brackets (5) to a precast hollow concrete element (10a, 10b) by means of a support channel arrangement (1) comprising an assembly frame (12) and said one or more support brackets (5), c h a r a c t e r i s e d i n that the method comprises:
- attaching one or more support brackets (5) to a receipt structure (70) of the assembly frame (12),
- orienting the assembly frame (12) in an installation orientation, in which the one or more support brackets (5) extend between an upper surface (US) and a lower surface (LS) of the first precast hollow concrete element (10a), and
- positioning a second precast hollow concrete element (10b) next to the first precast hollow concrete element (10a) so that said one or more support brackets (5) are confined at an intersection (45) between the first precast hollow concrete element (10a) and the second precast hollow concrete element (10b).

27. The method according to claim 26, wherein the method comprises:
- arranging the assembly frame (12) on the first precast hollow concrete element (10a) in a setup orientation so that one or more support arms of the assembly frame (12) are supported by the upper surface (US) of the first precast hollow concrete element (10a), and
- attaching one or more support brackets (5) to the receipt structure (70) of the assembly frame (12) while the assembly frame (12) is the in a setup orientation on the first precast hollow concrete element (10a).

28. The method according to any of claim 26-27, wherein the method comprises:
- arranging the assembly frame (12) on a first precast hollow concrete element (10a) in a

setup orientation so that a stop member (76) of the assembly frame (12) are supported by a rim surface (RS) of the first precast hollow concrete element (10a).

29. The method according to any of claim 26-28, wherein the method comprises:
- reorienting the assembly frame (12) from a setup orientation to an installation orientation after the one or more support brackets (5) have been position to the receipt structure (70) of the assembly frame (12).

30. The method according to any of claim 26-29, wherein the method comprises:
- positioning a second precast hollow concrete element (10b) so that a part of the rim of the second precast hollow concrete element (10b) contacts a part of the rim of the first precast hollow concrete element (10a), thereby forming an compartment at the intersection (45) in which the one or more support brackets (5) are confined.

31. The method according to any of claim 26-30, wherein the method comprises:
- filling a space of the compartment at the intersection (45) between the first precast hollow concrete element (10a) and second precast hollow concrete element (10b) with a flowable solidifier, thereby firmly attaching said one or more support brackets (5) at the intersection (45).

32. The method according to any of claim 26-31, wherein the method comprises:
- detaching the one or more support brackets (5) from the receipt structure (70) of the assembly frame (12) after that the one or more support brackets (5) have been confined at the intersection (45) between the first precast hollow concrete element (10a) and the second precast hollow concrete element (10b).

33. The method according to any of claim 26-32, wherein the method comprises:
- separating a third portion (54) of the body (48) of the one or more support brackets (5) from the first portion (50) and second portion (52) of the body (48) after the one or more support brackets (5) have been confined at the intersection (45) between the first precast hollow concrete element (10a) and the second precast hollow concrete element (10b).

34. Use of a support channel arrangement (1) according to any of claim 1-15.

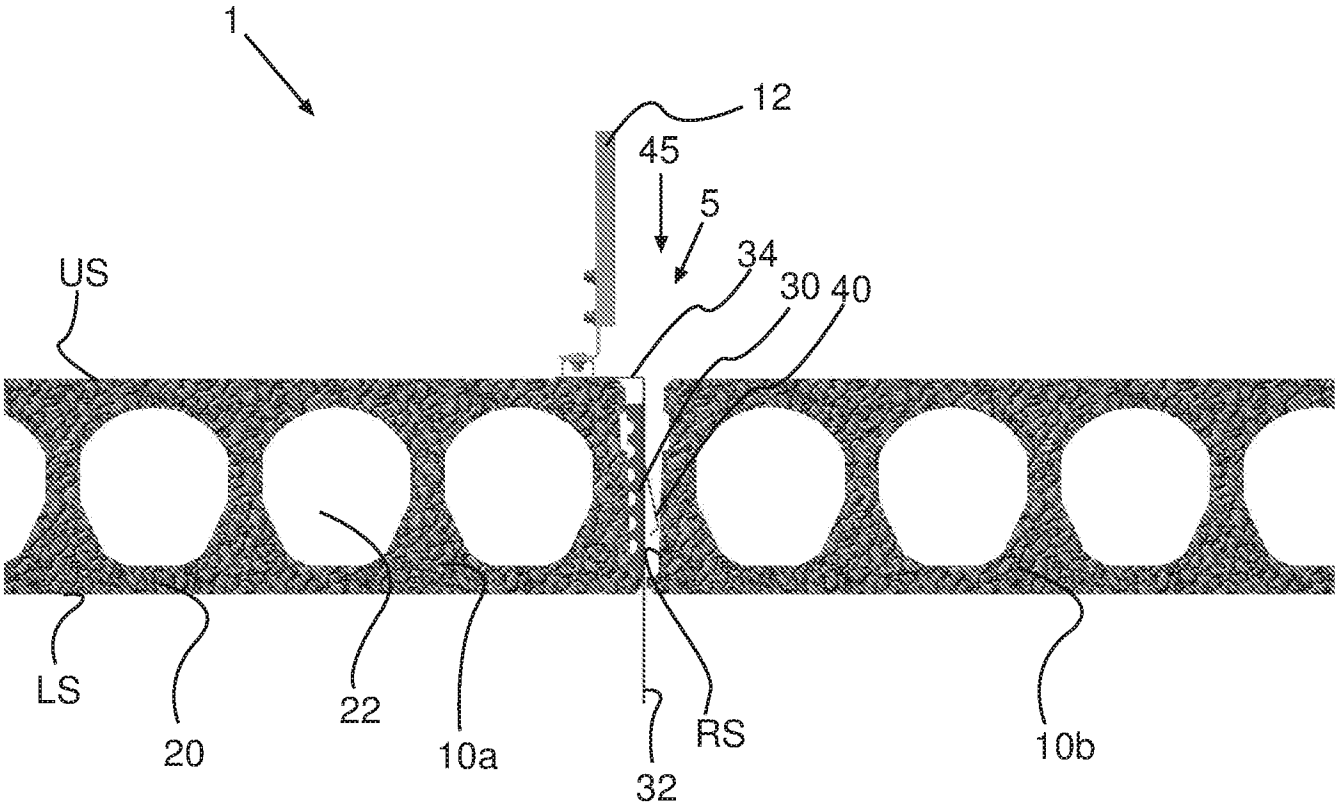

Fig. 1a

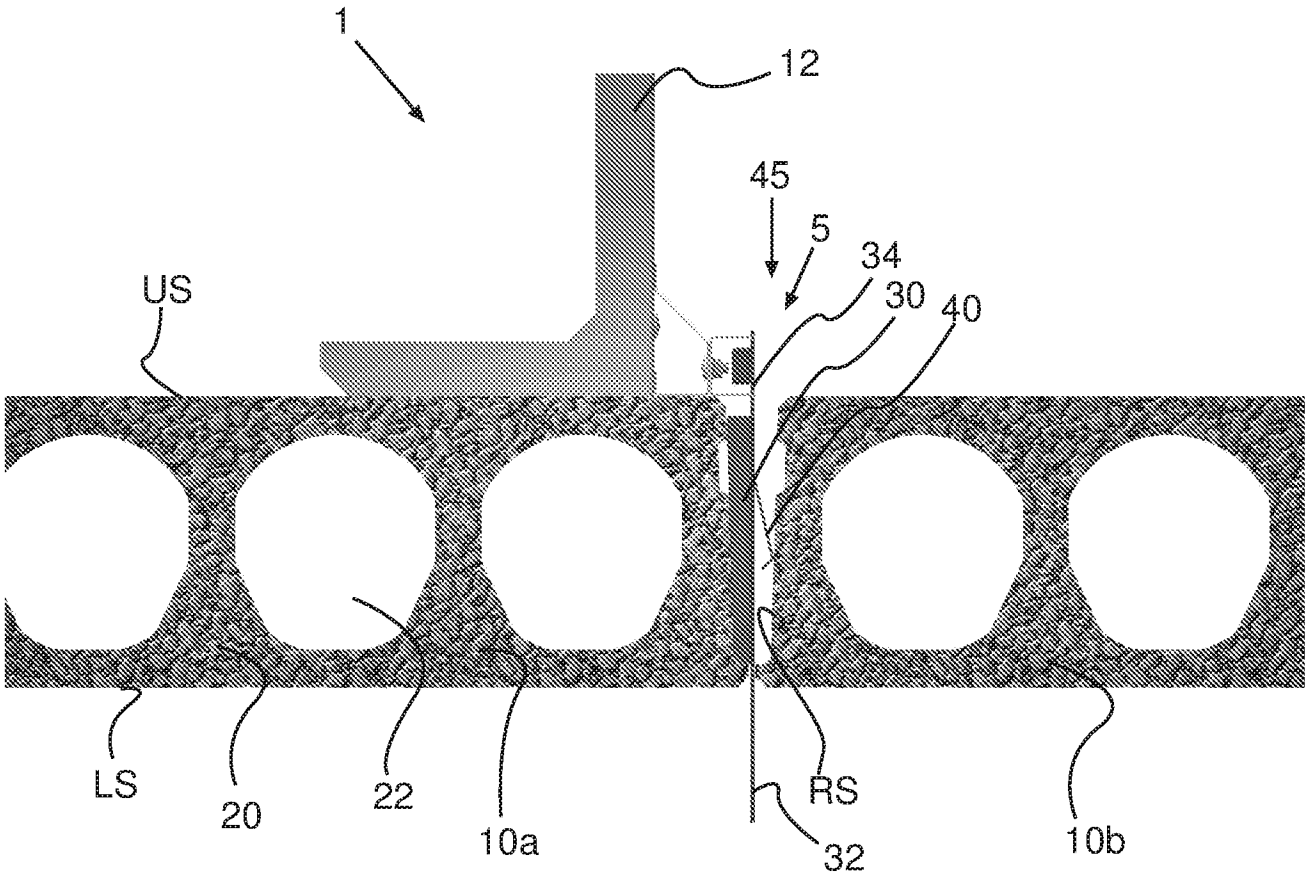

Fig. 1b

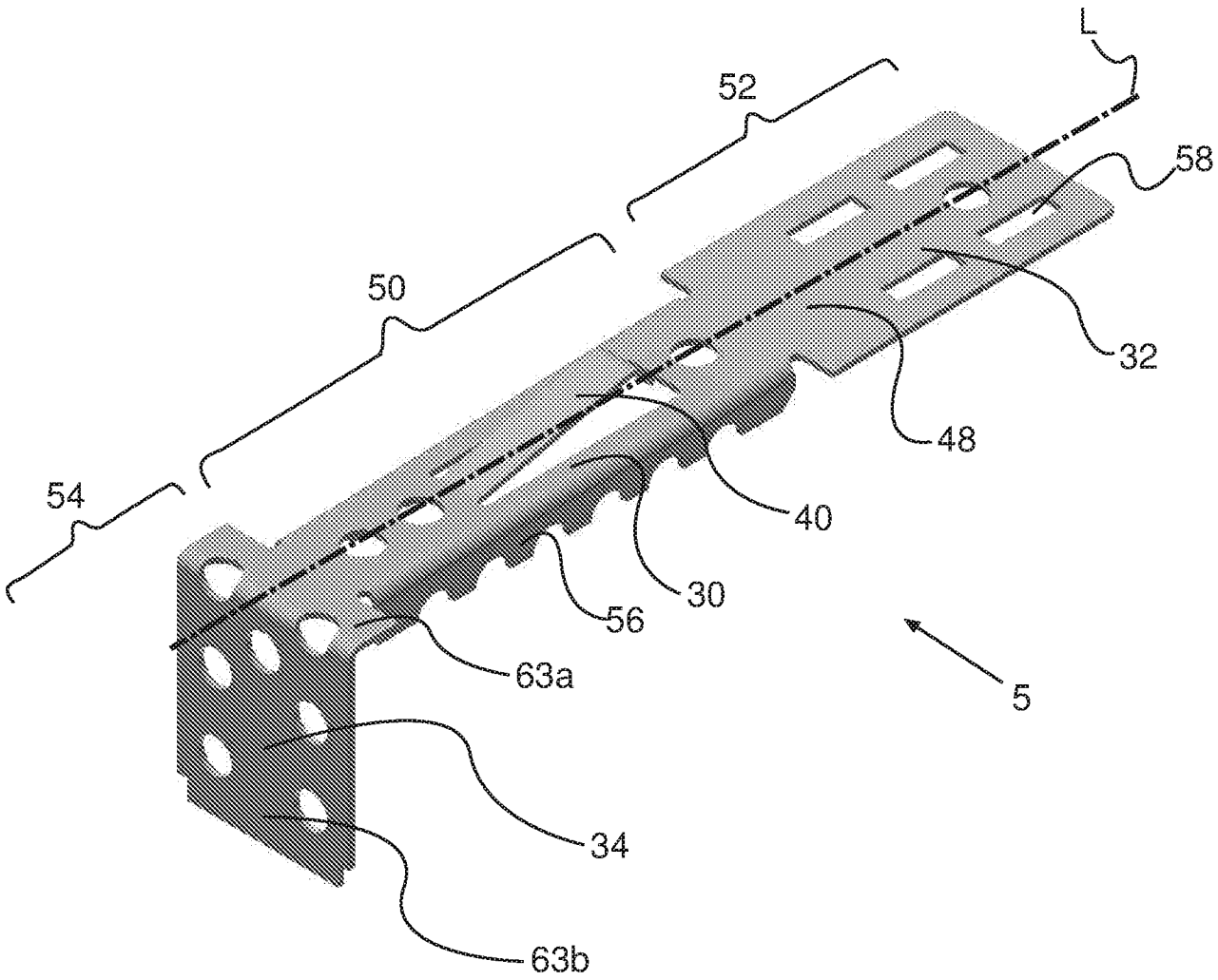

Fig. 2a

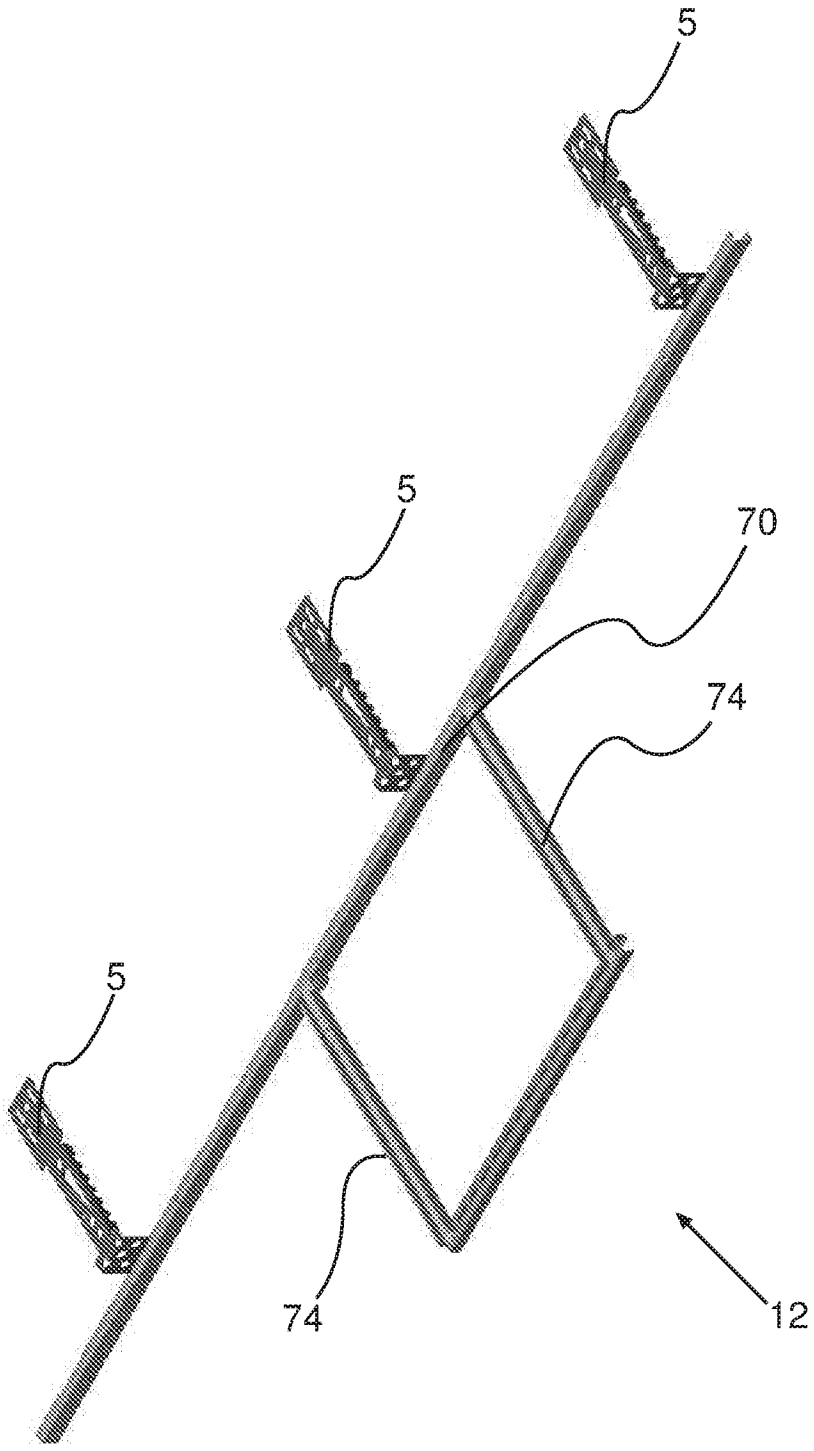

Fig. 2b

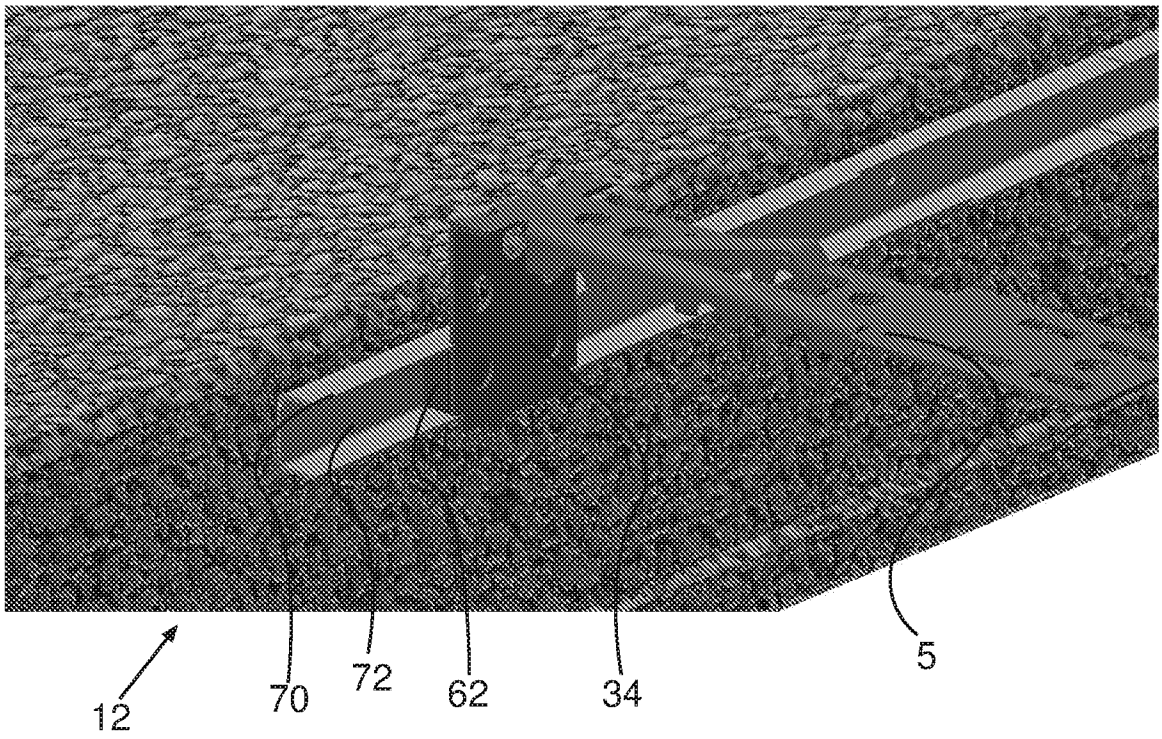

Fig. 2c

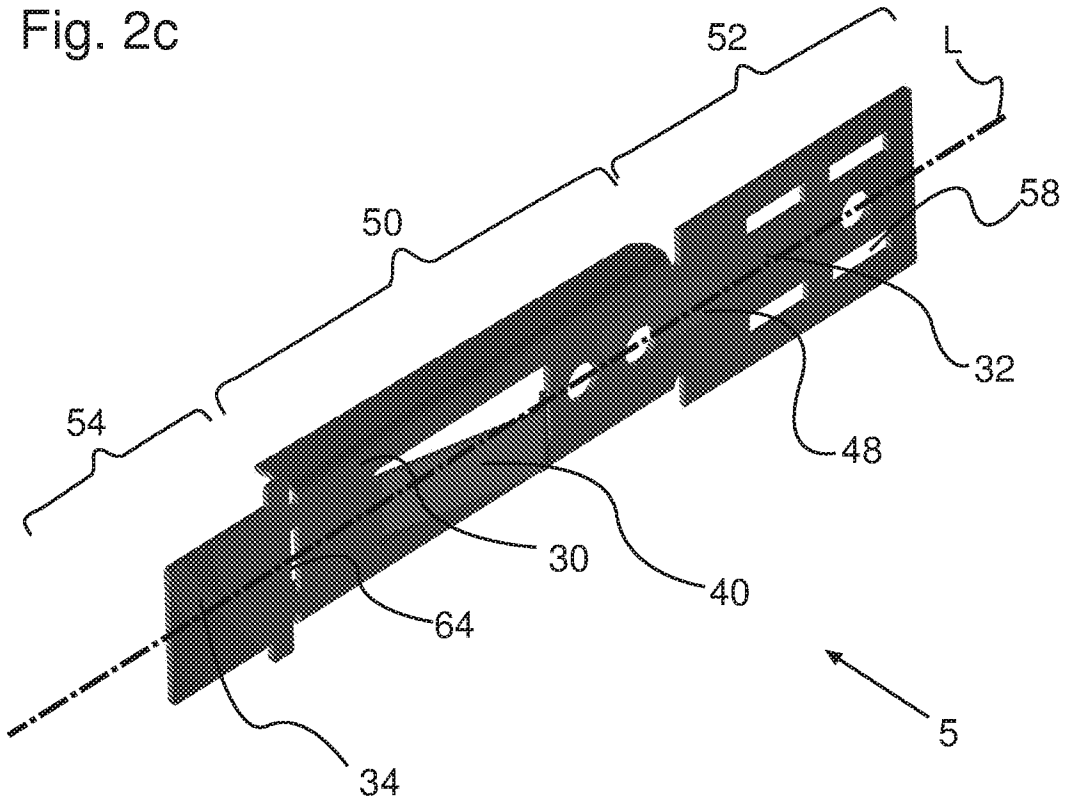

Fig. 2d

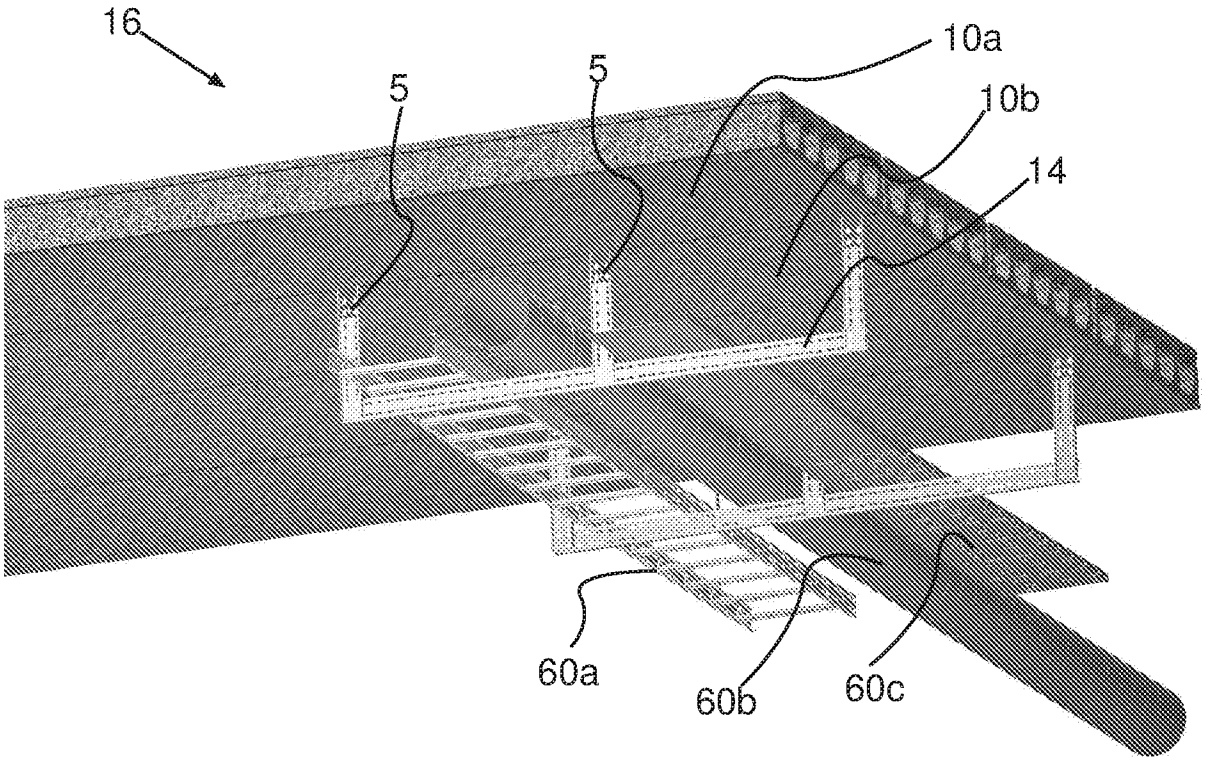

Fig. 3

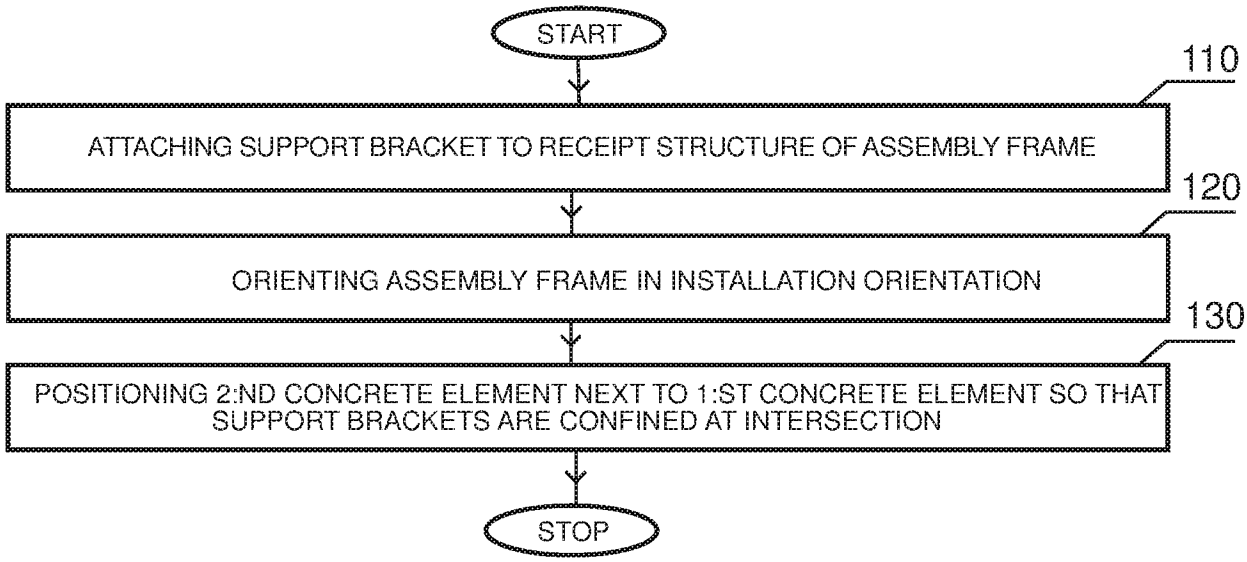
START
110
ATTACHING SUPPORT BRACKET TO RECEIPT STRUCTURE OF ASSEMBLY FRAME
120
ORIENTING ASSEMBLY FRAME IN INSTALLATION ORIENTATION
130
POSITIONING 2:ND CONCRETE ELEMENT NEXT TO 1:ST CONCRETE ELEMENT SO THAT SUPPORT BRACKETS ARE CONFINED AT INTERSECTION
STOP

Fig. 4a

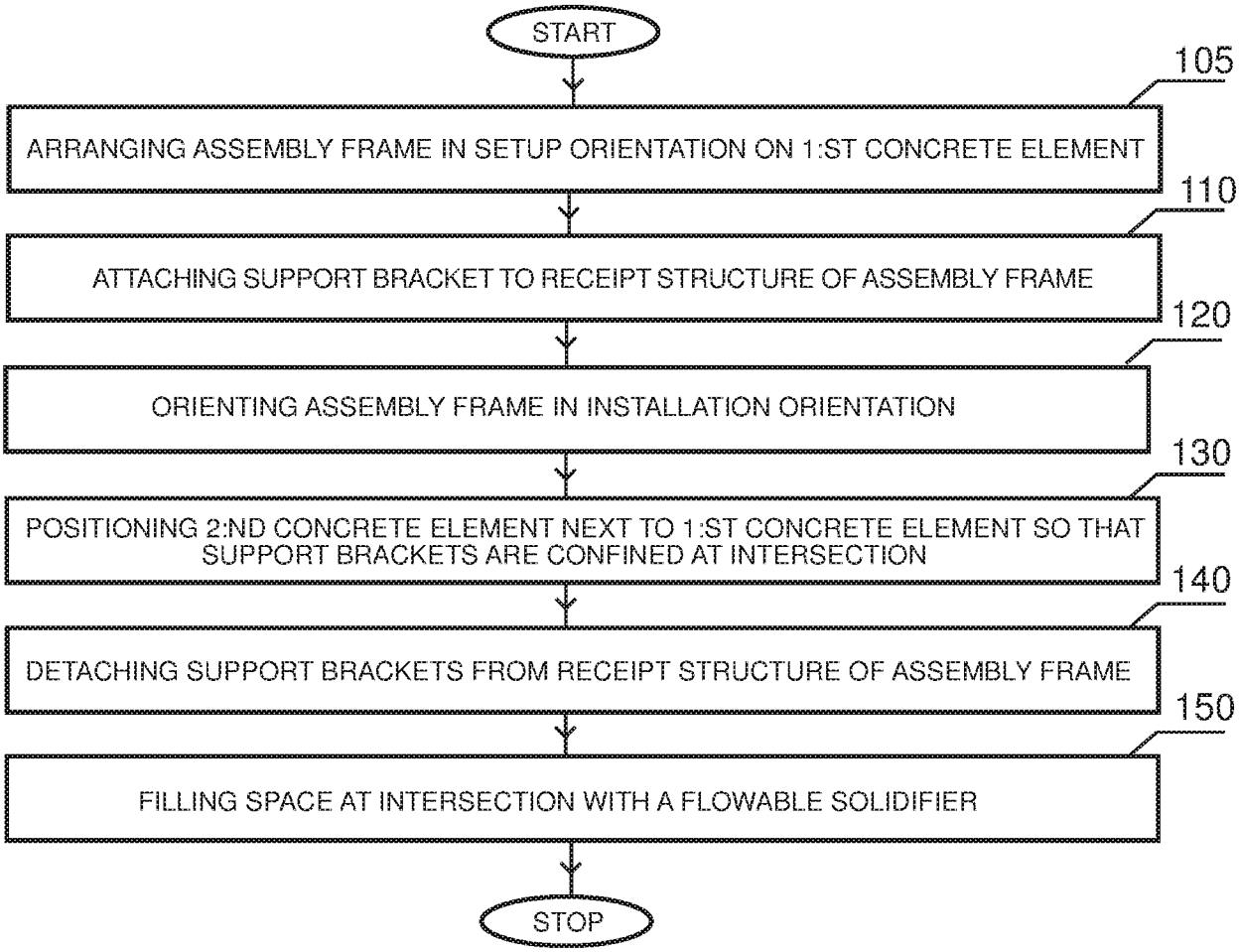
START
105
ARRANGING ASSEMBLY FRAME IN SETUP ORIENTATION ON 1:ST CONCRETE ELEMENT
110
ATTACHING SUPPORT BRACKET TO RECEIPT STRUCTURE OF ASSEMBLY FRAME
120
ORIENTING ASSEMBLY FRAME IN INSTALLATION ORIENTATION
130
POSITIONING 2:ND CONCRETE ELEMENT NEXT TO 1:ST CONCRETE ELEMENT SO THAT SUPPORT BRACKETS ARE CONFINED AT INTERSECTION
140
DETACHING SUPPORT BRACKETS FROM RECEIPT STRUCTURE OF ASSEMBLY FRAME
150
FILLING SPACE AT INTERSECTION WITH A FLOWABLE SOLIDIFIER
STOP

Fig. 4b

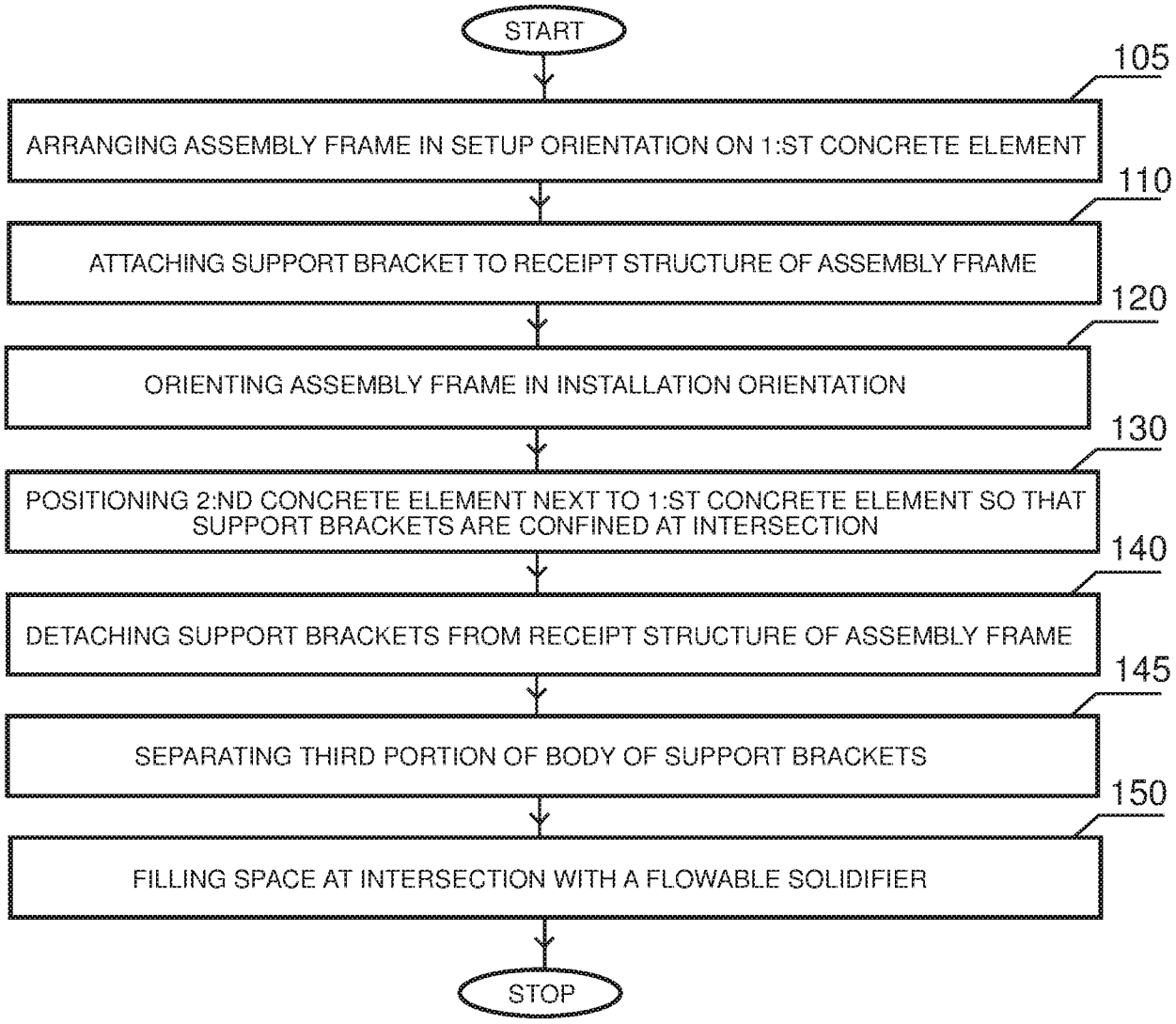
START
105
ARRANGING ASSEMBLY FRAME IN SETUP ORIENTATION ON 1:ST CONCRETE ELEMENT
110
ATTACHING SUPPORT BRACKET TO RECEIPT STRUCTURE OF ASSEMBLY FRAME
120
ORIENTING ASSEMBLY FRAME IN INSTALLATION ORIENTATION
130
POSITIONING 2:ND CONCRETE ELEMENT NEXT TO 1:ST CONCRETE ELEMENT SO THAT SUPPORT BRACKETS ARE CONFINED AT INTERSECTION
140
DETACHING SUPPORT BRACKETS FROM RECEIPT STRUCTURE OF ASSEMBLY FRAME
145
SEPARATING THIRD PORTION OF BODY OF SUPPORT BRACKETS
150
FILLING SPACE AT INTERSECTION WITH A FLOWABLE SOLIDIFIER
STOP

Fig. 4c

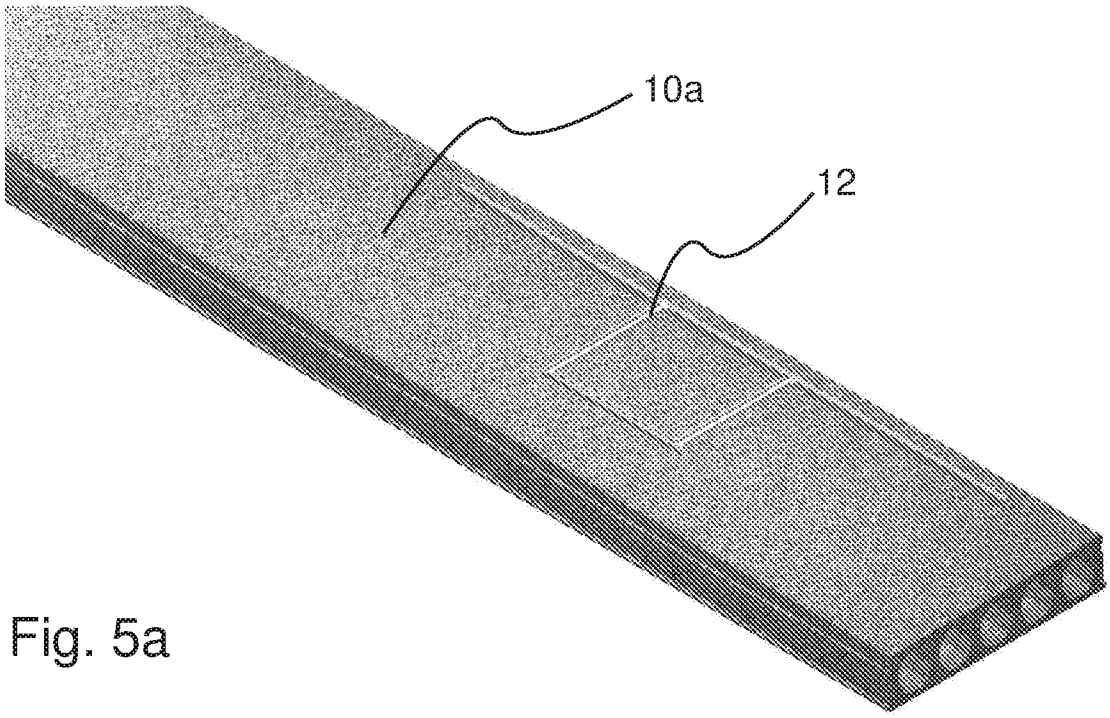

Fig. 5a

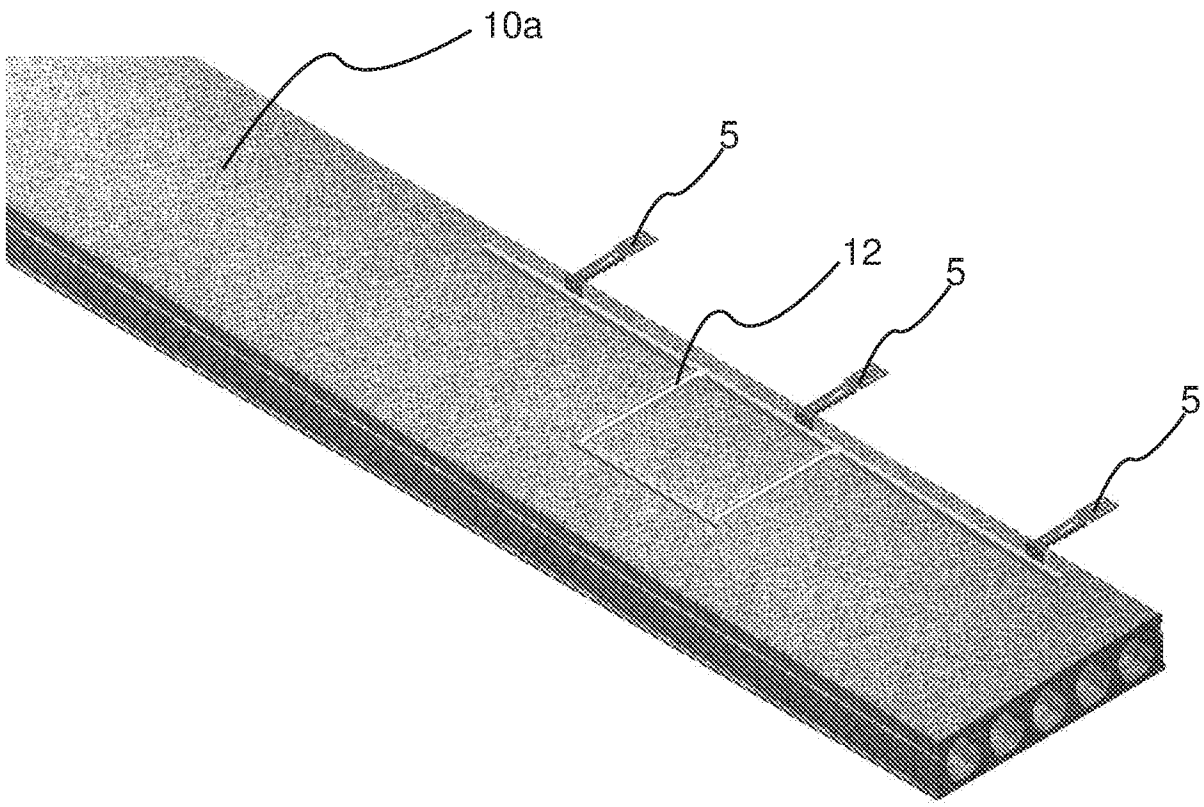

Fig. 5b

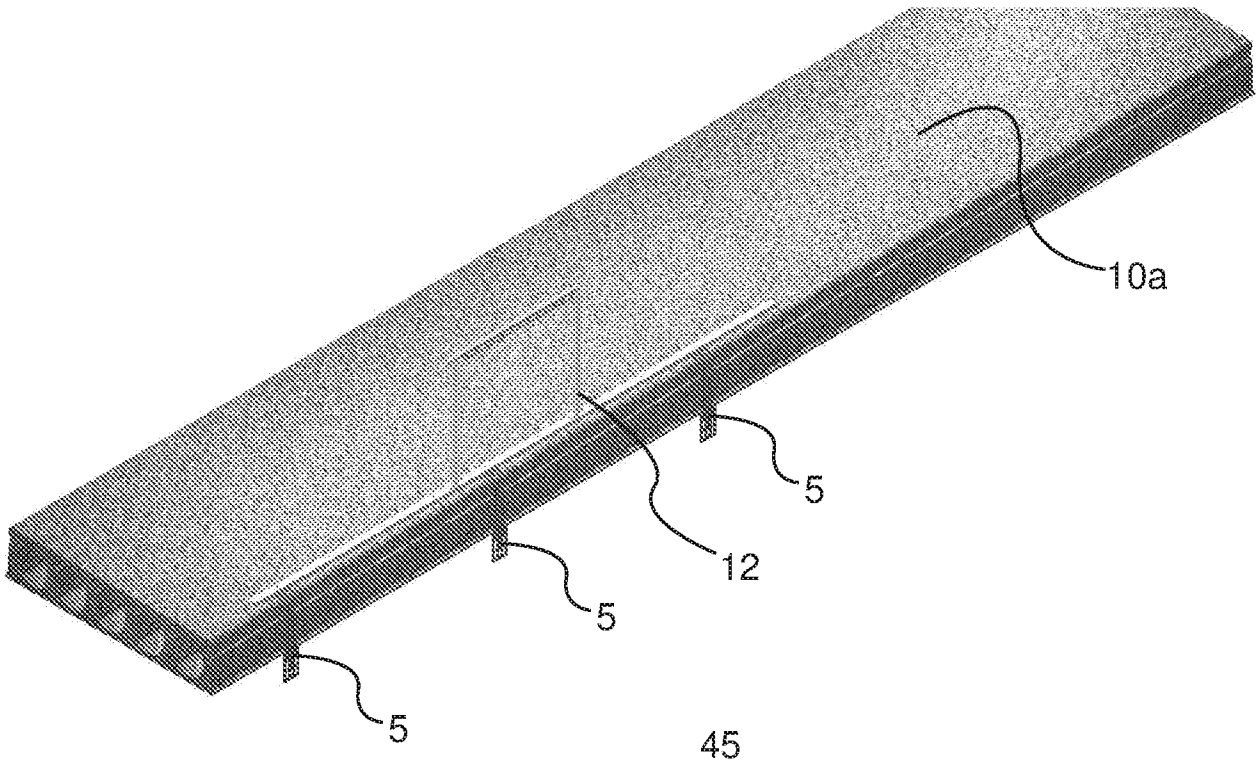

Fig. 5c

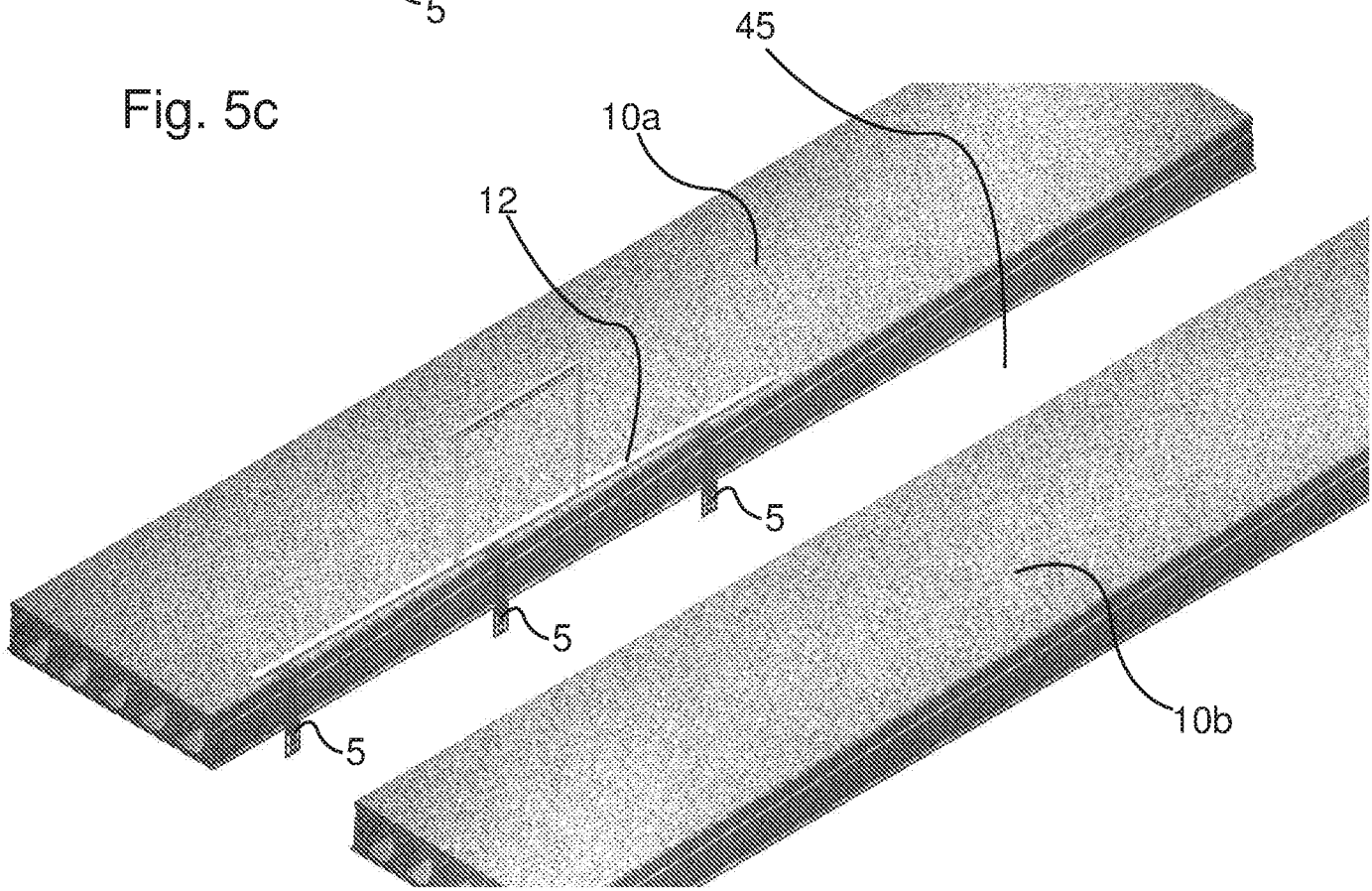

Fig. 5d

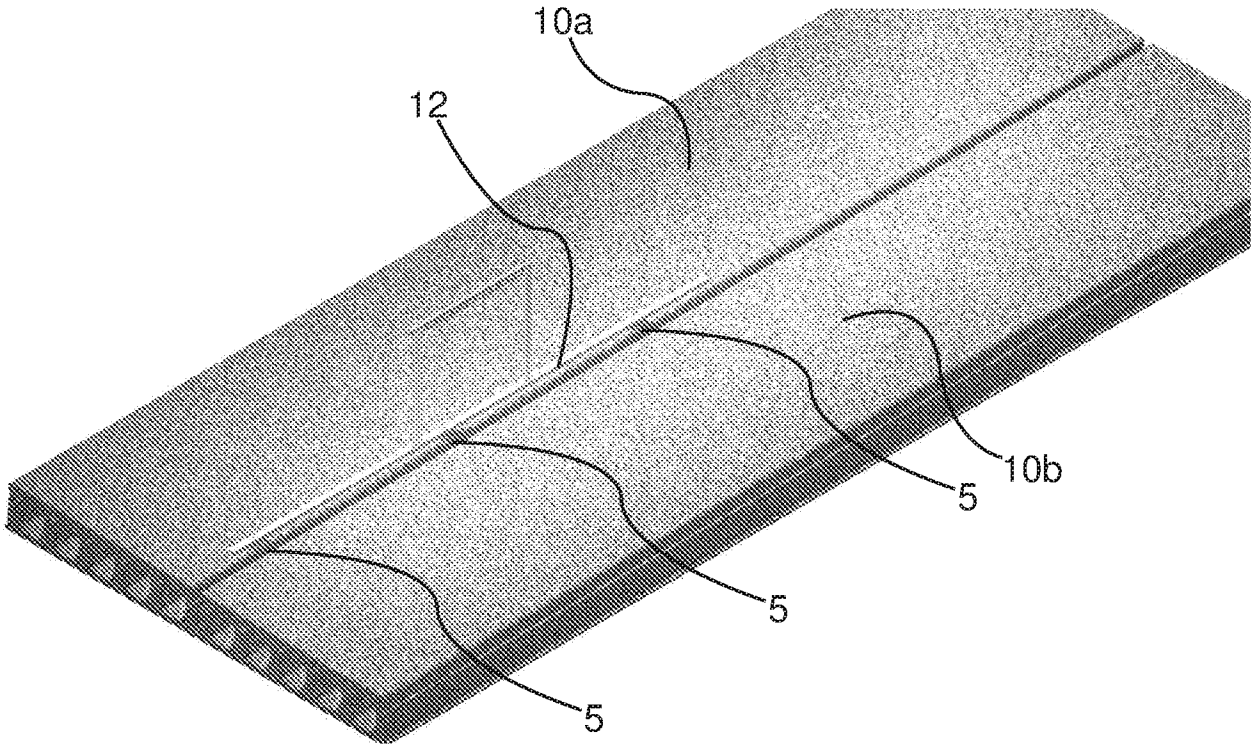

Fig. 5e

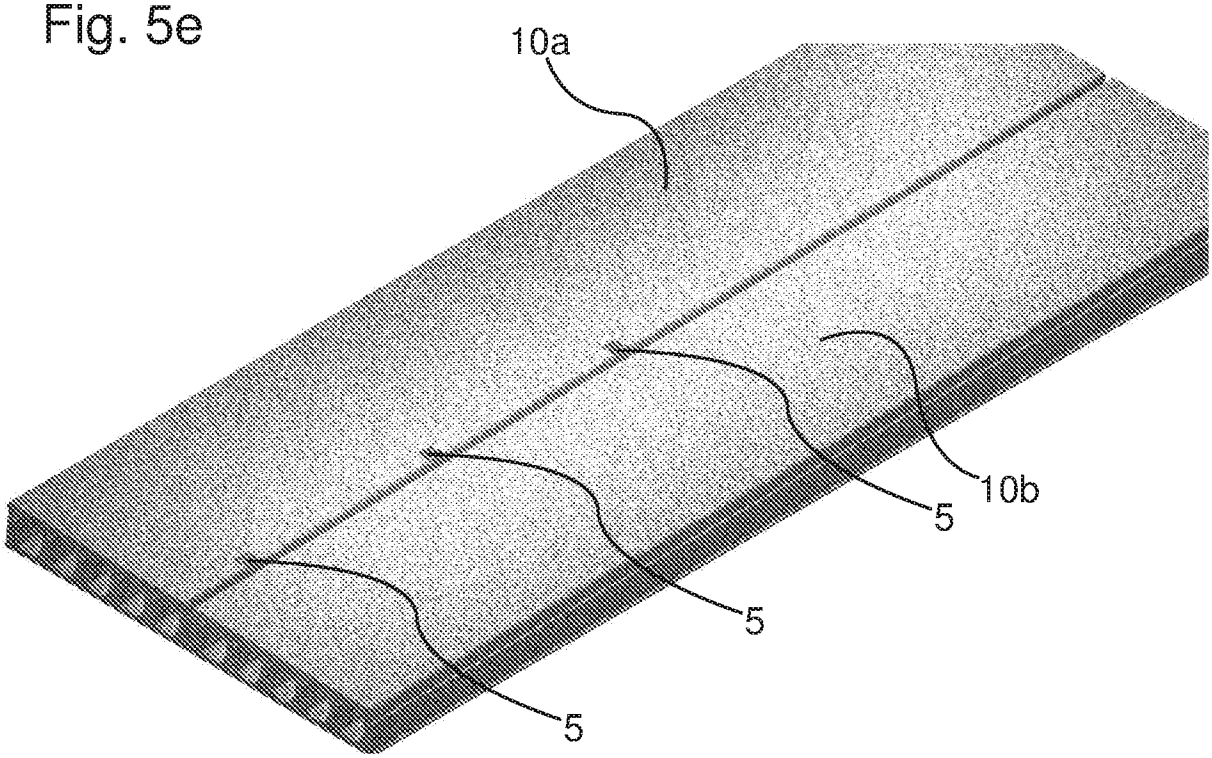

Fig. 5f

INTERNATIONAL SEARCH REPORT

International application No.

PCT/NO2018/050209

A. CLASSIFICATION OF SUBJECT MATTER

F16L 3/22 (2006.01), F16L 3/26 (2006.01)

According to International Patent Classification (IPC) or to both national classification and IPC

B. FIELDS SEARCHED

Minimum documentation searched (classification system followed by classification symbols)

F16L, E04, H02

Documentation searched other than minimum documentation to the extent that such documents are included in the fields searched

DK, NO, SE, FI: Classes as above.

Electronic data base consulted during the international search (name of data base and, where practicable, search terms used)

EPODOC, WPI, FULL TEXT: ENGLISH

C. DOCUMENTS CONSIDERED TO BE RELEVANT

Category*	Citation of document, with indication, where appropriate, of the relevant passages	Relevant to claim No.
A	US 2907198 A (NUNAMAKER HARLIN E, et al.) 1959.10.06 Whole document, in particular column 2, line 13 - column 3, line 16, column 4, lines 27-53, and the figures	1-34
A	US 1452515 A (KEARNEY JAMES R, et al.) 1923.04.24 Whole document, in particular page 1, lines 72-106, and the figures	1-34
A	US 1787038 A (GEOFFRAY HENRY G) 1930.12.30 Whole document	1-34
A	US 757863 A (EWART DAVID) 1904.04.19 Whole document	1-34
A	GB 2265764 A (OGLAEND SYSTEM AS) 1993.10.06 Whole document	1-34

☐ Further documents are listed in the continuation of Box C. ☒ See patent family annex.

* Special categories of cited documents:

"A" document defining the general state of the art which is not considered to be of particular relevance

"E" earlier application or patent but published on or after the international filing date

"L" document which may throw doubts on priority claim(s) or which is cited to establish the publication date of another citation or other special reason (as specified)

"O" document referring to an oral disclosure, use, exhibition or other means

"P" document published prior to the international filing date but later than the priority date claimed

"T" later document published after the international filing date or priority date and not in conflict with the application but cited to understand the principle or theory underlying the invention

"X" document of particular relevance; the claimed invention cannot be considered novel or cannot be considered to involve an inventive step when the document is taken alone

"Y" document of particular relevance; the claimed invention cannot be considered to involve an inventive step when the document is combined with one or more other such documents, such combination being obvious to a person skilled in the art

"&" document member of the same patent family

Date of the actual completion of the international search	Date of mailing of the international search report
29/10/2018	01/11/2018
Name and mailing address of the ISA Nordic Patent Institute Helgeshøj Allé 81 DK - 2630 Taastrup, Denmark. Facsimile No. + 45 43 50 80 08	Authorized officer Olav Bergheim Telephone No. +47 22 38 73 76

INTERNATIONAL SEARCH REPORT
Information on patent family members

International application No.
PCT/NO2018/050209

Patent document cited in search report / Publication date	Patent family member(s) / Publication date
US 2907198 A 1959.10.06	NONE
US 1452515 A 1923.04.24	NONE
US 1787038 A 1930.12.30	NONE
US 757863 A 1904.04.19	NONE
GB 2265764 A 1993.10.06	NO 921262 A 1993.10.04 FR 2689561 A1 1993.10.08 NL 9300511 A 1993.11.01