July 31, 1956 V. J. WARDEIN 2,756,694

BOXCAR AND ADAPTATIONS THEREFOR

Filed June 11, 1954 4 Sheets-Sheet 1

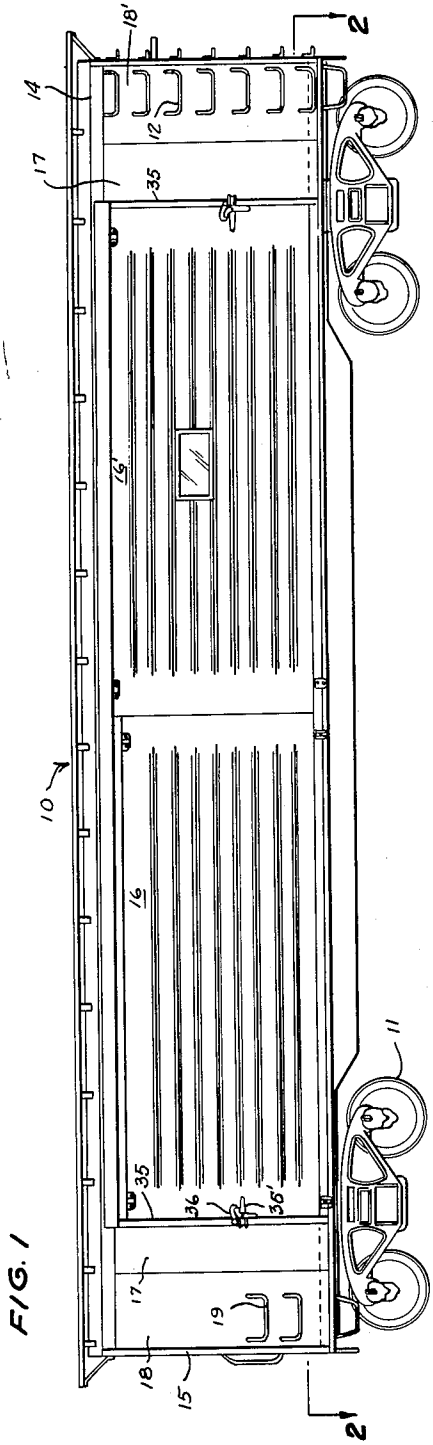

FIG. 1

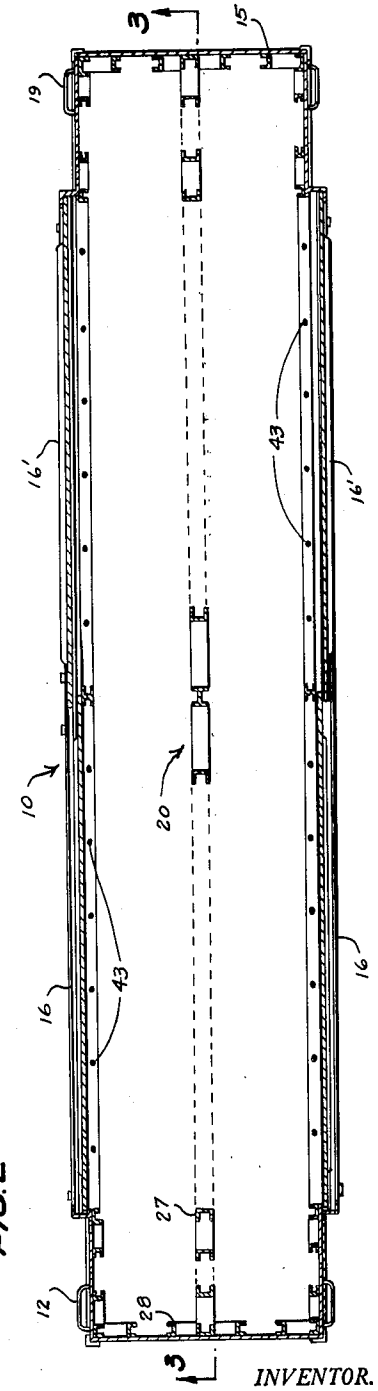

FIG. 2

INVENTOR.

VINCENT J. WARDEIN

BY

McMorrow, Berman & Davidson

ATTORNEYS

July 31, 1956 V. J. WARDEIN 2,756,694

BOXCAR AND ADAPTATIONS THEREFOR

Filed June 11, 1954 4 Sheets-Sheet 2

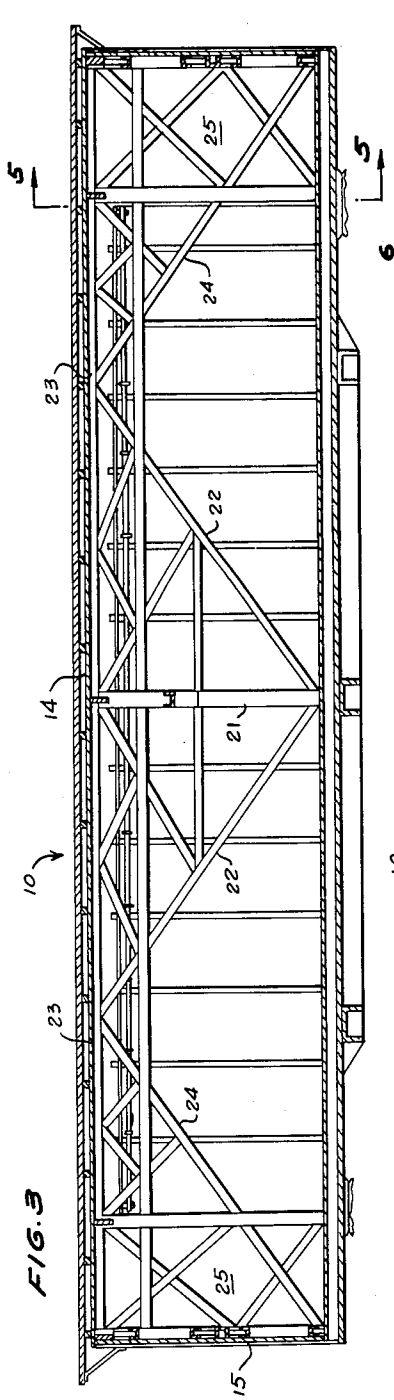

FIG. 3

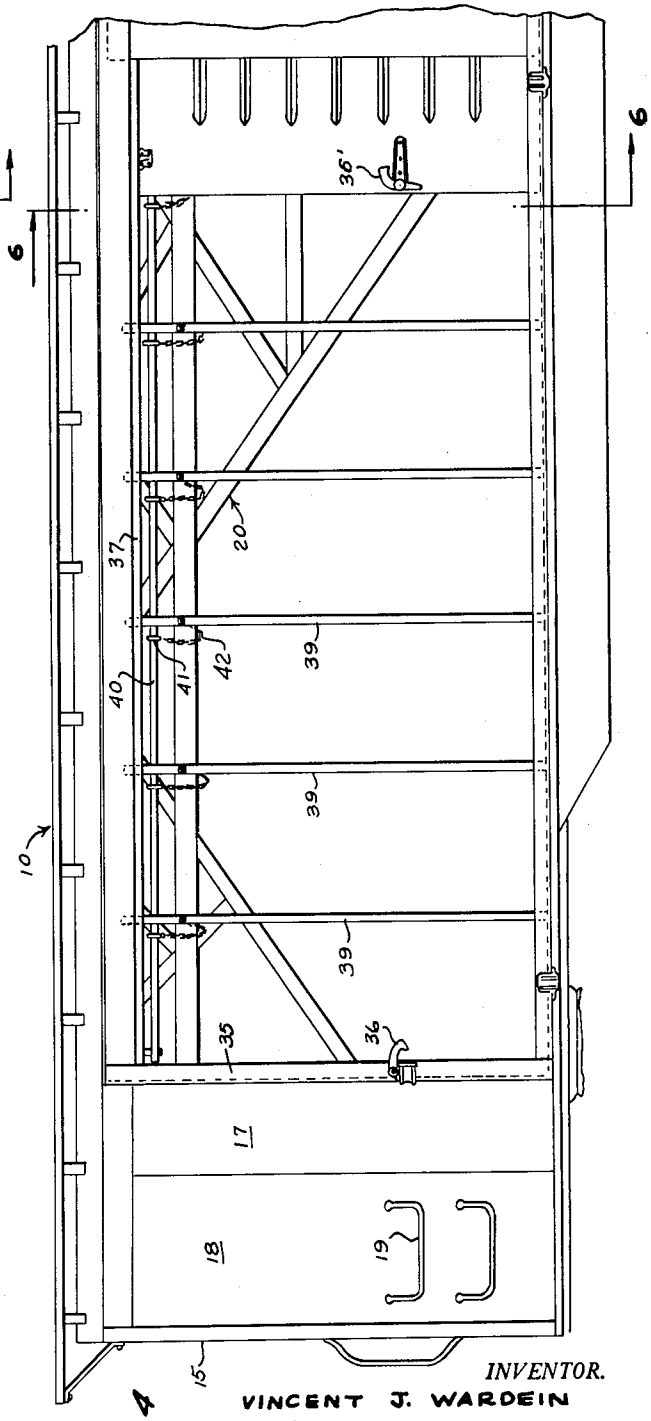

FIG. 4

INVENTOR.
VINCENT J. WARDEIN
BY
McMorrow, Berman & Davidson
ATTORNEYS

July 31, 1956 V. J. WARDEIN 2,756,694

BOXCAR AND ADAPTATIONS THEREFOR

Filed June 11, 1954 4 Sheets-Sheet 3

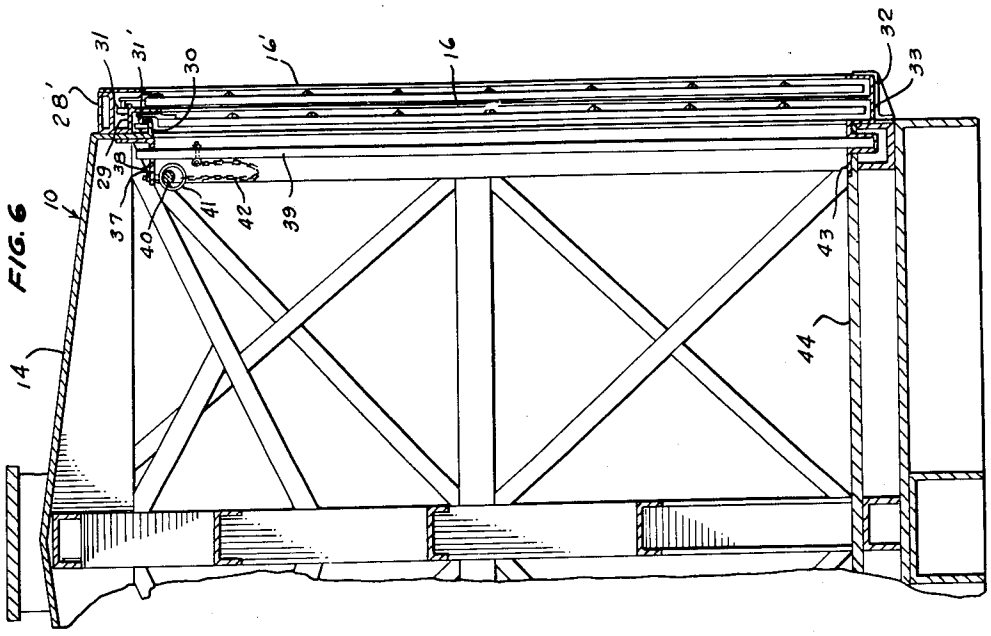

FIG. 6

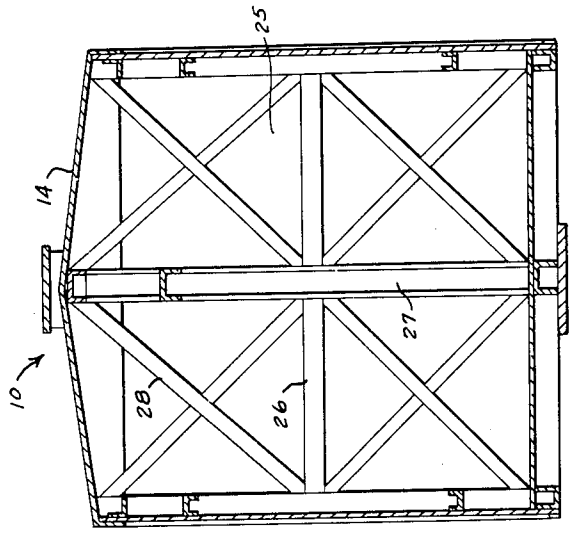

FIG. 5

INVENTOR.
VINCENT J. WARDEIN
BY
McMorrow, Berman + Davidson
ATTORNEYS

July 31, 1956 V. J. WARDEIN 2,756,694

BOXCAR AND ADAPTATIONS THEREFOR

Filed June 11, 1954 4 Sheets-Sheet 4

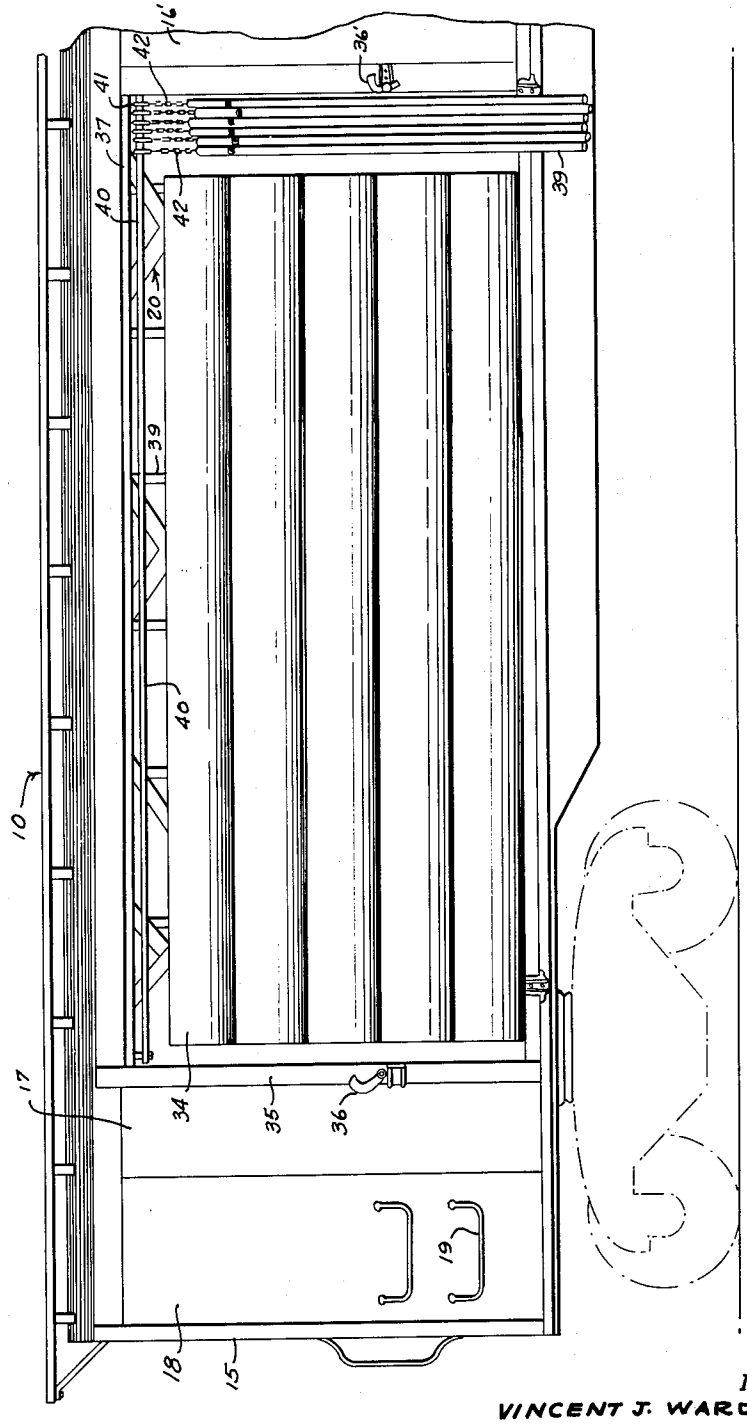

FIG. 7

INVENTOR.
VINCENT J. WARDEIN

BY

McMorrow, Berman + Davidson
ATTORNEYS

United States Patent Office 2,756,694 Patented July 31, 1956

2,756,694

BOXCAR AND ADAPTATIONS THEREFOR

Vincent Joseph Wardein, Alton, Ill.

Application June 11, 1954, Serial No. 435,988

3 Claims. (Cl. 105—378)

This invention relates to a box car and adaptations therefor with result that a standard box car may be altered in minor degree and adapted to receive therein loads occupying its loading space to the greatest efficiency while being adapted to receive such loads when delivered from ground level approach as can be made by conventional fork-lift equipment.

Box cars do not now have doors which extend for substantially the longitudinal length of the loading space but rather such doors only extend longitudinally over part of the loading space length with the consequence that loads of substantial length, such as pipes, beams, lumber, and the like, if loaded in a standard box car often leave substantial space unoccupied as the longitudinal opening in standard doors will only admit load lengths which at best may be inserted diagonally into the car within the limits of such conventional door length and the width of the car.

As a primary object this invention sets out to adapt conventional box cars to receive therein unitary load items which may extend for slightly less than half the length of the car and which may be handled in a manner to be loaded without consideration of the width of the car, while at the same time any excess space at the ends of the load may be occupied by loads of lesser strength and by accessory loads.

It is also an object of this invention to provide an improved box car of the class hereinabove described which is adapted to protect the doors thereof from any transverse outwardly shifting of loads.

It is a further object of this invention to provide such a box car which may receive loads therein from either side in a manner that the long loads placed in the main loading space on one side may be longer than the long loads placed therein from the other side while the end spaces longitudinally outwardly of such long loads may be effectively loaded.

Other and further objects will be apparent when the description and claims hereinbelow are considered in connection with the drawings in which:

Figure 1 is a longitudinal elevation of a box car depicting an embodiment of the invention;

Figure 2 is a plan view taken along line 2—2 of Figure 1;

Figure 3 is a sectional elevation taken along line 3—3 of Figure 2;

Figure 4 is an enlarged sectional elevation of part of the box car shown in Figure 1;

Figure 5 is a transverse sectional elevation taken along line 5—5 of Figure 3;

Figure 6 is an enlarged transverse sectional elevation taken along line 6—6 of Figure 4; and

Figure 7 is a partial sectional elevation showing half of a box car with a load on one side which extends for substantially half the length of the main loading space.

Referring in detail to the drawings a box car 10 is shown having conventional traction wheels 11, ladder 12, top 14, and transverse ends 15. Doors 16 and 16' are shown which extend from the transverse central plane of the car over the greater part of the distance to the ends 15. Box car side wall members 17, defining the ends of the loading and unloading opening of the box car, are also shown longitudinally outwardly of the doors 16 and 16' and outwardly of such members 17 are shown side wall panels 18, 18' with mounting rungs 19 on the panels 18 and 18'.

Extending longitudinally down the center line of the car a bracing and separating structure 20 is shown in Figures 2 and 3. Such structure includes a center upright member 21 and a diagonally upwardly extending cross-bracing truss structure 22 toed at the base of the upright 21 and top-connected at 23 to the car top structure. From the point 23 a similar cross-bracing truss structure 24 extends to the inner bases of the car ends 15. Thus the truss structures 22 and 24 form separation or division elements especially at the upper levels of the car.

End cargo loading compartments 25 are provided for accessory loading to receive small items. This compartmentation may be effected, as shown in Figure 5, by dividing the car ends from the main cargo space as by beams 26 extending from an upright 27, with cross-bracing elements 28 being provided below and above the beams. This structure serves the additional purpose of bracing the central load against longitudinal shifts endwardly.

As shown in general in Figure 1 each door 16, 16' extends endwardly from the center of the car and in order to load the space inwardly of a door 16', it is necessary that such doors 16, 16' slide one outwardly of the other. To this end, as shown most clearly in Figure 6, the track enclosure 28' is provided on each side outwardly of the main hull structure of the car and such enclosure has therein the horizontally disposed tracks 29 and 30 near the top thereof with the track 29 being positioned above the track 30 and extending farther outwardly than such track 30 therebelow. Thus door 16' may be supported by rollers 31 rolling upon track 29 in a manner to slide without conflict outwardly of door 16 which is supported by rollers 31' which roll upon track 30. Bottom guide slots 32, 33 provided for the doors 16' and 16 respectively, serve in maintaining the doors in substantial vertical parallelism. By this construction the doors may be rolled into coincidence so that half of the longitudinal length of the main loading space is accessible for the insertion of lengthy loads.

Handling equipment as now provided includes a number of devices adapted to support loads with longitudinal axes substantially parallel to the sides of box cars and to move such loads in and lift them by conventional fork-lift equipment to a loadable elevation with relation to the floor of a box car. As best shown in Figure 7 such a load 34 has been moved in and loaded while inner car door 16 has been rolled back full length and is fully covered by a car door 16', and thus is not visible in this figure.

A post 35 adjacent the side wall member 17 has thereon a latching means 36 to co-operate with the latching means 36' on the ends of the doors 16, 16' to latch these doors in closed position.

In cases when it may be practicable to load lengthy articles into cars with axis extending substantially horizontally but at an angle to the longitudinal center line of a box car the main load can be loaded at a diagonal limit and permitted by the center bracing and partition structure of the car to extend substantially longer than the length of one door. When such a major load has been loaded the doors 16, 16' may be rolled back in parallelism to the formerly open sided and now loaded end of the car and space will thus be left for easy and

full loading of the remaining space which is less than the length of a single door.

As is inherent in railroad transportation, as when curves are traversed, loads permitted lateral movement will shift, and in the types of cars with doors of the length disclosed in this invention such outwardly lateral shifting of a load could easily cause the load to break out sidewardly through a long door which is not structurally positionable for extra bracing. To avoid this occurrence, a fence assembly is provided and includes an angle 37 mounted inside the car on each side and spaced below the top 14 and provided with longitudinally spaced apart holes 38 in its horizontal flange. A plurality of upstanding bars 39 are intended to have their upper ends inserted through the holes 38. Extending parallel to the angle 37 a rod or rail 40 is provided and connected thereto at each end of the angle. Rings 41 are provided to slide upon such rod or rail 40 and a chain 42 connects each ring 41 to a bar 39. The box car is provided with the usual floor 44. Sockets 43 are provided below the holes 38 in the floor 44 of the car and the upper ends of the bars 39 are first inserted through the holes 38 and then the lower ends are lowered into the sockets 43. Thus, as shown in Figure 4, after the load has been loaded the bars 39 may be placed in position to prevent the load from shifting outwardly to injure or rupture the doors 16 and 16', as can best be observed from a consideration of Figure 6.

It can easily be seen from a consideration of Figure 7 that during loading and unloading the bars 39 may be removed from obstructing the sideward loading space simply by lifting each rod upwardly to extend through its hole 38 toward the car top 14 to free the lower end of the bar from its socket 43, then since the hole 38 is of greater diameter than the bar 39 the bar 39 may be shifted laterally to permit its upper end to be lowered downwardly through hole 38 after which the bars may be moved along the rail 40 toward an end of the car to such a distance as will leave free the desired sideward loading space.

With regard to the fence assembly for bridging the loading and unloading opening in the box car, it will be seen that the fence assembly will, in essence, comprise the rail 40 which is adapted to be fixedly positioned longitudinally of and in overhead relation with respect to the car opening, the plurality of upstanding bars 39 which are arranged in side-by-side abutting relation and positioned below and adjacent one end of the rail with their upper ends flexibly connected by means of the chains 42 to the rail 40 for sliding movement therealong, the angle member 37 which has one leg thereof defining a ledge extending inwardly having a row of longitudinally spaced openings transversely therethrough to define means arranged in fixed relation along and adjacent the rail 40 for receiving the upper ends of the bars 39 when the latter are moved to spaced positions along the rail, and the sockets 43 which are arranged in a longitudinal row in spaced relation to each other and in alignment with the openings in the ledge of the angle member 37 and which define means arranged in fixed relation below and in alignment with the first mentioned means to receive the lower ends of the bars 39 when they are moved to the spaced positions along the rail 40.

Although a single embodiment of this invention has been shown and described, it is pointed out that various modifications and alterations should fall within the broad spirit thereof, such as a car not having the end compartments 25 and cars otherwise not longitudinally centrally divided, along with many other variations and modifications. Broadly this invention states its inclusion of these and many other modifications and variations as may fall within its scope as herein asserted, and within the scope claimed and merited for the appended claims.

What is claimed is:

1. A fence assembly for bridging the loading and unloading opening in a box car, said fence assembly comprising a rail fixedly carried by the box car and positioned in bridging relation to the car opening and in overhead relation with respect to the car opening, a plurality of upstanding bars arranged in side-by-side abutting relation positioned below and adjacent one end of said rail and having their upper ends connected to said rail for sliding movement therealong, means arranged in fixed relation along and adjacent said rail to receive the upper ends of the bars when the latter are moved to spaced positions along said rail, and other means arranged in fixed relation below and in alignment with said first-mentioned means to also receive the lower ends of the bars when moved to said spaced positions along said rail.

2. A fence assembly for bridging the loading and unloading opening in a box car, said fence assembly comprising a rail fixedly carried by the box car and positioned in bridging relation to the car opening and in overhead relation with respect to the car opening, a plurality of upstanding bars arranged in side-by-side abutting relation positioned below and adjacent one end of said rail, a chain extending between the upper end of each of said bars and said rail to define a flexible connection therebetween and arranged for sliding movement along said rail, means arranged in fixed relation along and adjacent said rail to receive the upper ends of the bars when the latter are moved to spaced positions along said rail, and other means arranged in fixed relation below and in alignment with said first-mentioned means to also receive the lower ends of the bars when moved to said spaced positions along said rail.

3. A fence assembly for bridging the loading and unloading opening in a box car, said fence assembly comprising a rail fixedly carried by the box car and positioned in bridging relation to the car opening and in overhead relation with respect to the car opening, a plurality of upstanding bars arranged in side-by-side abutting relation positioned below and adjacent one end of said rail, a chain extending between the upper end of each of said bars and said rail to define a flexible connection therebetween and arranged for sliding movement along said rail, means arranged in fixed relation along and adjacent said rail to receive the upper ends of the bars when the latter are moved to spaced positions along said rail, and other means arranged in fixed relation below and in alignment with said first-mentioned means to also receive the lower ends of the bars when moved to said spaced positions along said rail, said first-mentioned means comprising a ledge fixedly carried by the box car and extending inwardly thereof above and parallel to said rail and said ledge having a row of spaced openings transversely therethrough in which the upper ends of the bars are received, said other means including a row of spaced sockets in and opening through the top of the box car floor, with a socket in vertical alignment with a respective one of said openings and in which is received the lower end of a bar whose upper end is received in said respective one of said openings.

References Cited in the file of this patent

UNITED STATES PATENTS

1,607,511	Brady	Nov. 16, 1926
1,610,772	Gregg	Dec. 14, 1926
1,634,779	Gregg	July 5, 1927
1,674,752	Wasberg et al.	June 26, 1928
2,169,677	Burrell	Aug. 15, 1939
2,177,076	Pierce	Oct. 24, 1939
2,287,852	Zyara	June 30, 1942
2,497,683	Nampa et al.	Feb. 14, 1950
2,509,966	Cox	May 30, 1950
2,617,369	Udstad	Nov. 11, 1952