July 16, 1929. T. E. D. CRUMPTON 1,721,107

CEMENT SHOE FOR OIL WELLS

Filed May 28, 1928

Fig. 1.

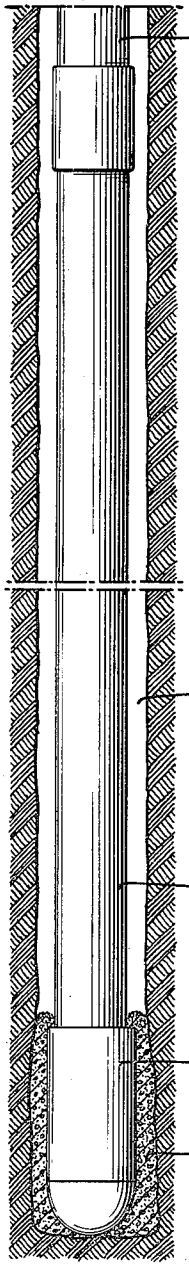

Fig. 2.

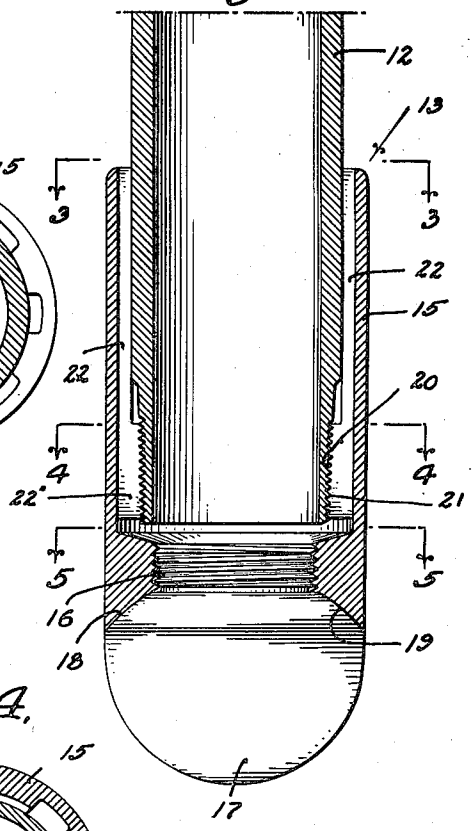

Fig. 3.

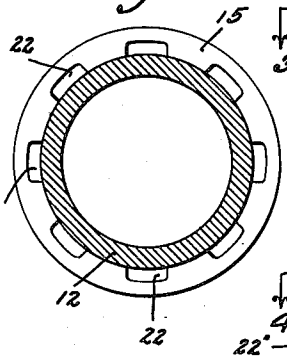

Fig. 4.

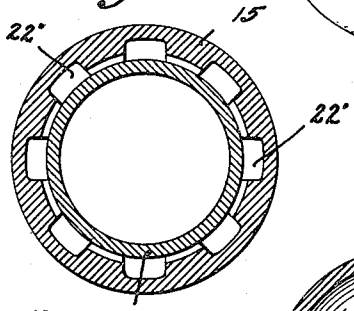

Fig. 5.

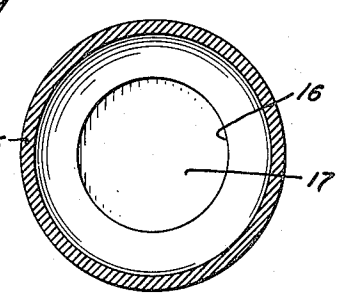

Fig. 6.

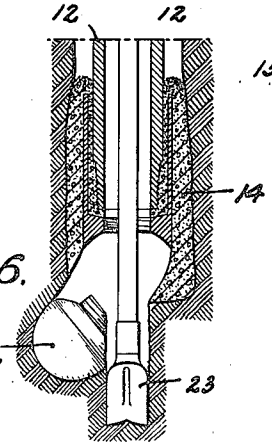

INVENTOR

By THOMAS E. D. CRUMPTON

ATTORNEY

Patented July 16, 1929. 1,721,107

UNITED STATES PATENT OFFICE.

THOMAS E. D. CRUMPTON, OF SAN GABRIEL, CALIFORNIA.

CEMENT SHOE FOR OIL WELLS.

Application filed May 28, 1928. Serial No. 281,038.

It is well known to those familiar with the art to which this invention relates, that it is necessary during the drilling of an oil well to "cement off" the oil sand from the casing at various points in the well. These "cementing off" points are ordinarily governed by the structure of the formation in which the well is being drilled and in most cases the well is "cemented" in gas or water zones, or at the points at which the well is "cased in", the lower end of the casing being embedded in cement.

It will of course be understood, that in the drilling of an oil well, the initial diameter of the well is generally much greater than the diameter of the well at the bottom and in ordinary practice, the well is "spudded in" with the largest diameter bit which the rigging will handle, this bit being advanced to a point in the well at which the torsion in the drill string, due to such a diameter bit, becomes excessive. At this point, in the event this section of the well terminates in a relatively soft or water or gas bearing formation, the lower end of the string of casing which is lowered therein is embedded in a block of cement or concrete, which block of cement is permitted to set before advancing with the drilling operation.

The mentioned drilling operation is carried through the block of concrete with a smaller bit and when the desired depth of hole having a diameter of the bit has been reached, a second and progressively smaller string of casing is placed in the resulting bore hole, the second casing being in turn embedded in a second cement block.

Various methods have been used for placing the cement at the bottom of the hole in the event of a dry hole, that is, one which is drilled without the use of circulating fluid and in which no liquid has entered the hole from the formation, the cement is simply poured therein and the casing is lowered into the wet or soft cement. It will be understood, however, that in the use of a rotary drilling equipment, the bore hole is always filled with rotary mud and it is necessary to employ some means whereby the cement may be placed at the lower end of the casing without undue contamination from the mud.

It is common practice in this case to lower the casing to the desired position and by means of wooden blocks or through the use of variously constructed cement shoes placed on the lower end of the casing, to pump the cement to and about the end of the casing and to hold the same at such point by the pressure upon the mud contained within the casing.

This invention relates more particularly to the last mentioned method and comprises a cement shoe which is designed to distribute the cement evenly about the periphery of the casing and which is so constructed as to facilitate the advance of the bit in the progress of the following section of the bore hole.

It will be understood that in the use of shoes as ordinarily constructed, these shoes frequently rest with one surface embedded in the side of the bottom of the bore hole and when in such position, all of the cement is forced from the opposite side of the shoe, making a very unsatisfactory seat for the casing and often resulting in leaks which may eventually mean the loss of the well.

Aside from the primary object of developing a shoe in which the cement may be uniformly distributed about the periphery of the lower end of the casing, regardless of the manner in which it rests upon the bottom of the well, it is a further object of this invention to develop a shoe having the smallest possible outside diameter relative to the diameter of the casing upon which the shoe is used.

This last mentioned feature permits the use of the maximum size casing in the bore hole, which is of obvious importance in the drilling of deep wells.

The general construction of this invention embodies a sleeve, the lower end of which is provided with a throat threaded to receive the lower end of the casing. Spaced below this throat is a second or bottom throat which receives a closure plug, the plug being adapted to direct the cement, which has been advanced downwardly through the casing, upwardly about the periphery of the casing through a plurality of suitably prepared channels or passages from which it is distributed through the upper end of the sleeve in a uniform manner about the casing.

It will be understood that after the cement has been so distributed and permitted to set, that the shoe is firmly embedded therein and it is necessary to break or otherwise remove the mentioned plug before the advance of a second bit can be made. In order to facilitate such an advance of a second drill member, the plug is preferably so threaded that

the engagement therewith and the rotation thereon of the mentioned bit will effect the unscrewing of the plug, forcing the same down and out of the path of the bit.

Other objects and advantageous structural features of the invention will be better understood from the following description of an illustrative embodiment thereof as shown in the accompanying drawings, in which

Fig. 1 represents an elevational section of the lower end of the bore hole having a string of casing and a cement shoe suspended therein.

Fig. 2 is an enlarged elevational section illustrating the cement shoe shown in Fig. 1.

Fig. 3 is a plan section taken in a plane represented by the line 3—3 of Fig. 2.

Fig. 4 is a plan section taken in a plane represented by the line 4—4 in Fig. 2.

Fig. 5 is a plan section taken in a plane represented by the line 5—5 of Fig. 2.

Fig. 6 is a sectional view similar to the lower part of Fig. 1, but showing a drill bit as having been advanced through the cement block into the formation therebelow.

More particularly describing the invention as herein illustrated, reference numeral 11 indicates the lower end of a bore hole within which a casing 12 is suspended, the lower end of the casing being provided with a cement shoe 13, the cement shoe being illustrated as embedded in a block of cement 14.

The cement shoe 13 is best illustrated in Fig. 2, as embodying a sleeve member 15, the lower end of which is internally provided with a bottom throat 16, said throat being threaded to receive a closure plug 17, the closure plug 17 being upwardly provided with a beveled surface 18, which engages a correspondingly beveled surface 19 on the lower face of the throat 16.

Formed within the sleeve 13 and spaced upwardly from the bottom throat 16, is a second or upper throat 20, which in turn is threaded to receive the lower threaded end 21 of the casing 12, and it will be understood that the cooperative threads upon the casing and the throat, are tapered or otherwise so arranged as to prevent a downwardly advance of the casing to a point at which the bottom of the mentioned casing might engage the top of the throat 16.

The inner surface of the sleeve 15 and the upper throat 20, are provided with a plurality of passages comprising the channels which are best illustrated in Figs. 3 and 4, and are indicated by reference numerals 22 and 22′ respectively.

It will be understood that the cement which is pumped downwardly through casing 12, will advance between the lower end of the casing and the upper surface of the bottom throat into and through the channels 22′ and 22 respectively, from which it will be uniformly distributed about the periphery of the casing, such distribution being effective to form a block of cement about the shoe as illustrated in Fig. 1.

In order that a casing of maximum diameter may be used within the bore hole as previously mentioned, the closure plug 17 is preferably made of a diameter substantially equal to the diameter of the sleeve, and it will be understood that the combined area of the channels 22 and 22′ in the sleeve is governed largely by the capacity of the pump which is used at the ground surface to deliver the cement to the well. This is, however, a feature in structural design and needs no further mention.

Fig. 5 illustrates the manner in which the closure plug 17 is designed to be forced from the sleeve throat 19 into the formation by means of a drill bit 23. It will be understood of course that the plug is preferably made of a material which may be easily broken or penetrated by the bit, in the event it is not disengaged as shown.

It will be understood that while I have herein described a single embodiment of my invention, that the invention is not necessarily limited to the specific construction illustrated, but includes within its scope, such changes as might fairly come within the spirit of the appended claims.

I claim as my invention:

1. A cement shoe embodying: a sleeve member adapted to be mounted on the lower end of a well casing; a closure plug in external engagement with the inner surface of the lower end of said sleeve, said sleeve being provided internally with outlet passages between the lower end of said casing and the upper end of said sleeve.

2. A cement shoe embodying: a sleeve member adapted to be mounted on the lower end of a well casing: a closure plug in external engagement with the inner surface of the lower end of said sleeve, said sleeve being provided internally with outlet passages between the lower end of said casing and the upper end of said sleeve, and said closure plug having an outside diameter substantially equal to the outside diameter of said sleeve.

3. A cement shoe embodying: a sleeve having a bottom throat formed in the lower end thereof, adapted to receive a closure plug, and having an upper throat spaced above said bottom throat and adapted to receive the lower end of a well casing; a closure plug in said bottom throat; and a well casing in said upper throat, said upper throat and said sleeve being provided with outlet means, to permit the egress of fluid from the lower end of said casing to the upper end of said sleeve.

4. A cement shoe embodying: a sleeve having a bottom throat formed in the lower end thereof, adapted to receive a closure plug, and having an upper throat spaced above said

bottom throat and adapted to receive the lower end of a well casing; a closure plug in said bottom throat; and a well casing in said upper throat, said upper throat and said sleeve being provided with a plurality of passages, to permit the egress of fluid from the lower end of said casing to the upper end of said sleeve.

5. A cement shoe embodying: a sleeve having a bottom throat formed in the lower end thereof, adapted to receive a closure plug, and having an upper throat spaced above said bottom throat and adapted to receive the lower end of a well casing; a closure plug in said bottom throat; and a well casing in said upper throat, said upper throat and said sleeve being provided with outlet means to permit the egress of fluid from the lower end of said casing to the upper end of said sleeve, said upper throat and the lower end of said casing being provided with cooperative threads adapted to hold said casing in a spaced relation with said bottom throat.

6. A cement shoe embodying: a sleeve having a bottom throat formed in the lower end thereof, adapted to receive a closure plug, and having an upper throat spaced above said bottom throat and adapted to receive the lower end of a well casing; a closure plug having an outside diameter of said sleeve, mounted in said bottom throat; and a well casing in said upper throat, said upper throat and said sleeve being provided with outlet means, to permit the egress of fluid from the lower end of said casing to the upper end of said sleeve.

In testimony whereof, I have hereunto set my hand at Los Angeles, California, this 18th day of May, 1928.

THOMAS E. D. CRUMPTON.