Jan. 20, 1942. J. POLNEY 2,270,602

BURNER

Filed Sept. 27, 1939

Fig. 1.

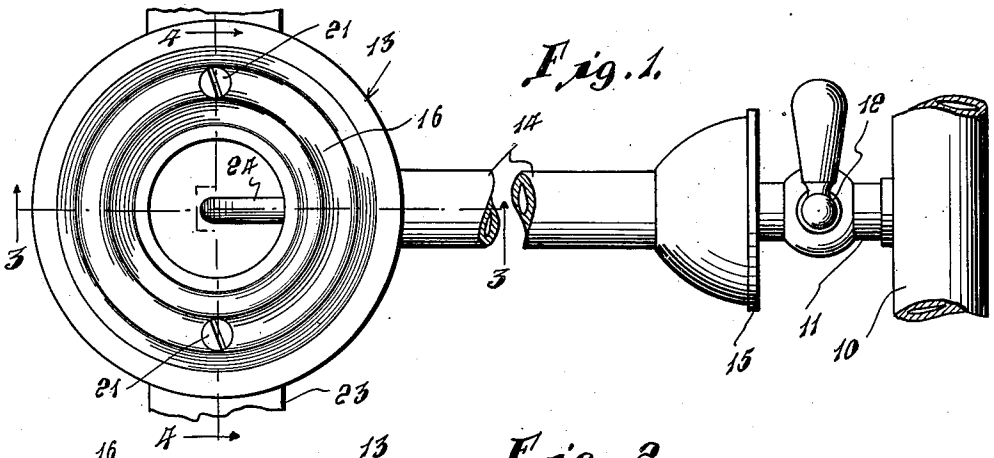

Fig. 2.

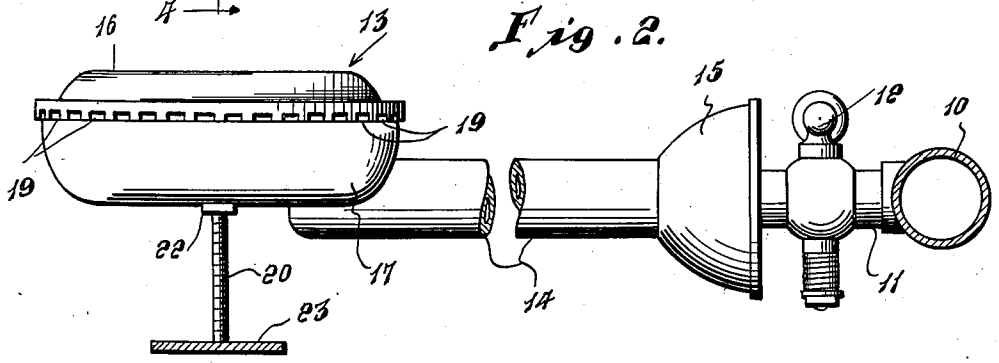

Fig. 3.

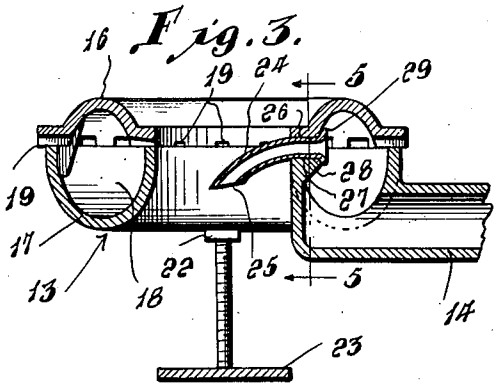

Fig. 4.

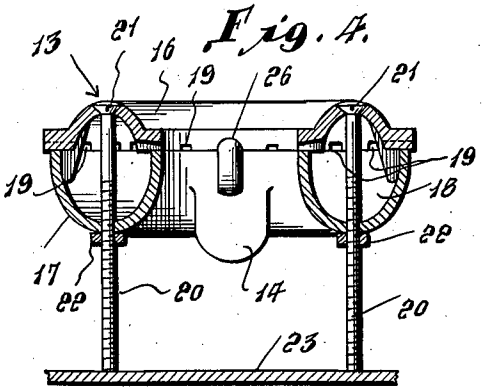

Fig. 5

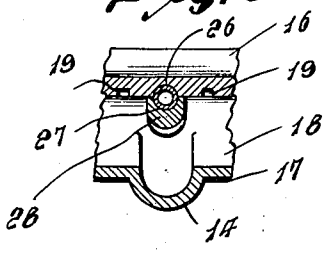

Inventor

John Polney

By Bryant & Lowry

Attorneys.

Patented Jan. 20, 1942

2,270,602

UNITED STATES PATENT OFFICE

2,270,602

BURNER

John Polney, Elizabeth, N. J.

Application September 27, 1939, Serial No. 296,854

1 Claim. (Cl. 158—116)

This invention relates to certain new and useful improvements in burners.

The primary object of the invention is to provide a burner of the type employed with gas ranges or gas cooking stoves, wherein the burner head has concentric rings of burner openings with an auxiliary burner tube carried by the head and having the burner nozzle portion thereof disposed concentrically of the burner for the intensification of heat and promotion of combustion.

A further object of the invention is to provide a burner of the foregoing character wherein the burner head comprises upper and lower sections maintained in assembled relation by screw bolts with the screw bolts of a length to extend a considerable distance below the burner head for engagement with a bracket or the like to provide a support for the burner head, a standard length of screw bolt being employed so that parts may be cut therefrom to effect the level mounting of the burner head and the usual pipe section carried thereby within a gas range.

With the above and other objects in view that will become apparent as the nature of the invention is better understood, the same consists in the novel form, combination and arrangement of parts hereinafter more fully described, shown in the accompanying drawing and claimed.

In the drawing:

Figure 1 is a top plan view, partly broken away of a gas stove burner constructed in accordance with the present invention and showing an auxiliary burner pipe arranged centrally of the opening in the burner head;

Figure 2 is a side elevational view, partly broken away and shown in section and illustrating the screw bolts connecting the top and bottom sections of the burner head that constitute supports for the burner;

Figure 3 is a vertical longitudinal sectional view taken on line 3—3 of Figure 1, showing the auxiliary burner pipe clamped between the top and bottom sections of the burner head;

Figure 4 is a vertical cross-sectional view taken on line 4—4 of Figure 1, showing the heads of the screws connecting the top and bottom sections of the burner head counter-sunk in the top section; and

Figure 5 is a vertical detail sectional view taken on line 5—5 of Figure 3.

Referring more in detail to the accompanying drawing and particularly to Figures 1 and 2, the reference character 10 designates the usual cross front gas pipe of a gas range having a branch pipe 11 extending therefrom for the delivery of gas to the burner, there being provided a manually operated valve 12 in the branch pipe 11. The burner comprises a burner head designated in general by the reference character 13 with the usual pipe section 14 integral therewith and carrying at its free end the enlarged head 15 for attachment to the branch pipe 11, the head 15 being of the type equipped with damper controlled air openings for the regulated admission of air for mixture with the gas to provide proper combustion.

The burner head 13 comprises top and bottom sections 16 and 17 respectively of opposed channel formation in cross section to provide an annular gas chamber 18 communicating with the gas supply pipe 14, the upper edges of the side walls of the bottom channel member 17 of the burner head being straight or uninterrupted while the lower edges of the side walls of the top channel member 16 of the burner head are provided with spaced openings 19 forming concentric rings of gas passage burner openings as will be readily understood from an inspection of Figures 3 and 4.

The connection between the top and bottom members 16 and 17 of the burner head comprise headed screw bolts, preferably two of such bolts being employed and passed downwardly through vertically aligned openings in the top and bottom sections 16 and 17 with the heads 21 of the screw bolts 20 counter-sunk in openings formed in the top section 16 as shown in Figure 4. A nut 22 is threaded on the lower end of each screw bolt 20 for engagement with the bottom side of the bottom section 17 for cooperation with the bolt head 21 for holding the top and bottom sections 16 and 17 of the burner head in rigid assembled relation. It is intended that the sections of the burner head be connected together by screw bolts 20 that may be generally of oversized length so that when the burner is mounted in a gas range, as shown in Figures 2 to 4, the lower projecting ends of the screw bolts 20 that rest upon the bracket plate 23 or the like may be cut off to the desired length for the proper levelling of the burner head 13 in the gas range, the screw bolts 20 constituting the supporting means for the burner.

To intensify heat from the burner and also for the promotion of combustion by pre-heating the air and gas mixture in the chamber 18 of the burner head, there is provided an auxiliary burner in the form of a curved relatively small burner

pipe 24 supported at one end between the top and bottom sections 16 and 17 of the burner head 13 with the other or gas burning end 25 disposed centrally of the opening in the burner head 13 as shown in Figure 3. The burner pipe 24 as shown in Figure 3 is of arcuate formation with the gas burning end 25 thereof directed downwardly a distance to terminate between the upper and lower edges of the bottom section 17 of the burner head so that the flame from said burner will be spread upon said lower section. To accommodate the mounting of the auxiliary burner pipe 24, the opposed faces of the inner side walls of the top and bottom sections 16 and 17 of the burner head are provided with registering grooves 26 and 27 respectively, the bottom section 17 adjacent said grooves being provided with an enlargement 28, shown more clearly in Figures 3 and 5, as providing an additional support for the burner pipe 24. The terminal end of the pipe 24 supported within the burner head is flanged outwardly as at 29 for engagement with adjacent parts of the sections of the burner to aid in retaining the burner pipe 24 in its proper position.

From the above detailed description of the invention, it is believed that the construction and operation thereof will at once be apparent, it being noted that the gas and air mixture fed through the pipe 14 is delivered into the annular chamber 18 for discharge through the concentric rings of burner openings 19 and also from said annular chamber 18 through the auxiliary burner pipe 24 for ignition at the discharge pipe end 25. Heat from the burner is greatly intensified by the addition of the auxiliary burner pipe 24 which greatly lessens time periods for cooking and the like. The provision of the auxiliary burner pipe 24 with its downwardly directed burner nozzle 25 operates to heat the lower burner section 17 to increase combustion in the operation of the main burner. The provision of the screw bolt supports 20 for the burner head permits standard manufacture with the screw bolts normally of oversized length, but which may be shortened to accomplish the level mounting of the burner head.

While there is herein shown and described the preferred embodiment of the invention, it is nevertheless to be understood that minor changes may be made therein without departing from the spirit and scope of the invention as claimed.

I claim:

In a gas burner of the character described, an annular burner head comprising top and bottom channel members inclosing a central open space and having concentric rings of burner openings at the meeting edges of the channel members, means for securing the channel members in assembled relation and an auxiliary gas burner pipe clampingly supported between said channel members with its open burner end disposed centrally of the burner head directed downwardly and terminating within said central space for heating the bottom channel member to increase combustion in the burner head, the clamping engagement of the burner head sections with said auxiliary burner pipe including the provision of mating grooves in opposed edges of said channel sections in which the auxiliary burner pipe is seated and an outwardly directed flange on the inner end of the auxiliary burner pipe engaged with adjacent portions of the inner faces of the top and bottom channel sections.

JOHN POLNEY.