(19) DANMARK

(10) DK/EP 3330593 T3

Patent- og Varemærkestyrelsen

(12) Oversættelse af europæisk patentskrift

(51) Int.Cl.: *F 21 S 8/02 (2006.01)* *F 21 K 9/61 (2016.01)* *F 21 V 11/08 (2006.01)* *F 21 Y 105/18 (2016.01)* *F 21 Y 113/10 (2016.01)* *F 21 Y 115/10 (2016.01)*

(45) Oversættelsen bekendtgjort den: **2019-10-14**

(80) Dato for Den Europæiske Patentmyndigheds bekendtgørelse om meddelelse af patentet: **2019-07-17**

(86) Europæisk ansøgning nr.: **17161202.1**

(86) Europæisk indleveringsdag: **2017-03-15**

(87) Den europæiske ansøgnings publiceringsdag: **2018-06-06**

(30) Prioritet: **2016-12-02 GB 201620549**

(84) Designerede stater: **AL AT BE BG CH CY CZ DE DK EE ES FI FR GB GR HR HU IE IS IT LI LT LU LV MC MK MT NL NO PL PT RO RS SE SI SK SM TR**

(73) Patenthaver: **Disruptive Marketing Limited, 6 Sheepscar Court Northside Business Park, Leeds, Yorkshire LS7 2BB, Storbritannien**

(72) Opfinder: **ROBINSON, Adam, 11 Emley View, Skelmanthorpe, Huddersfield , HD8 9US, Storbritannien**
SLEVIN, Peter, 33 Longlands Bank, Thongsbridge, Holmfirth, HD9 7 HR, Storbritannien
REYNARD, Paul, Woodside, Highfield Lane, Oakworth, Keighley, BD22 7 JB, Storbritannien

(74) Fuldmægtig i Danmark: **Zacco Denmark A/S, Arne Jacobsens Allé 15, 2300 København S, Danmark**

(54) Benævnelse: **Halo-lysenhed**

(56) Fremdragne publikationer:
EP-A1- 2 902 693
EP-A1- 3 015 761
DE-A1- 4 312 889
US-A1- 2015 260 905

DESCRIPTION

[0001] This invention relates to a lighting unit of the kind used to mount a lamp on a ceiling, wall, panel or other fixture, particular but not exclusively within a cavity formed in the fixture. In a typical application is the units may be received within a hole in a suspended ceiling or other fascia.

[0002] The lamp may comprise a LED lamp array. Alternative embodiments may employ halogen bulbs, OLED lamps or incandescent lamps.

[0003] Recessed LED lights, commonly known as LED downlights are widely known. Typically a LED downlight fixture comprises an array of LEDs in thermal connectivity with a heat sink, the array of LEDs being positioned adjacent a first aperture of a reflector assembly. A diffuser may be positioned proximal to and extending across a second aperture. Due to the arrangement and directional nature of LED components, these light units project light vertically downwards in a narrow beam angle with essentially no diffusion in a horizontal direction.

[0004] Spotlights may include light scattering components disposed either directly at the bottom of a lamp reflector or within a certain distance from it in order to evenly illuminate a surrounding area. Examples are DE 2121074, DE 3633976 and DE 3737324. These systems rely on redirection of light created by a primary light source. This limits the colour and brightness of the created ambient light to that of the primary light. DE 9104995 discloses an arrangement wherein a light directing component is coloured to subsequently change the colour of the ambient light. Such a system limits the ambient light to a single colour and requires manual changing of the diffuser component.

[0005] DE 4312889 discloses a luminaire with a suspended light-guiding body. The light-guiding body comprises light inlet areas and light outlet areas which reflect the impinging or the output light bundle.

[0006] US 2015/260905 discloses an optical waveguide including a first waveguide portion and a second waveguide portion adjacent to and separate from the first waveguide portion. The waveguide portions include light coupling portions that are at least partially aligned and adapted to receive light developed by a light source. The first waveguide portion further has a first major surface with light direction features and a second major surface opposite the first major surface. The second waveguide portion further has a third major surface proximate the second major surface with an air gap disposed therebetween and a fourth major surface opposite the third major surface wherein the fourth major surface includes a cavity extending therein.

[0007] EP 3015761 discloses a light assembly comprising a one-piece optical element with a lateral section. The lateral section comprises an optical waveguide region and an optical decoupling element arranged on a surface at a laterally out coupling region for decoupling the

contrast-reducing brightening light laterally relative to the directed illumination luminous flux. The light source arrangement has a primary light source structure and a light source arrangement secondary light source structure.

[0008] EP 2902693 discloses an LED decorative lighting.

[0009] According to the present invention a light unit comprises a housing having a central symmetry axis;
a support located in the housing;
a main lamp located axially on the support; and
a multiplicity of secondary lamps located on the support and arranged in an array around the main lamp;
a front casing defining a central aperture to which light from the main lamp passes to the exterior in use, the front casing preventing light from the secondary array from entering the central aperture;
the front casing and housing defining a light guide channel;
a light guide located in the channel, the light guide having a first end comprising a light inlet proximate the array of secondary lamps and a second end comprising a light outlet proximate a periphery of the housing.

[0010] The present invention provides a downlight, preferably an LED downlight which has a secondary peripheral light source. This may direct light horizontally, preferably throughout an angle of 360° from the light fixture in order evenly illuminate the mounting surface.

[0011] The light guide may, in use, deflect light from a direction parallel to the central axis at the light inlet to a direction away from the central axis at the light outlet.

[0012] The light outlet may be located in a plane normal to the central axis.

[0013] The light guide may be rotationally symmetrical about the central symmetry axis. The light guide may be circular. Alternatively the light guide may be oval or may have n-fold symmetry, wherein n is an integer, about the central axis.

[0014] The light guide outlet may be directed radially outwardly of the housing.

[0015] The light guide may be annular or toroidal having a first portion extending axially from the light inlet and a second portion extending radially to the light outlet. The light guide may be generally L-shaped in cross section.

[0016] An annular collar may be located over the light guide channel, the collar having an axial aperture communicating with the central aperture and the collar overlying the light guide in order to restrict egress of light to the circumferential or peripheral outlet.

[0017] The light guide may be composed of an acrylic polymer or other high refractive index

material wherein the refractive index is selected so as to achieve total internal reflection of light passing from the light inlet to the light outlet.

[0018] The inner and outer annular surfaces of the light guide may be frosted or textured to optimise internal reflection.

[0019] Texturing or frosting of the annular surfaces improves dispersion of light by internal reflection within the light guide. This has the beneficial result in making the lamination emitted from the outlet surface to be more uniform to create a more even dispersion of light across the surface of the fascia on which the unit is mounted.

[0020] The frosting may provide an unpolished or matt appearance and may be achieved by not polishing the guide after removal from a mould. The moulded guide may be sandblasted to remove tooling marks but not subsequently polished. The provision of a frosted surface has the advantage of reducing manufacturing costs as well as improving light dispersion across the fascia surface.

[0021] The radius of the surface facing towards the central axis may have a maximum value having a central radius curving from the light inlet towards the outer flange surface, in order to optimise total internal reflection in use. The width in a radial direction of the light inlet is greater than the width in the axial direction of the outlet in order to concentrate the light beam as it passes from the inlet to the outlet.

[0022] One or both of the inlet and outlet surfaces of the light guide may be textured to increase uniform and efficient transmission of light from the outlet. Both of the inlet and outlet surfaces are preferably not textured or frosted and are preferably polished to mirror finish.

[0023] A main LED may provide a full range of white light colour using a LED driver circuit assembly and a dual colour LED chip of 2700K (commonly referred to as 3000K) and 6500K (commonly referred to as 6000K). Mixing of these two colours via the driver's circuit assembly provides a colour contrast temperature (CCT) adjustable from 2700K to 6500K.

[0024] The secondary lamps comprise in an exemplary embodiment by a circular array of 16 LED chips with a total power of 2W. All are Red/Blue/Green RBG or alternating 2700K and 6500K LEDs.

[0025] The primary light brightness may be controlled by increasing the power from 0 to 10W. The secondary light brightness may be controlled by increasing the power from 0 to 2W, this power being distributed across all 16 LED chips.

[0026] A lens may be located in the central aperture in order to focus or collimate the main light beam.

[0027] The primary and secondary lights may be independently or jointly controlled to change

their colour and brightness.

[0028] Peripheral lighting is achieved in a preferred embodiment by 16 low powered LED chips that are mounted in a ring around the main LED chip. The chips may be positioned to point directly downwards parallel to the central axis. This has the advantage of minimising product depth, maintaining similar aesthetic appearance to a standard downlight assembly. Simplified construction is achieved. Peripheral lighting using the light guide which in a preferred embodiment has a toroidal configuration and is L-shaped in cross section.

[0029] Remote control may be provided using computer software or a smart device application. Commands from the software or device may be communicated to individual lights or to groups of lights by wireless communication methods such as Bluetooth or WiFi. However signals may also be sent through the mains power supply.

[0030] A heat sink may be located in thermally conductive communication with the support. The heat sink may be located in contact with a rear surface of the support, so that the heat sink conducts heat directly from the main and secondary LEDs in use.

[0031] Use of a light unit in accordance with the following invention provides many benefits including the following benefits.

1. 1. remote control of the lights including on/off, colour and brightness control;
2. 2. individual and group control of the lights;
3. 3. ability to have either main lighting or ambient lighting only or both from a single unit; and
4. 4. minimal product aesthetics with minimum product extension from the plane of the mounting surface.

[0032] The unit of the present invention is advantageous in relation to arrangement in which a ring of LED chips is located around the external surface of a typical LED downlight. In the latter case substantial unevenness or spotting of light would occur. In addition the placement of the LED chips around the external surface necessitate an undesirable protrusion of the product from the mounting surface of perhaps to a height of 15mm. The internal placement of the LED chips in vertical orientation for a downlight, combined with redirection of light using a light guide achieves superior diffusion and greatly reduces the appearance of spotting. Furthermore the unit has a minimum protrusion from a mounting fascia. Furthermore location of the main and secondary LEDs on the support allows direct connection of the peripheral chips to the heat sink in order to improve cooling performance.

[0033] The invention is further described by means of example but not in any limitative sense with reference to the accompanying drawings of which:

Figure 1 is a perspective view of a light unit in accordance with this invention.

Figure 2 is a side elevation of the unit shown in Figure 1.

Figure 3 is an exploded view of the unit;

Figure 4 is a cross sectional view through the unit;

Figures 5 and 6 are perspective views of the light guide of the unit; and

Figure 7 is a cross sectional view of the light guide.

[0034] The same reference numerals are used to denote like components in each of the Figures.

[0035] The light unit shown in the Figures comprises a main LED chip (1) mounted centrally on a support (2) located in a cylindrical housing (7).

[0036] A multiplicity of secondary LED lamp chips (3) are mounted on the support (2) in a circular array. A heat sink (4) having cooling fins (10) is mounted on the rear surface of the support and provides cooling for both the main and secondary LED chips. A guide (5) for a power supply cable is provided in the back casing (6).

[0037] The housing (7) has a central axis of symmetry and includes a circumferential flange (8). The housing is arranged to fit into an aperture in a ceiling panel or other fascia (not shown) with the flange overlying the surface of the fascia to conceal the aperture.

[0038] The unit is secured to the fascia by means of two spring clips (9) a decorative bezel (11) is secured to the collar by magnets (12).

[0039] Front casing (13) has a cylindrical rear portion (14) and a radially outwardly extending annular flange (15). The rear portion defines an axial cylindrical central aperture (16) within which the main LED chip is axially located. The circular array of secondary LED chips (3) are located radially outwardly of the rear portion. The rear portion contacts the support so that light from the secondary array cannot enter the central aperture to mix with light from the main lamp. Further light from the main lamp cannot pass outwardly to mix with light from the secondary array.

[0040] The housing (7) and front casing (13) define a light guide cavity occupied by light guide (17).

[0041] The light guide (17) is shown in greater detail in Figures 5 to 7 and comprises an annular or toroidal structure formed from acrylic polymeric resin. The structure comprises a first generally cylindrical annular portion (18) having a planar radially extending annular light inlet surface (21) arranged to be located proximate to the light emitting portions of the LEDs of

the secondary array. The light inlet surface (21) may be located in contact with the LEDs or may be arranged in proximate spaced relation to the LEDs.

[0042] The light guide has a radially outwardly extending flange portion (20) and a cylindrical outermost light outlet surface (22). The surface of the light outlet (22) extends coaxially with the central axis of symmetry of the unit.

[0043] The inlet (21) and outlet (22) surfaces are polished to a mirror-like smooth finish.

[0044] The radially inner surface (23) extends in a smooth curve having a maximum radius from the light inlet (21) to the flange portion (20) in an axial direction towards the outward radial direction parallel to the fascia surface leading to the light outlet (22). The outer surface (26) has a stepped configuration to allow the guide to be accurately located within the back casing (8) in contact with the overlying flange (19) overlying the fascia surface.

[0045] The inner (23) and outer (26) surfaces have a matt or unpolished texture to provide a frosted appearance in order to enhance scattering of light by internal reflection within the guide. The inlet surface (21) has a greater area than the outlet surface (22) so that a beam of light passing from the inlet to the outlet is concentrated to provide more intense illumination of the fascia surface adjacent the guide.

[0046] This arrangement optimises total internal reflection by light passing from the light inlet to the light outlet. The width of the annular portion (18) in a radial direction with respect to the central axis is greater than the width of the flange portion in the axial direction with respect to the central axis in order to concentrate the light beam passing from the inlet to the outlet.

[0047] A lug (24) on the rear end of front casing (13) is received in a correspondingly shaped rebate in the light guide in order to securely engage the casing to the guide.

[0048] A lens (25) is engaged within the central aperture (16) and is protected by an overlying window (26).

[0049] The light inlet (21) and outlet (22) surfaces of the light guide are polished in order to enhance uniform transmission of light emitted by the light outlet. This serves to reduce uneven illumination or spotting of the fascia surface.

[0050] The unit of the present invention provides a homogeneous and brightly illuminated halo effect on the ceiling or other fascia around the light unit.

REFERENCES CITED IN THE DESCRIPTION

This list of references cited by the applicant is for the reader's convenience only. It does not

form part of the European patent document. Even though great care has been taken in compiling the references, errors or omissions cannot be excluded and the EPO disclaims all liability in this regard.

Patent documents cited in the description

- DE2121074 [0004]
- DE3633976 [0004]
- DE3737324 [0004]
- DE9104995 [0004]
- DE4312889 [0005]
- US2015260905A [0006]
- EP3015761A [0007]
- EP2902693A [0008]

Patentkrav

1. Lysenhed, der omfatter et hus (7) med en central symmetriakse; en holder (2), der er placeret i huset; en hovedlampe, der er placeret aksialt på holderen; og en flerhed af sekundære lamper (3), der er placeret på holderen og er indrettet i en indretning rundt omkring hovedlampen; et frontkabinet (13), der definerer en central åbning (18), til hvilken der under anvendelsen kommer lys ud fra hovedlampen, hvor frontkabinettet forhindrer lys fra den sekundære indretning i at komme ind i den centrale åbning;
hvor frontkabinettet og huset definerer en lysføringskanal; hvor der er placeret en lysføring (17) i kanalen, hvor lysføringen har en første ende, der omfatter en lysindgang (21) nær ved indretningen af sekundære lamper og en anden ende, der omfatter en lysudgang (22) nær ved en periferi af huset.

2. Lysenhed ifølge krav 1, hvor lysføringen (17) er indrettet til at afbøje lys fra en retning parallelt med midteraksen ved lysindgangen til en retning væk fra midteraksen ved lysudgangen (22).

3. Lysenhed ifølge krav 2, hvor lysudgangen (22) er placeret i et plan normalt på midteraksen.

4. Lysenhed ifølge et hvilket som helst foregående krav, hvor lysføringen (17) er rotationssymmetrisk omkring den centrale symmetriakse.

5. Lysenhed ifølge krav 4, hvor lysføringsudgangen (22) er rettet radialt udad fra huset (7).

6. Lysenhed ifølge et af de foregående krav, hvor lysføringen (17) er ringformet med en første del (18), der strækker sig aksialt fra lysindgangen, og en anden del (20), der strækker sig radialt mod lysudgangen.

7. Lysenhed ifølge et hvilket som helst foregående krav, yderligere omfattende en ringformet krave, der er placeret oven over lysføringskanalen, hvor kraven har en aksial åbning, der er i forbindelse med den centrale åbning og kraven, som ligger oven over lysføringen (17).

8. Lysenhed ifølge et hvilket som helst foregående krav, hvor lysføringen (17) er sammensat af acrylpolymer.

9. Lysenhed ifølge et hvilket som helst foregående krav, hvor indgangs- og udgangsoverfladerne af lysføringen (17) er polerede, og den radialt indre overflade (23) struktureret.

10. Lysenhed ifølge et hvilket som helst foregående krav, hvor hoved-LED'en (1) er tofarvet på 2700K og 6500K.

11. Lysenhed ifølge et hvilket som helst foregående krav, hvor de sekundære lamper (3) giver en ringformet indretning af RBG eller skiftende 2700K- og 6500K-LED'er.

DRAWINGS

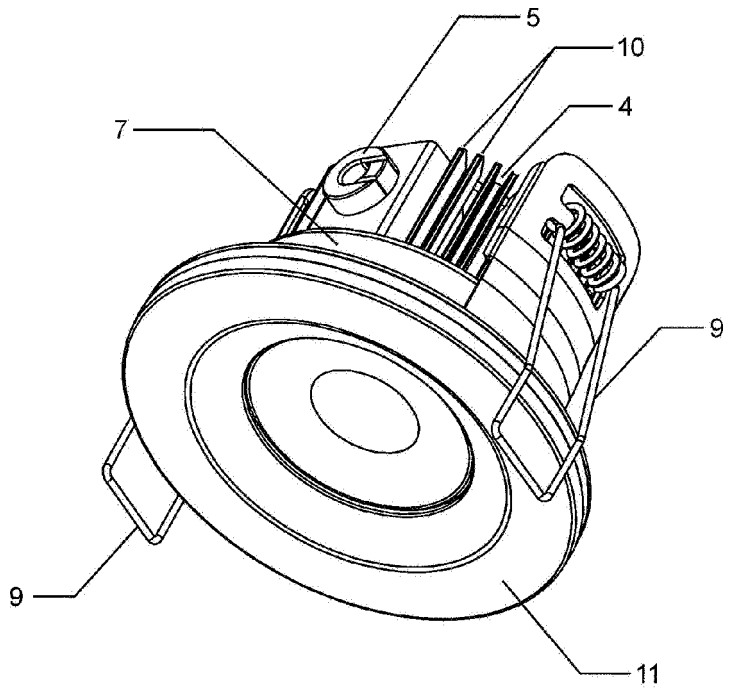

FIG 1.

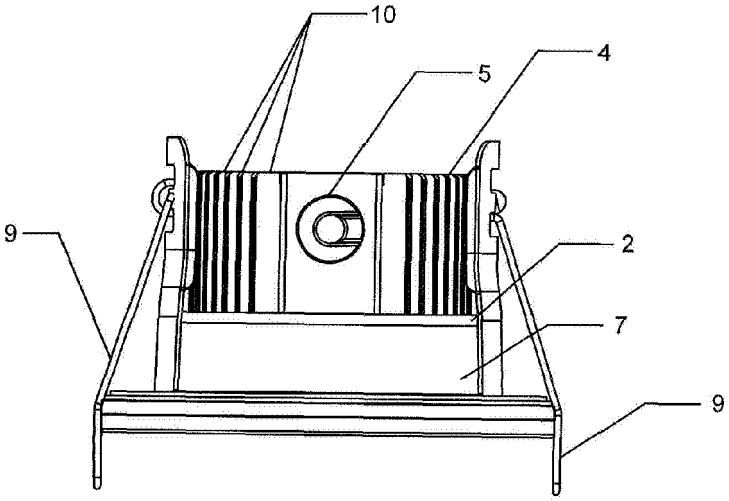

FIG 2.

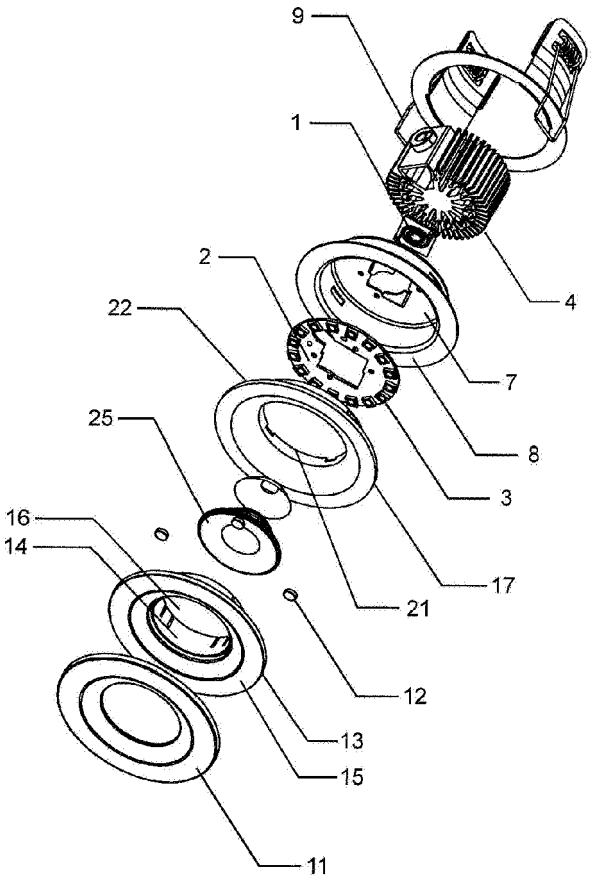

FIG 3.

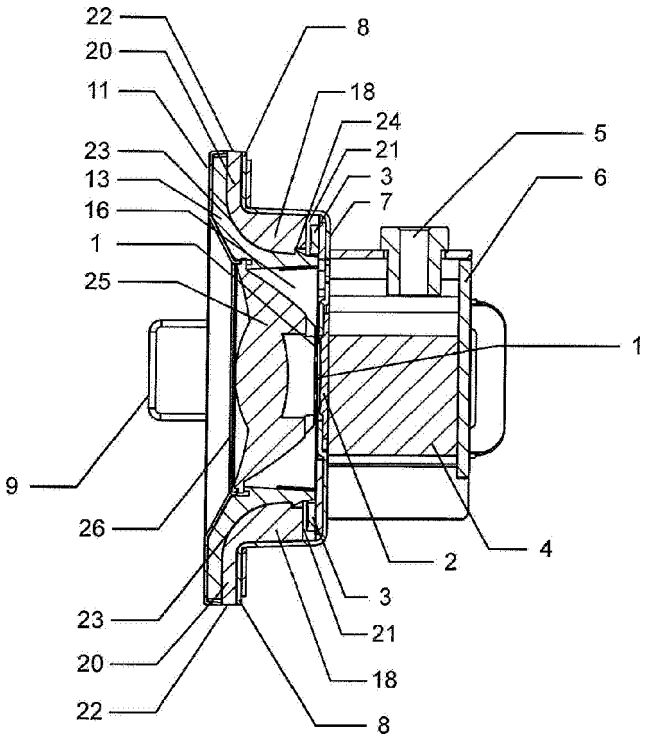

FIG 4.

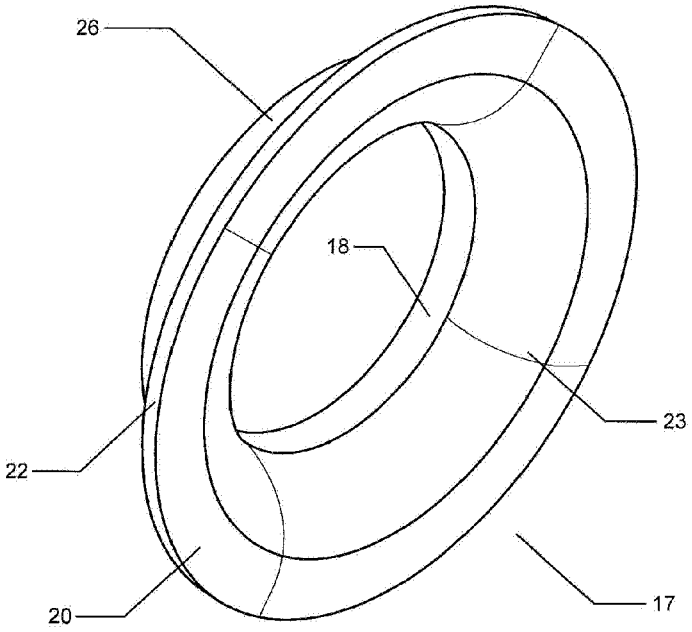

FIG 5.

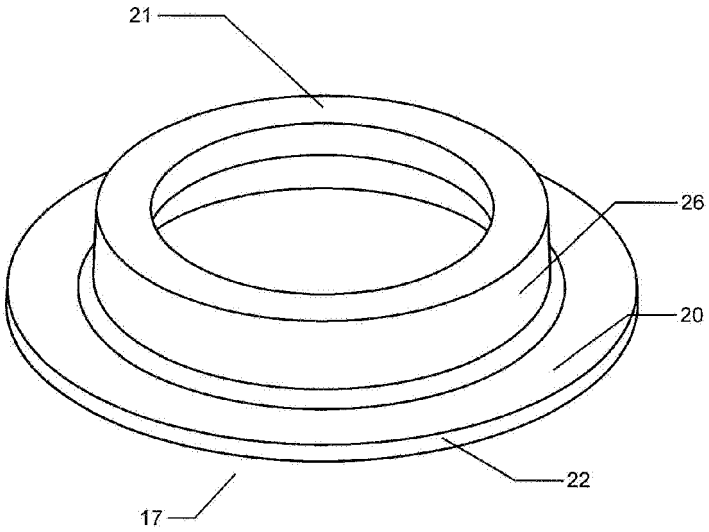

FIG 6.

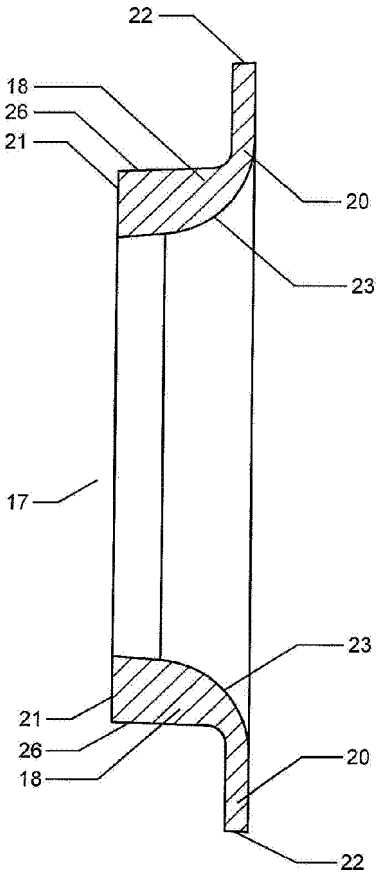

FIG 7.