(19) Europäisches Patentamt
European Patent Office
Office européen des brevets

(11) **EP 3 183 175 B1**

(12) **EUROPEAN PATENT SPECIFICATION**

(45) Date of publication and mention of the grant of the patent:
24.11.2021 Bulletin 2021/47

(21) Application number: **14799024.6**

(22) Date of filing: **18.08.2014**

(51) Int Cl.:
B65C 3/06 *(2006.01)*

(86) International application number:
PCT/IT2014/000220

(87) International publication number:
WO 2016/027286 (25.02.2016 Gazette 2016/08)

(54) **MACHINE AND METHOD FOR APPLYING SHRINK SLEEVE LABELS**

VORRICHTUNG ZUM ANBRINGEN UND SCHRUMPFEN VON SCHLAUCHETIKETTEN UND VERFAHREN ZUM ANBRINGEN BESAGTER ETIKETTEN

MACHINE PERMETTANT D'APPLIQUER DES ÉTIQUETTES-MANCHONS RÉTRACTABLES ET PROCÉDÉ D'APPLICATION DESDITES ÉTIQUETTES

(84) Designated Contracting States:
AL AT BE BG CH CY CZ DE DK EE ES FI FR GB GR HR HU IE IS IT LI LT LU LV MC MK MT NL NO PL PT RO RS SE SI SK SM TR

(43) Date of publication of application:
28.06.2017 Bulletin 2017/26

(73) Proprietor: **NEWTECH S.R.L.**
20129 Milano (IT)

(72) Inventor: **GHINI, Enrico**
03043 Cassino (IT)

(74) Representative: **Santi, Filippo et al**
Barzanò & Zanardo Roma S.p.A.
Via Piemonte 26
00187 Roma (IT)

(56) References cited:
WO-A1-2004/067385
WO-A1-2005/082601
WO-A1-2011/015981
WO-A2-2009/000668

Note: Within nine months of the publication of the mention of the grant of the European patent in the European Patent Bulletin, any person may give notice to the European Patent Office of opposition to that patent, in accordance with the Implementing Regulations. Notice of opposition shall not be deemed to have been filed until the opposition fee has been paid. (Art. 99(1) European Patent Convention).

EP 3 183 175 B1

Description

[0001] The present invention relates to a machine for applying shrink sleeve labels and to a process for applying said shrink sleeve labels.

[0002] More particularly, the invention refers to the field of labelling different containers (e.g. bottles, cups or bottles, either made up of glass or of plastics).

[0003] As it is well known, labelling of containers for food products or for other products can be made by using labels comprised of a plastic film, mainly a printed film, having the property of shrinking when subjected to the heat action, and usually known as heat shrinking film.

[0004] Heat shrinking film has a thin thickness, approximately ranging between 30 and 75 microns, and can be realised by different polymers. Prevailingly, said film is comprised of PVC, PET or OPS. Said labels are usually realised by folding and welding (or gluing) a film band so as to obtain a tubular element, thus joining the two ends of the film band along a line that can be assimilated to a generatrix of the cylinder so obtained.

[0005] Tubular element is flattened and wound as a bobbin, said bobbin supplying machines applying labels obtained from said material by a transverse cut of portions having a set length.

[0006] Said labels are known as "shrink sleeves", the shrinking properties of which are activated by exposure to the heat. They are applied with, or without the use of glue.

[0007] Labelling machines exist, usually and advantageously associated to and provided downward to, machines of the FFS (Form, Fill and Seal) type, i.e. machines that can realise by thermoforming, a continuous band of container, provided one after the other, said containers being coupled each other by the upper part of the same thermoformed band. During the following step, containers are filled with the product (e.g. water or yoghurt), and then the upper opening is sealed, while in the final step a cut is carried out on the upper part of the thermoformed container, said cut being made along the perimeter of the opening of the container, thus permitting separation of single containers.

[0008] Particularly, they are horizontal FFS machines (HFFS), since they move container along a horizontal linear advancement direction (wherein by "horizontal" it is meant a direction substantially parallel with respect to the floor or to the resting plane of the machine) along which different container thermoforming process steps are carried out, i.e. filling, closure and cutting in the relevant stations.

[0009] Further, FS (Fill and Seal) machines exist, said machine starting with already formed cups, stacked each other, that are inserted within the machine, which is similar to the FFS machine, without the provision of the thermoforming step and of the final cut.

[0010] In order to carry out said steps, said machines work according to a batch mode, i.e. each step of the cycle is carried out blocking advancement of continuous band (for FFS machine) on which containers are obtained in correspondence of the relevant working station, and when the step is terminated, they are moved again until blocking the same in correspondence of the following working station.

[0011] At present, machines for applying shrink sleeve labels that must operate along with FFS or FS machines are so realized to provide separate steps and actuated according to a batch mode, said steps being distinct and successive each other, namely:

- supplying from the bobbin and cutting of the tubular element to obtain the shrink sleeve label, or the direct application on the container after having cut the same label;
- supplying the shrink sleeve label on an application device;
- applying a shrink sleeve label on the container by said application device;
- exposing the label to heat to obtain heat shrinking of the sleeve label, that will adhere to the container.

[0012] Labelling steps of the container are thus carried out along said linear advancement direction, downward the FFS process, or integrated with the same.

[0013] Particularly, two possible applications of the label are known, namely:

- employing a traditional machine provided at the outlet of the FFS, thus after the cut and the separation of the cups, then containers or cups are overturned upside down, and are labelled from the above;
- employing a machine integrated within FFS before the final cutting operation of the containers, thus integrated between FFS steps and thus bound to the same motion laws (as described in International patent application n. WO 2004/067385 A1). In detail, WO 2004/067385 A1 discloses a machine and a corresponding method for applying shrink sleeve labels on a column of containers provided one afther the other along a linear advancement direction. The machine comprises supply means for supplying the labels to means for application of these on every container; means for advancement of said label application means along said linear advancement direction; a system for supporting and moving the column of containers along said linear advancement direction; and heating means for said sleeve labels, provided along said support and movement system of said containers, to obtain a partial or full shrinking of said sleeve labels when applied on the relevant containers. The means for applying said sleeve labels is a shuttle which moves by said advancement means and they bring labels to four corresponding containers at a time. The shuttle includes support and pushing means configured to cause the displacement upward of said labels with respect to the relevant four containers, so as to apply the labels

from the bottom of said corresponding containers.

[0014] However, a drawback of the container labelling process according to the known solution providing integration of the labelling machine in FFS is due to the fact that the entire labelling step must be integrated and synchronised with the timing of the other steps, when containers motion is stopped.

[0015] Sometimes, said time is not sufficient to conveniently carry out some operations, so that a solution permitting prolonging the same, even of few tenths of a second, would cause a reduction of efficiency and productivity of the FFS machine.

[0016] Further, by the known solutions, it is more difficult adapting said steps of the labelling process to the variables introduced by different shape of the container, and particularly as far as the heat shrinking process is concerned, by different materials by which labels can be realised.

[0017] Thus the needing arises of separating the container labelling process with respect to the FFS or FS process, so as to be able to obtain a process that can be better adapted to the process customization requests, as well as a much faster process.

[0018] These and other results are obtained according to the invention by suggesting a self-sufficient labelling machine that can work according to a continuous mode and that can be adapted to every existing FFS or FS machine.

[0019] It is the object of the present invention a machine according to claim 1, realised to apply shrink sleeve labels on at least a column of containers provided one after the other along a linear advancement direction, said machine comprising:

- supply means for supplying said labels to means for continuous application of the same labels on every container;
- means for continuous advancement of said label application means along said linear advancement direction;
- a system for supporting and continuously moving at least one column of containers along said linear advancement direction, each container being supplied from above on said support and movement system;
- heating means for said sleeve labels, provided along said support and movement system of said container, to obtain a partial or full shrinking of said sleeve labels when applied on the relevant container;

  said means for applying said sleeve labels moving by said advancement means so as to bring one of said labels in correspondence of one of said containers and being so configured to cause the displacement upward of said label with respect to the relevant container to apply the label from the bottom on the same continuously moving container; and

  said heating means being configured so as to activate partial or full shrinking of said labels with respect to said containers when said labels are applied on said containers during the continuous transportation of said containers by the relevant support and movement system.

[0020] In an embodiment according to the invention, said support and movement system for said containers can comprise a plurality of support elements comprising a plurality of cavities that can support at least a column of containers in an upright position and provided as a grid, i.e. spaced each other, and placed along parallel lines and columns.

[0021] In an embodiment according to the invention, said support elements can be plates, preferably comprised of rigid material, and so shaped to have a plurality of holes for housing, from above, each container.

[0022] In an embodiment according to the invention, said support elements can be transverse elements, parallel each other and provided transversely with respect to the linear advancement direction of the machine, said transverse elements being spaced each other so as to create a cavity to house a line of containers.

[0023] In an embodiment according to the invention, said support elements can be comprised of mats made up of flexible material shaped to have a plurality of holes for housing, from above, each one of said containers.

[0024] In an embodiment according to the invention, profile surface of said plurality of cavities can have the lower portion blunt, preferably with a 45° angle.

[0025] According to the invention, said means for applying said labels comprises a column of shuttles for each column of containers, configured in such a way to be wound by the relevant label when said supply means have supplied a label on the same, support and pushing means for said label, and motion means for moving said pushing means with respect to said shuttle to apply said label on said container, said motion means being so configured to bring said application means from a rest position, wherein said label winds said shuttle and is supported by said support and pushing means, to an application position, wherein said label winds said container and is supported by said support and pushing means.

[0026] Particularly, according to one embodiment of the invention, said application means can comprise two support transverse elements, transversely provided with respect to the linear advancement direction, one above the other, each shuttle being integral with said upper support transverse element, said pushing means being integrally coupled with the lower support transverse element, said movement system being able to cause the displacement of the lower support transverse element with respect to the upper support transverse element to cause the displacement upward of said label with respect to the container to apply the label from the bottom on the same moving container.

[0027] In an embodiment according to the invention,

said application means can further comprise connection means between said transverse support elements.

[0028] In an embodiment according to the invention, said application means can further comprise return means between said support transverse means in said rest position.

[0029] According to the invention, said motion means of said application means comprises a cam — roll assembly, wherein said cam is fixed with respect to the resting plane of the machine and said roll is integral with said pushing means.

[0030] In an embodiment according to the invention, said roll can be integral with said lower support transverse element.

[0031] In an embodiment according to the invention, said heating means can comprise pre-heating means for partial shrinking of said labels on said containers, and heating means, downward said pre-heating means, for full shrinking said labels on said containers.

[0032] In an embodiment according to the invention, said pre-heating means can comprise a pair of lateral hollow diffusers, placed according to a longitudinal direction with respect to the linear advancement direction, laterally with respect to each one at least one column of containers, so as to be aside said containers when the same are transported through said pre-heating means, said lateral hollow diffusers being provided with a longitudinal slot, said slot being placed so as to be in correspondence of a portion of said containers and being connected with a conduct for passage of a fluid through said slots to activate partial heat-shrinking of said labels on said portion of said containers.

[0033] In an embodiment according to the invention, when said machine provides two or more columns of containers, said pre-heating means can comprise a pair of lateral diffusers for each column of containers, each pair of lateral diffusers being offset, so that partial heat-shrinking of a column of containers occurs before heat-shrinking of the adjacent column.

[0034] In an embodiment according to the invention, said heating means can comprise full heating means, including a channel longitudinal with respect to the linear advancement direction, for each column of containers, said longitudinal channel being connected to a fluid conduct and comprising a chamber with two outlet openings for fluid suitable to direct said fluid according to the direction of the walls of said channel for a uniform distribution of said fluid within said channel and to activate full heat-shrinking of said label on said container.

[0035] In an embodiment according to the invention, said walls of said at least one channel can comprise a portion so shaped to deviate flow of the fluid toward a portion of said container and of said label.

[0036] In an embodiment according to the invention, said heating means can comprise a suction hood.

[0037] In an embodiment according to the invention, said means for supplying said labels can be provided along the linear advancement direction of said containers.

[0038] In an alternative embodiment according to the invention, said label supply means can be provided laterally with respect to the linear advancement direction of said containers and said application means can make a diagonal translational motion in order to be supplied with said labels in correspondence of said supply means and in order to be in correspondence of said containers to permit application from the bottom of said labels on said containers. Further, it is an object of the present invention a process according to claim 19 for applying shrink sleeve labels on at least a column of containers provided one after the other along a linear advancement direction by means of the machine according to the invention described herein above, said process providing the following steps:

- supplying said labels to means for continuous application of the same labels on every container;
- continuously moving by advancement means said application means of said labels along said linear advancement direction;
- supplying from above each container on a support and motion system;
- continuously moving by said support and motion system at least one column of containers along said linear advancement direction;
- continuously moving said sleeve label application means by said advancement means so as to bring one of said labels in correspondence of one of said containers;
- causing displacement upward of said label with respect to the relevant container to apply the label from the bottom on the same moving container;
- heating said sleeve labels on said containers by heating means provided along said container support and motion system, to obtain a partial or full heat-shrinking of said sleeve labels when applied to the relevant container; and
- activating partial or full heat-shrinking of said labels with respect to said containers when said labels are applied on said containers during their continuous transportation of said containers by the relevant support and motion system.

[0039] The invention will be now described for illustrative, but not limitative, purposes, with particular reference to the drawings of the enclosed figures, wherein:

figure 1 shows a top perspective view of the machine for applying shrink sleeve labels according to the invention;

figure 2a shows a top perspective view of the support and motion element for containers of the machine of figure 1, according to a first embodiment; figure 2b shows a top perspective view of the support and motion element for containers of the machine of figure 1, according to a second embodiment;

figure 2c shows a partial section view of the support element of figure 2a, taken along the plane IIc;
figure 2d shows a partial section view of the support element of figure 2b, taken along the plane IId;
figure 3 shows a top perspective view of the supply step of sleeve labels to label application devices of machine of figure 1;
figure 4 shows a lateral view of the sleeve label application step to containers by application devices of machine of figure 1;
figures 5a - 5c show top perspective views of sleeve label application devices of figure 4 in the different steps of application of the labels to containers;
figure 6 shows a top perspective view of the pre-shrinking phase of the sleeve labels on containers by pre-heating means of machine of figure 1; figure 7 is a front section view of the pre-heating means of figure 6;
figure 8 shows a top perspective view of the heat-shrinking step of sleeve labels on connectors by heating means of the machine of figure 1;
figure 9a shows a front section view of heating means of figure 8 taken along plane IXa;
figure 9b shows a front section view of heating means of figure 8 taken along plane IXb; and
figure 10 shows a top perspective view of a second embodiment of the machine according to the invention.

[0040] Making reference to figure 1, it is shown a preferred embodiment of the labelling machine according to the invention, indicated by reference number 1.

[0041] Said machine 1 is realized to apply one or more shrink sleeve labels 2 to one or more containers 3 along a linear advancement direction A. Particularly, said linear advancement direction A is horizontal, i.e. parallel with respect to the machine 1 resting plane.

[0042] In the embodiment of machine 1 according to the invention shown in the figure, containers 3 have a frustum-conical shape, with the lower base 13, having the lower surface faced downward and the larger base 14 faced upward and having a perimeter edge 15 projecting with respect to the body of the same container 3. Being mainly containers for liquid or semiliquid food products, such as yoghourt or creamy products, said containers 3 must be conveniently kept in an upright position, to prevent that its contents move and displace within the same. In fact, some food products are of the stratified type, e.g. a yoghourt with a layer of jam, and to fulfil with the needing of displaying it to the final consumer, said stratification must be maintained intact.

[0043] In further embodiments, shape of the container can be different, without departing from the scope of the present invention.

[0044] Further, in the present embodiment of machine 1 reference is made to sleeve labels 2 obtained from a heat-shrinkable material, preferably a plastic material, closed to realize a hollow cylinder having such dimensions to wind, even only partially, with respect to its height, the outer surface of the container 3 to be labelled.

[0045] In the shown embodiment it is described and illustrated, for exemplificative purposes, a machine 1 suitable for transporting and labelling at the same time four containers 3 placed along four columns of containers 3. However, the machine 1 according to the invention can be conveniently employed also to label a plurality of containers, according to the manufacturing needing and to the width of the manufacturing line.

[0046] Machine 1 according to the invention comprises a system 4 for supporting and moving one or more container 3 columns along the linear advancement direction A. Said support and motion system 4 is configured so as to make an endless continuous movement, for continuously transporting said one or more container 3 column, when they are supported by said support and motion system 4. More particularly, support and motion system 4 comprises a plurality of support elements 9, able to support said containers 3 in an upright position and placed according to a grid pattern, i.e. spaced each other and along parallel lines and columns. Further, support and motion system 4 comprises motion means 16 for said support elements 9, in this specific case two transmission chains 16 (e.g. partially shown in figures 2a, 2b and 5a - 5c), connected on lateral edges of support elements 9and able displacing said support elements 9 with an endless continuous movement, thus creating a single chain element (as shown in figure 1).

[0047] In the embodiment shown in figures 1 and 2a, said support elements 9 are shaped so as to have a plurality of holes 10 for housing, from the above, each one of said containers 3, with their lower base 13 faced downward, so that upper edge 15 of the container can rest on the contour surface 17 of each hole 10 of the support element 9. Particularly, said support elements 9 have a central line with four shaped holes 10 and two lines of hemi-holes 11 lateral with respect to said central line of holes 10, so that when a support element 9 is provided aside a further support element 9, hemi-holes 11 of support elements 9 placed side by side can support a further line of containers 3.

[0048] Said support elements 9 are thus segments of a single chain, placed side by side so as to house a plurality of containers 3 and able to lie along a common plane during transportation of containers 3 and at the same time to rotate to adapt to the run of the transmission chain 16.

[0049] Said support element 9 can be comprised of rigid material, e.g. aluminium plates, or of flexible material, e.g. a holed flexible mat.

[0050] As an alternative to the embodiment described, as shown in figure 2b, support elements can be simply a plurality of transverse elements 35, parallel each other and provided transversely with respect to the linear advancement direction A of machine 1, and spaced each other so as to create a cavity 18 to house a row of containers 3 between two transverse elements 35. In this

case too, containers 3 rest their upper edges 15 on perimeter edges 17 of said transverse elements 35, in correspondence of cavity 18.

[0051] While embodiment shown in figure 2a is particularly convenient when containers 3 are separated, and thus independent, second embodiment is much easier and cheap to realise, but much more suitable for supporting containers 3 joined each other in correspondence of their upper edges 15. Making reference to the cross sections of embodiments of the described support elements 9 and 35 shown in figures 2c and 2d, it is observed that said contour surface 17 of said holes 10 or of said hemi-holes 11 or of said transverse elements 35, in correspondence of cavities 18, have the lower portion blunt, preferably with an angle of 45°, so as to ease insertion from the bottom of sleeve labels 2 on the body of said container 3, without interfering with the same and at the same time permitting vapour or fluid reaching the highest part of the container for fixing the label to the neck of the container.

[0052] Making reference to figures 1 and 3, it is observed that machine 1 according to the invention further comprises means 5 for applying sleeve labels 2 to said one or more containers. Said application means 5 are moved and supported along said linear advancement direction A by a relevant support and motion system, or advancement means, 6, e.g. comprising a transmission chain 19 that can move said application means 5 according to a continuous endless movement, thus realizing a closed continuous chain.

[0053] Application means 5 are supplied with sleeve labels 2 by supply means 12 that can realize labels 2 and supply them to application means 5. Said supply means 12 can be part of the machine 1 or they can be of different type, without departing from the scope of the present invention.

[0054] In this embodiment, said supply means 12 that are able to make and supply labels can work at a rate of 400 - 450 labels per minute, with labels suitable to containers with a height of about 10 cm.

[0055] Further, in the present embodiment, said supply means 12 can separate and supply label 2 obtained form a holed tubular element. In other embodiments, said tubular element can be not holed before, and said supply means 12 can cut the tubular element supplying the sleeve label to be realised.

[0056] Label 2 application means 5 are provided under said label 2 supply means 12 and are provided along lines so as to correspond to the lines of containers 3 transported by support and motion means 4 of said containers 3.

[0057] Said application means 5 comprise a label 2 application shuttle 20 for each column of containers 3 to be labelled. Four shuttles 20 are provided in this embodiment, placed along a single line, each shuttle 20 having an at least partially frustum-conical shape (e.g. for 1/5 of its height), with the minor base 21 faced upward to ease insertion of the label 2 from above. Each shuttle 20 has a plurality of longitudinal ribs 22, creating depressions on shuttle 20 surface.

[0058] Further, said application means 5 comprise two transverse support elements 23 and 24 (provided transversely with respect to the linear advancement direction A), one 23 above the other 24 and spaced each other, and one or more connection means 25, in the shape of tubular elements, between said transverse support elements 23 and 24.

[0059] Said upper transverse support element 23 is laterally coupled with motion means 6, particularly with the transmission chain 19.

[0060] Particularly, said connection elements 25 are integrally coupled with the upper transverse support element 23 and sliding coupled with said lower transverse support element 24, said lower transverse support element 24 being able making a movement with respect to said upper transverse support element 23, sliding along said connection elements 25. Further, said application means 5 comprise a plurality of pushing means 26, integrally coupled, in correspondence of their lower ends, with the lower transverse support element 24, thus being movable with respect to the upper transverse support element 23, the latter having said shuttles 20 integrally coupled.

[0061] Said pushing elements 26 are provided in a group comprising two or more units, four units in this embodiment, for each shuttle 20, and every group is symmetrically provided with respect to the central axis of the relevant shuttle 20, so that, when the lower transverse support element 24 makes a movement approaching the upper transverse support element 23, each group of pushing elements 26 licks the perimeter surface of the shuttle, in correspondence of the ribs 22, said ribs 22 being in the same number of the pushing elements 26 and being realised on the surface of every shuttle 20.

[0062] Further, said pushing elements 26 have, in correspondence of their upper end, a projecting element or prong 27, so that when a sleeve label 2 is placed on said shuttle 20, resting on every upper end of the pushing elements 26, said prongs 27 being placed inside the label 2 to conveniently maintain the label 2 in its position.

[0063] Said sleeve label 2 application means 5 further comprise a motion system permitting starting the movement of the lower transverse support element 24, along with the pushing elements 26, with respect to the upper transverse support element 23, and thus with respect to the shuttles 20. In the preferred embodiment of the machine 1 according to the invention, said motion system comprises a cam follower assembly. Particularly, close to one or both the lateral portions of the lower transverse support element 24 is coupled with a roll 29 permitting freely rotating about its own axis. Further, said system provides a closed (not shown) or open (as shown in figure 4) shaped path or cam 28, on which said roll 29 can slide. Said shaped path or cam 28 is fixed with respect to the resting plane of the machine 1, and thus it is not movable.

[0064] Therefore, making particular reference to figure

4, it is observed the combined movement of the label 2 application means 5 that are moved along the linear advancement direction A by said transmission chain 19 in combination of the cam - roll assembly. Said application means 5 can pass from a rest position shown in figures 5a and 5b (and shown in a lateral view in figure 4 for first application means 5'), with two spaced transverse support element 23 and 24 and prongs 27 of pushing elements 26 placed in correspondence of the lower portion of shuttles 20, to an application position shown in figure 5c (and shown in lateral view in figure 4 for last application means 5"'), wherein said transverse support element 24 made a movement reducing distance from upper transverse support element 23, thus lifting pushing elements 26 with respect to shuttles 20 and with prongs 27 in correspondence of the upper portion of the shuttles 20. Being prongs 27 inside perimeter of the label at the end of the lifting stroke, upper profile of prongs 27 will be higher than the upper portion of the shuttle 20. This is an important feature since, for "not full body" labels, pushing elements 26 and their prongs 27 rise well beyond the upper portion of shuttles 20, until resting the upper edge of the label 2 under the horizontal flap of container 3, or in any case up to the wished height position. These positioning is obtained by a suitable vertical stroke of pushing elements 26 that obviously must be proportionate to the container 3 sizes and to the height position to be reached by the label.

[0065] Said movement is caused by sliding of roll 29 along cam 28 against the action of return means, such as a spring 30 provided on said connection elements 25 between two transverse support elements 23 and 24.

[0066] Spring 30 further keeps pushing plate 24 in its position also along the return path of the chain or motion means 6, where cam 28 goes without guiding the roll 29 all along the path. Cam 28 is only present in the label 2 lifting zone and then spring 30 brings transverse support elements 23 and 24 down, in rest position.

[0067] As an alternative, it is possible realising a cam accompanying the roll all along its path, bringing back transverse elements in the rest position, without the needing of return means, e.g. the spring.

[0068] As it can be observed from figures 1, 4 and 5a - 5c, during the operation of the machine 1 according to the invention, when shuttle 20 of application means 5 is in a rest position, sleeve labels 2 are supplied by means 12 for supplying labels 2 to the shuttles 20, afterwards when shuttles 20 are in correspondence of containers 3 advancing by support and motion means 4, above the same, application means 5 are gradually brought in the supply position, pushing the sleeve label 2, by the upper end of the pushing elements 26, about the body of containers 3, thus winding them. Therefore, to conveniently vary the time for supplying label 2 to container 3, it is sufficient varying length and slope of shaped path 28, without any limitation due to execution time of other labelling steps, or eventually, of FFS machine steps. Said solution permits making also particularly "tight" labels progressively rising to the cup or container, with advantages for heat-shrinking necessary for ensuring action of the glue in the first heating zone. Further, very thin film labels can be positively managed.

[0069] Label application means 5 are moved by a linear continuous movement, passing from rest position to application position by a continuous movement.

[0070] After that application means 5 have brought label 2 about containers 3, application means 5 remain in the application position until when the pre-heat-shrinking step of label 2 on container 3 occurred, thus moving along with containers 3 by a continuous motion.

[0071] In fact, machine 1 provides pre-heating means 7 suitable for pre-heat-shrinking of sleeve labels 2 on containers 3. Pre-heating means 7 are provided for each column of containers 3, four in the present embodiment. Said means 7, particularly shown in figures 6 and 7, comprise a pair of hollow lateral diffusers 31, provided according to a longitudinal direction with respect to the linear advancement direction A of containers 3, and in such a way to be aside said containers 3 when said containers 3 are conveyed through said pre-heating means 7. Said diffusers 31 have a longitudinal slot 32, advantageously provided close to the upper portion of the diffusers 31 so as to be at the same height of the upper portion of labels 2, and are connected to a relevant fluid conduct 33, e.g. hot air or vapour, provided longitudinally with respect to the advancement direction A of machine 1. Said conducts 33 are cantilevered above said application means 5 and under said containers' 3 transportation means 4.

[0072] Therefore, when containers 3 transported by support elements 9, and labels 2, transported by relevant application means 5 by said motion means 19, through channels realised by diffusers 31, fluid (hot vapour) passing through conducts 33, by said slots 32, hits upper portion of the container 3 - label 2 assembly activating heat-shrinking of upper portion of labels 2 on said containers 3, fixing each other.

[0073] Above diffusers 31, pre-heating means 7 further provide a vapour suction hood 34.

[0074] Advantageously, also for saving space, diffusers 31 are offset and alternate each other between the container 3 columns, so that heat-shrinking of each container 3 column occurs in a different moment. In other embodiments, wherein machine can be wider, particularly in case space between containers transversely to the machine advancement direction is sufficient, said heat-shrinking could occur at the same time if diffusers 31 are placed side by side.

[0075] Finally, making particularly reference to figures 8 and 9a and 9b, machine 1 according to the invention can provide a full heat-shrinking station 8.

[0076] In fact, after the pre-heat-shrinking step, application means 5 are retracted and labels 2, rigidly coupled with containers 3, are transported by container 3 support and motion means 4, toward full heat-shrinking station 8.

[0077] Said station 8 provides a plurality of channels 40 longitudinal with respect to the linear advancement

direction A, wherein the full heat-shrinking of labels 2 on containers 3 occurs. It is provided a channel 40 for each column of container 3 - label 2 assembly.

[0078] Said channels 40 are connected to conducts 41 within which a fluid (hot air or vapour) flows.

[0079] Said channels 40 are so shaped to have a first inlet chamber 42 with an inlet opening 43 connected to the conduct 41, and two lateral outlet openings 44 provided in correspondence of sides of the chamber 41, transversely with respect to the sliding direction A, so as to allow the fluid exiting toward lateral walls 45 of channel 40, hitting outer sides of label 2. Further, flaps 46 can be provided on a portion of walls 45 of channels 40, the inclination of which can be modified according to the needing, to make hot gas flow direction diverging toward a portion of the label 2, thus permitting a better and uniform heat-shrinking of label 2. For example, in correspondence of the most blunt portion of frustum-conical containers 3. Obviously, according to the shape of containers, said flaps 46 can be suitably shaped, inclined, ecc.

[0080] Further, a suction hood 47 is provided in correspondence of the upper portion of the full heat-shrinking station 8.

[0081] Said hood 47 has the function not only of evacuating vapour, but also to direct and determine flow upward to lick container 3 surfaces. Said hood 47 is further provided with a motor controlled by a speed electronic change gear to adjust the rate.

[0082] An alternative embodiment of the labelling machine according to the invention is shown in figure 10, wherein same components with the machine described in the above will be indicated by same reference numbers.

[0083] Machine 1 according to the invention of figure 10 differs from machine described in the above in that sleeve label 2 supply step to label 2 application means 5 occurs in a position lateral and parallel with respect to the advancement linear direction A of containers 3. This advantageously permits creating a simpler and shorter chain of support elements 9, continuously and endless sliding by relevant support and motion means 4. Therefore, label supply means 12 are provided laterally with respect to the advancement linear direction A of containers 3 and label 2 application means 5 make a translational motion, particularly according to a direction diagonal with respect to the container 3 linear advancement direction A, in correspondence of said supply means 12 in order to supply labels 2 to said shuttles 20 in correspondence of said supply means 12, coming back in a position coincident with container 3 linear advancement direction A to permit supplying from the bottom said labels 2 to said containers 3. Particularly, for example, said application means 5 make a relative motion along relevant tracks 48, that are transversely oriented with respect to the linear advancement direction A and integral with support and motion means 6 of said application means 5, so that they pass from a label 2 supply position, in correspondence of label 2 supply means 12, to an application position in correspondence of containers 3.

[0084] Said embodiment has the advantage of obtaining a machine with a lower height, even if wider.

[0085] Preferred embodiments have been described in the above, and variations of the present invention have been suggested, but it is to be understood that those skilled in the art can introduce modifications and changes without departing from the scope of the invention, which is defined by the enclosed claims.

Claims

1. Machine (1) realised to apply shrink sleeve labels (2) on at least a column of containers (3) provided one after the other along a linear advancement direction (A), said machine (1) comprising:

   - supply means (12) for supplying said labels (2) to means for continuous application of the same labels (2) on every container (3);
   - means (5) for continuous advancement of said label (2) application means (5) along said linear advancement direction (A);
   - a system (4) for supporting and continuously moving at least one column of containers (3) along said linear advancement direction (A), each container (3) being supplied from above on said support and movement system (4);
   - heating means (7, 8) for said sleeve labels (2), provided along said support and movement system (4) of said containers (3), to obtain a partial or full shrinking of said sleeve labels (2) when applied on the relevant container (3);

     said means (5) for applying said sleeve labels (2) moving by said advancement means (6) so as to bring one of said labels (2) in correspondence of one of said containers (3) and being so configured to cause the displacement upward of said label (2) with respect to the relevant container (3) to apply the label (2) from the bottom on the same continuously moving container (3); and

     said heating means (7, 8) being configured so as to activate partial or full shrinking of said labels (2) with respect to said containers (3) when said labels (2) are applied on said containers (3) during the continuous transportation of said containers (3) by the relevant support and movement system (4), wherein said means (5) for applying said labels (2) comprise a column of shuttles (20) for each column of containers (3), configured in such a way to be wound by the relevant label (2) when said supply means (12)

have supplied a label (2) on the same, support and pushing means (26) for said label (2), and motion means (28, 29) for moving said pushing means (26) with respect to said shuttle (20) to apply said label (2) on said container (3), said motion means (28, 29) being so configured to bring said application means (5) from a rest position, wherein said label (2) winds said shuttle (20) and is supported by said support and pushing means (26), to an application position, wherein said label (2) winds said container (3) and is supported by said support and pushing means (26), and
wherein said motion means of said application means (5) comprise a cam (28) - roll (29) assembly, wherein said cam (28) is fixed with respect to the resting plane of the machine and said roll (29) is integral with said pushing means (26).

2. Machine (1) according to the previous claim, **characterized in that** said support and movement system (4) for said containers (3) comprises a plurality of support elements (9, 35) comprising a plurality of cavities (10, 11, 18) that can support at least a column of containers (3) in an upright position and provided as a grid, i.e. spaced each other, and placed along parallel lines and columns.

3. Machine (1) according to the previous claim, **characterized in that** said support elements are plates (9), preferably comprised of rigid material, and so shaped to have a plurality of holes (10, 11) for housing, from above, each container (3).

4. Machine (1) according to claim 2, **characterized in that** said support elements are transverse elements (35), parallel each other and provided transversely with respect to the linear advancement direction (A) of the machine (1), said transverse elements (35) being spaced each other so as to create a cavity (18) to house a line of containers (3).

5. Machine (1) according to claim 2, **characterized in that** said support elements are comprised of mats made up of flexible material shaped to have a plurality of holes for housing, from above, each one of said containers.

6. Machine (1) according to one of the preceding claims 2 - 5, **characterized in that** profile surface (17) of said plurality of cavities (10, 11, 18) has the lower portion blunt, preferably with a 45° angle.

7. Machine (1) according to any one of the previous claims, **characterized in that** said application means (5) comprise two transverse support elements (23, 24), transversely provided with respect to the linear advancement direction (A), one above the other, each shuttle (20) being integral with said upper support transverse element (23), said pushing means (26) being integrally coupled with the lower support transverse element (24), said motion means (28, 29) being able to cause the displacement of the lower support transverse element (24) with respect to the upper support transverse element (23) to cause the displacement upward of said label (2) with respect to the container (3) to apply the label (2) from the bottom on the same moving container (3).

8. Machine (1) according to the previous claim, **characterized in that** said application means (5) further comprise connection means (25) between said transverse support elements (23, 24).

9. Machine (1) according to one of the preceding claims 7 or 8, **characterized in that** said application means (5) further comprise return means (30) between said transverse support elements (23, 24) in said rest position.

10. Machine (1) according to any one of the previous claims 7 - 9, **characterized in that** said roll (29) is integral with said lower transverse support element (24).

11. Machine (1) according to one of the preceding claims, **characterized in that** said heating means can comprise pre-heating means (7) for partial shrinking of said labels (2) on said containers (3), and heating means (8), downward said pre-heating means (7), for full shrinking said labels (2) on said containers (3).

12. Machine (1) according to the previous claim, **characterized in that** said pre-heating means (7) comprise a pair of lateral hollow diffusers (31) , placed according to a longitudinal direction with respect to the linear advancement direction (A), laterally with respect to each one at least one column of containers (3), so as to be aside said containers (3) when the same are transported through said pre-heating means (7), said lateral hollow diffusers (31) being provided with a longitudinal slot (32), said slot (32) being placed so as to be in correspondence of a portion of said containers (3) and being connected with a conduct (33) for passage of a fluid through said slot (32) to activate partial heat-shrinking of said labels (2) on said portion of said containers (3).

13. Machine (1) according to the previous claim, **characterized in that**, when said machine (1) provides two or more columns of containers (3), said pre-heating means (7) comprise a pair of lateral diffusers (31) for each column of containers (3), each pair of lateral

diffusers (31) being offset, so that partial heat-shrinking of a column of containers (3) occurs before heat-shrinking of the adjacent column.

14. Machine (1) according to one of the preceding claims, **characterized in that** said heating means comprise full heating means (8), including a channel longitudinal (40) with respect to the linear advancement direction (A), for each column of containers (3), said longitudinal channel (40) being connected to a fluid conduct (41) and comprising a chamber (42) with two outlet openings (44) for fluid suitable to direct said fluid according to the direction of the walls (45) of said longitudinal channel (40) for a uniform distribution of said fluid within said channel (40) and to activate full heat-shrinking of said label (2) on said container (3).

15. Machine (1) according to the previous claim, **characterized in that** said walls (45) of said at least one longitudinal channel (40) comprise a portion so shaped to deviate flow of the fluid toward a portion of said container (3) and of said label (2).

16. Machine (1) according to one of the preceding claims, **characterized in that** said heating means (7, 8) comprise a suction hood (34, 47).

17. Machine (1) according to one of the preceding claims, **characterized in that** said means (12) for supplying said labels (2) are provided along the linear advancement direction (A) of said containers (3).

18. Machine (1) according to one of the preceding claims 1 - 17, **characterized in that** said label (2) supply means (12) are provided laterally with respect to the linear advancement direction (A) of said containers (3) and **in that** said application means (5) make a diagonal translational motion in order to be supplied with said labels (2) in correspondence of said supply means (12) and in order to be in correspondence of said containers (3) to permit application from the bottom of said labels (2) on said containers (3).

19. Process for applying shrink sleeve labels (2) on at least a column of containers (3) provided one after the other along a linear advancement direction (A) by means of the machine according to claims 1 - 18, said process providing the following steps:

- supplying said labels (2) to the means (5) for continuous application of the same labels (2) on every container (3);
- continuously moving by the advancement means (6) said application means (5) of said labels (2) along said linear advancement direction (A);
- supplying from above each container (3) on the support and motion system (4);
- continuously moving by said support and motion system (4) at least one column of containers (3) along said linear advancement direction (A);
- continuously moving said sleeve label (2) application means (5) by said advancement means (6) so as to bring one of said labels (2) in correspondence of one of said containers (3);
- causing displacement upward of said label (2) with respect to the relevant container (3) to apply the label (2) from the bottom on the same moving container (3);
- heating said sleeve labels (2) on said containers (3) by the heating means (7, 8) provided along said container (3) support and motion system (4), to obtain a partial or full heat-shrinking of said sleeve labels (2) when applied to the relevant container (3); and
- activating partial or full heat-shrinking of said labels (2) with respect to said containers (3) when said labels (2) are applied on said containers (3) during their continuous transportation of said containers (3) by the relevant support and motion system (4).

Patentansprüche

1. Maschine (1), die hergestellt ist, um Schrumpfhüllenetiketten (2) auf mindestens einer Spalte von Behältern (3), die nacheinander entlang einer linearen Vorlaufrichtung (A) bereitgestellt sind, anzulegen, wobei die Maschine (1) umfasst:

- Zuführmittel (12) zum Zuführen der Etiketten (2) zu Mitteln zum kontinuierlichen Anlegen dieser Etiketten (2) auf jedem Behälter (3);
- Mittel (5) zum kontinuierlichen Vorlaufen der Anlegemittel (5) des Etiketts (2) entlang der linearen Vorlaufrichtung (A);
- ein System (4) zum Tragen und kontinuierlichen Bewegen mindestens einer Spalte von Behältern (3) entlang der linearen Vorlaufrichtung (A), wobei jeder Behälter (3) von oben auf dem Trag- und Bewegungssystem (4) zugeführt wird;
- Heizmittel (7, 8) für die Hüllenetiketten (2), die entlang des Trag- und Bewegungssystems (4) der Behälter (3) bereitgestellt sind, um ein teilweises oder vollständiges Schrumpfen der Hüllenetiketten (2), wenn sie auf dem relevanten Behälter (3) angelegt sind, zu erhalten;

wobei sich die Mittel (5) zum Anlegen der Hüllenetiketten (2) durch das Vorlaufmittel (6) derart bewegen, dass eines der Etiketten (2) in Übereinstimmung mit einem der Behälter (3) gebracht wird, und derart konfiguriert ist, dass die Verlagerung nach oben

des Etiketts (2) in Bezug auf den relevanten Behälter (3) bewirkt wird, um das Etikett (2) von unten auf demselben sich kontinuierlich bewegenden Behälter (3) anzulegen; und
wobei die Heizmittel (7, 8) dazu konfiguriert sind, das teilweise oder vollständige Schrumpfen der Etiketten (2) in Bezug auf die Behälter (3) zu aktivieren, wenn die Etiketten (2) auf den Behältern (3) während des kontinuierlichen Transports der Behälter (3) von dem relevanten Trag- und Bewegungssystem (4) angelegt werden,
wobei die Mittel (5) zum Anlegen der Etiketten (2) eine Spalte aus Pendelelementen (20) für jede Spalte von Behältern (3) umfassen, die derart konfiguriert sind, dass sie von dem relevanten Etikett (2) umwickelt werden, wenn die Zuführmittel (12) ein Etikett (2) auf diesem Trag- und Schiebemittel (26) für das Etikett (2) zugeführt haben, und Bewegungsmittel (28, 29) zum Bewegen der Schiebemittel (26) in Bezug auf das Pendelelement (20), um das Etikett (2) auf dem Behälter (3) anzulegen, wobei die Bewegungsmittel (28, 29) derart konfiguriert sind, dass sie die Anlegemittel (5) von einer Ruheposition, in der sich das Etikett (2) um das Pendelelement (20) wickelt und von dem Trag- und Schiebemittel (26) getragen wird, zu einer Anlegeposition zu bringen, wobei sich das Etikett (2) um den Behälter (3) wickelt und von dem Trag- und Schiebemittel (26) getragen wird, und
wobei die Bewegungsmittel der Anlegemittel (5) eine Anordnung aus Nocken (28) - Walze (29) umfassen, wobei der Nocken (28) in Bezug auf die Ruheebene der Maschine feststeht, und die Walze (29) mit dem Schiebemittel (26) integral ist.

2. Maschine (1) nach dem vorstehenden Anspruch, **dadurch gekennzeichnet, dass** das Trag- und Bewegungssystem (4) für die Behälter (3) eine Vielzahl von Tragelementen (9, 35) umfasst, die eine Vielzahl von Hohlräumen (10, 11, 18) umfassen, die mindestens eine Spalte von Behältern (3) in einer aufrechten Position tragen können und als ein Gitter bereitgestellt sind, das heißt voneinander beabstandet, und entlang paralleler Linien und Spalten platziert sind.

3. Maschine (1) nach dem vorstehenden Anspruch, **dadurch gekennzeichnet, dass** die Tragelemente Platten (9) sind, die bevorzugt aus starrem Material bestehen und derart geformt sind, dass sie eine Vielzahl von Löchern (10, 11) zum Aufnehmen von oben jedes Behälters (3) aufweisen.

4. Maschine (1) nach Anspruch 2, **dadurch gekennzeichnet, dass** die Tragelemente Querelemente (35) sind, die zueinander parallel sind und quer in Bezug auf die lineare Vorlaufrichtung (A) der Maschine (1) bereitgestellt sind, wobei die Querelemente (35) derart voneinander beabstandet sind, dass sie einen Hohlraum (18) schaffen, um eine Reihe von Behältern (3) aufzunehmen.

5. Maschine (1) nach Anspruch 2, **dadurch gekennzeichnet, dass** die Tragelemente aus Matten bestehen, die aus einem biegsamen Material hergestellt sind, das geformt ist, um eine Vielzahl von Löchern zum Aufnehmen von oben jedes der Behälter aufzuweisen.

6. Maschine (1) nach einem der vorstehenden Ansprüche 2 bis 5, **dadurch gekennzeichnet, dass** die Profiloberfläche (17) der Vielzahl von Hohlräumen (10, 11, 18) den unteren Abschnitt stumpf, bevorzugt mit einem Winkel von 45°, aufweist.

7. Maschine (1) nach einem der vorstehenden Ansprüche, **dadurch gekennzeichnet, dass** die Anlegemittel (5) zwei Tragquerelemente (23, 24) umfassen, die quer in Bezug auf die lineare Vorlaufrichtung (A) eines über dem anderen bereitgestellt sind, wobei jedes Pendelelement (20) mit dem oberen Tragquerelement (23) einstückig ist, wobei das Schiebemittel (26) integral mit dem unteren Tragquerelement (24) gekoppelt ist, wobei die Bewegungsmittel (28, 29) in der Lage sind, die Verlagerung des unteren Tragquerelements (24) in Bezug auf das obere Tragquerelement (23) zu bewirken, um die Verlagerung nach oben des Etiketts (2) in Bezug auf den Behälter (3) zu bewirken, um das Etikett (2) von unten auf diesen sich bewegenden Behälter (3) anzulegen.

8. Maschine (1) nach dem vorstehenden Anspruch, **dadurch gekennzeichnet, dass** die Anlegemittel (5) weiter Verbindungsmittel (25) zwischen den Tragquerelementen (23, 24) umfassen.

9. Maschine (1) nach einem der vorstehenden Ansprüche 7 oder 8, **dadurch gekennzeichnet, dass** die Anlegemittel (5) weiter Wendemittel (30) zwischen den Tragquerelementen (23, 24) in der Ruheposition umfassen.

10. Maschine (1) nach einem der vorstehenden Ansprüche 7 bis 9, **dadurch gekennzeichnet, dass** die Walze (29) mit dem unteren Tragquerelement (24) integral ist.

11. Maschine (1) nach einem der vorstehenden Ansprüche, **dadurch gekennzeichnet, dass** die Heizmittel Vorheizmittel (7) zum teilweisen Schrumpfen der Etiketten (2) auf den Behältern (3) umfassen können,

und Heizmittel (8) unterhalb der Vorheizmittel (7), um die Etiketten (2) auf den Behältern (3) vollständig zu schrumpfen.

12. Maschine (1) nach dem vorstehenden Anspruch, **dadurch gekennzeichnet, dass** die Vorheizmittel (7) ein Paar seitlicher hohler Diffusoren (31) umfassen, die gemäß einer Längsrichtung in Bezug auf die lineare Vorlaufrichtung (A) seitlich in Bezug auf jede mindestens eine Spalte von Behältern (3) platziert sind, um neben Behältern (3) zu sein, wenn diese durch die Vorheizmittel (7) transportiert werden, wobei die seitlichen hohlen Diffusoren (31) mit einem Längsschlitz (32) versehen sind, wobei der Schlitz (32) derart platziert ist, dass er mit einem Abschnitt der Behälter (3) übereinstimmt und mit einer Leitung (33) zum Durchgehen eines Fluids durch den Schlitz (32) verbunden ist, um teilweises Wärmeschrumpfen der Etiketten (2) auf dem Abschnitt der Behälter (3) zu aktivieren.

13. Maschine (1) nach dem vorstehenden Anspruch, **dadurch gekennzeichnet, dass**, wenn die Maschine (1) zwei oder mehrere Spalten von Behältern (3) bereitstellt, die Vorheizmittel (7) ein Paar seitlicher Diffusoren (31) für jede Spalte von Behältern (3) umfassen, wobei jedes Paar seitlicher Diffusoren (31) derart versetzt ist, dass teilweises Wärmeschrumpfen einer Spalte von Behältern (3) vor dem Wärmeschrumpfen der angrenzenden Spalte auftritt.

14. Maschine (1) nach einem der vorstehenden Ansprüche, **dadurch gekennzeichnet, dass** die Heizmittel vollständige Heizmittel (8) umfassen, die einen Längskanal (40) in Bezug auf die lineare Vorlaufrichtung (A) für jede Spalte von Behältern (3) beinhalten, wobei der Längskanal (40) mit einer Fluidleitung (41) verbunden ist und eine Kammer (42) mit zwei Auslassöffnungen (44) für Fluid umfasst, die geeignet sind, um das Fluid gemäß der Richtung der Wände (45) des Längskanals (40) für eine gleichmäßige Verteilung des Fluids innerhalb des Kanals (40) zu lenken, um das vollständige Wärmeschrumpfen der Etiketten (2) auf dem Behälter (3) zu aktivieren.

15. Maschine (1) nach dem vorstehenden Anspruch, **dadurch gekennzeichnet, dass** die Wände (45) des mindestens einen Längskanals (40) einen Abschnitt umfassen, der derart geformt ist, dass er Fluss des Fluids zu einem Abschnitt des Behälters (3) und des Etikett (2) ablenkt.

16. Maschine (1) nach einem der vorstehenden Ansprüche, **dadurch gekennzeichnet, dass** die Heizmittel (7, 8) eine Ansaughaube (34, 47) umfassen.

17. Maschine (1) nach einem der vorstehenden Ansprüche, **dadurch gekennzeichnet, dass** die Mittel (12) zum Zuführen der Etiketten (2) entlang der linearen Vorlaufrichtung (A) der Behälter (3) bereitgestellt sind.

18. Maschine (1) nach einem der vorstehenden Ansprüche 1 bis 17, **dadurch gekennzeichnet, dass** die Zuführmittel (12) eines Etiketts (2) seitlich in Bezug auf die lineare Vorlaufrichtung (A) der Behälter (3) bereitgestellt sind, und dass die Anlegemittel (5) eine diagonale Verlagerungsbewegung ausführen, um mit den Etiketten (2) in Übereinstimmung mit dem Zuführmittel (12) zugeführt zu werden, und um mit den Behältern (3) übereinzustimmen, um Anlegen von unten der Etiketten (2) auf den Behältern (3) zu erlauben.

19. Prozess zum Anlegen von Schrumpfhüllenetiketten (2) auf mindestens einer Spalte von Behältern (3), die nacheinander entlang einer linearen Vorlaufrichtung (A) mittels der Maschine nach den Ansprüchen 1 bis 18 bereitgestellt werden, wobei der Prozess die folgenden Schritte bereitstellt:

- Zuführen der Etiketten (2) zu den Mitteln (5) zum kontinuierlichen Anlegen dieser Etiketten (2) auf jedem Behälter (3);
- kontinuierliches Bewegen der Anlegemittel (5) der Etiketten (2) durch die Vorlaufmittel (6) entlang der linearen Vorlaufrichtung (A);
- Zuführen von oben jedes Behälters (3) auf dem Trag- und Bewegungssystem (4);
- kontinuierliches Bewegen durch das Trag- und Bewegungssystem (4) mindestens einer Spalte von Behältern (3) entlang der linearen Vorlaufrichtung (A);
- kontinuierliches Bewegen der Anlegemittel (5) des Hüllenetiketts (2) durch das Vorlaufmittel (6) derart, dass eines dieser Etiketten (2) in Übereinstimmung mit einem der Behälter (3) gebracht wird;
- Bewirken der Verlagerung nach oben des Etiketts (2) in Bezug auf den relevanten Behälter (3), um das Etikett (2) von unten auf demselben sich bewegenden Behälter (3) anzulegen;
- Erhitzen der Hüllenetiketten (2) auf den Behältern (3) durch die Heizmittel (7, 8), die entlang des Trag- und Bewegungssystems (4) der Behälter (3) bereitgestellt sind, um ein teilweises oder vollständiges Wärmeschrumpfen der Hüllenetiketten (2), wenn sie an den relevanten Behälter (3) angelegt sind, zu erhalten; und
- Aktivieren des teilweisen oder vollständigen Wärmeschrumpfens der Etiketten (2) in Bezug auf die Behälter (3), wenn die Etiketten (2) auf den Behältern (3) während ihres kontinuierlichen Transports der Behälter (3) von dem relevanten Trag- und Bewegungssystem (4) angelegt werden.

Revendications

1. Machine (1) réalisée pour appliquer des étiquettes-manchons (2) rétractables sur au moins une colonne de contenants (3) prévus les uns après les autres le long d'une direction d'avancement linéaire (A), ladite machine (1) comprenant :

- des moyens d'alimentation (12) pour l'alimentation en dites étiquettes (2) des moyens pour l'application continue des mêmes étiquettes (2) sur chaque contenant (3) ;
- des moyens (5) pour l'avancement continu desdits moyens d'application (5) d'étiquette (2) le long de ladite direction d'avancement linéaire (A) ;
- un système (4) pour le support et le déplacement continu d'au moins une colonne de contenants (3) le long de ladite direction d'avancement linéaire (A), chaque contenant (3) étant alimenté depuis le dessus sur ledit système de support et de déplacement (4) ;
- des moyens de chauffage (7, 8) pour lesdites étiquettes de manchon (2), prévus le long dudit système de support et de déplacement (4) desdits contenants (3), pour obtenir un rétrécissement partiel ou complet desdites étiquettes-manchons (2) lorsqu'elles sont appliquées sur le contenant pertinent (3) ;

lesdits moyens (5) pour l'application desdites étiquettes-manchons (2) se déplaçant par lesdits moyens d'avancement (6) de sorte à amener une desdites étiquettes (2) en correspondance d'un desdits contenants (3) et étant configurés pour provoquer le déplacement vers le haut de ladite étiquette (2) par rapport au contenant pertinent (3) pour appliquer l'étiquette (2) du dessous sur le même contenant se déplaçant en continu (3) ; et
lesdits moyens de chauffage (7, 8) étant configurés de sorte à activer le rétrécissement partiel ou complet desdites étiquettes (2) par rapport auxdits contenants (3) lorsque lesdites étiquettes (2) sont appliquées sur lesdits contenants (3) pendant le transport continu desdits contenants (3) par ledit système de support et de déplacement pertinent (4),
dans laquelle lesdits moyens (5) pour l'application desdites étiquettes (2) comprennent une colonne de navettes (20) pour chaque colonne de contenants (3), configurée de manière à être enroulée par l'étiquette pertinente (2) lorsque lesdits moyens d'alimentation (12) ont alimenté une étiquette (2) sur les mêmes moyens de support et de poussée (26) pour ladite étiquette (2), et
des moyens de mouvement (28, 29) pour le mouvement desdits moyens de poussée (26) par rapport à ladite navette (20) pour appliquer ladite étiquette (2) sur ledit contenant (3), lesdits moyens de mouvement (28, 29) étant configurés de sorte à amener lesdits moyens d'application (5) d'une position de repos, dans laquelle ladite étiquette (2) enroule ladite navette (20) et est supportée par lesdits moyens de support et de poussée (26), dans une position d'application, dans laquelle ladite étiquette (2) enroule ledit contenant (3) et est supportée par lesdits moyens de support et de poussée (26), et
dans laquelle lesdits moyens de mouvement desdits moyens d'application (5) comprennent un ensemble de came (28)-rouleau (29), dans laquelle ladite came (28) est fixée par rapport au plan restant de la machine et ledit rouleau (29) est d'un seul tenant avec lesdits moyens de poussée (26).

2. Machine (1) selon la revendication précédente, **caractérisée en ce que** ledit système de support et de mouvement (4) pour lesdits contenants (3) comprend une pluralité d'éléments de support (9, 35) comprenant une pluralité de cavités (10, 11, 18) qui peut supporter au moins une colonne de contenants (3) dans une position verticale et prévues comme une grille, c'est-à-dire espacées les unes des autres, et placées le long de lignes et colonnes parallèles.

3. Machine (1) selon la revendication précédente, **caractérisée en ce que** lesdits éléments de support sont des plaques (9), de préférence composées de matériau rigide, et formées de sorte à présenter une pluralité de trous (10, 11) pour le logement, de dessus, de chaque contenant (3).

4. Machine (1) selon la revendication 2, **caractérisée en ce que** lesdits éléments de support sont des éléments transversaux (35), parallèles les uns aux autres et prévus transversalement par rapport à la direction d'avancement linéaire (A) de la machine (1), lesdits éléments transversaux (35) étant espacés les uns des autres de sorte à créer une cavité (18) pour loger une ligne de contenants (3).

5. Machine (1) selon la revendication 2, **caractérisée en ce que** lesdits éléments de support sont composés de tapis réalisés en matériau flexible formé pour présenter une pluralité de trous pour le logement, de dessus, de chacun desdits contenants.

6. Machine (1) selon l'une des revendications précédentes 2 à 5, **caractérisée en ce que** la surface de

profil (17) de ladite pluralité de cavités (10, 11, 18) présente la portion inférieure émoussée, de préférence avec un angle de 45°.

7. Machine (1) selon l'une quelconque des revendications précédentes, **caractérisée en ce que** lesdits moyens d'application (5) comprennent deux éléments de support transversaux (23, 24), transversalement prévus par rapport à la direction d'avancement linéaire (A), un au-dessus de l'autre, chaque navette (20) étant d'un seul tenant avec ledit élément transversal de support supérieur (23), lesdits moyens de poussée (26) étant couplés d'un seul tenant avec l'élément transversal de support inférieur (24), lesdits moyens de mouvement (28, 29) étant capables de provoquer le déplacement de l'élément transversal de support inférieur (24) par rapport à l'élément transversal de support supérieur (23) pour provoquer le déplacement vers le haut de ladite étiquette (2) par rapport au contenant (3) pour appliquer l'étiquette (2) de dessous sur le même contenant mobile (3).

8. Machine (1) selon la revendication précédente, **caractérisée en ce que** lesdits moyens d'application (5) comprennent en outre des moyens de connexion (25) entre lesdits éléments de support transversaux (23, 24).

9. Machine (1) selon l'une des revendications précédentes 7 ou 8, **caractérisée en ce que** lesdits moyens d'application (5) comprennent en outre des moyens de rappel (30) entre lesdits éléments de support transversaux (23, 24) dans ladite position de repos.

10. Machine (1) selon l'une quelconque des revendications précédentes 7 à 9, **caractérisée en ce que** ledit rouleau (29) est d'un seul tenant avec ledit élément de support transversal inférieur (24).

11. Machine (1) selon l'une des revendications précédentes, **caractérisée en ce que** lesdits moyens de chauffage peuvent comprendre des moyens de préchauffage (7) pour le rétrécissement partiel desdites étiquettes (2) sur lesdits contenants (3), et des moyens de chauffage (8), vers le bas desdits moyens de préchauffage (7), pour le rétrécissement complet desdites étiquettes (2) sur lesdits contenants (3).

12. Machine (1) selon la revendication précédente, **caractérisée en ce que** lesdits moyens de préchauffage (7) comprennent une paire de diffuseurs creux latéraux (31), placés selon une direction longitudinale par rapport à la direction d'avancement linéaire (A), latéralement par rapport à chaque au moins une colonne de contenants (3) de sorte à être de côté desdits contenants (3) lorsque ceux-ci sont transportés à travers lesdits moyens de préchauffage (7), lesdits diffuseurs creux latéraux (31) étant dotés d'une fente longitudinale (32), ladite fente (32) étant placée de sorte à être en correspondance d'une portion desdits contenants (3) et étant reliée à un conduit (33) pour le passage d'un fluide à travers ladite fente (32) pour activer le rétrécissement thermique partiel desdites étiquettes (2) sur ladite portion desdits contenants (3).

13. Machine (1) selon la revendication précédente, **caractérisée en ce que**, lorsque ladite machine (1) fournit deux ou plus colonnes de contenants (3), lesdits moyens de préchauffage (7) comprennent une paire de diffuseurs latéraux (31) pour chaque colonne de contenants (3), chaque paire de diffuseurs latéraux (31) étant décalée de sorte que le rétrécissement thermique partiel d'une colonne de contenants (3) se produise avant le rétrécissement thermique de la colonne adjacente.

14. Machine (1) selon l'une des revendications précédentes, **caractérisée en ce que** lesdits moyens de chauffage comprennent des moyens de chauffage complets (8) comportant un canal longitudinal (40) par rapport à la direction d'avancement linéaire (A), pour chaque colonne de contenants (3), ledit canal longitudinal (40) étant relié à une conduite de fluide (41) et comprenant une chambre (42) avec deux ouvertures de sortie (44) pour du fluide adaptées pour diriger ledit fluide selon la direction des parois (45) dudit canal longitudinal (40) pour une distribution uniforme dudit fluide dans ledit canal (40) et pour activer le rétrécissement thermique complet de ladite étiquette (2) sur ledit contenant (3).

15. Machine (1) selon la revendication précédente, **caractérisée en ce que** lesdites parois (45) dudit au moins un canal longitudinal (40) comprennent une portion ainsi formée pour dévier le flux du fluide vers une portion dudit contenant (3) et de ladite étiquette (2).

16. Machine (1) selon l'une des revendications précédentes, **caractérisée en ce que** lesdits moyens de chauffage (7, 8) comprennent une hotte aspirante (34, 47).

17. Machine (1) selon l'une des revendications précédentes, **caractérisée en ce que** lesdits moyens (12) pour l'alimentation desdites étiquettes (2) sont prévus le long de la direction d'avancement linéaire (A) desdits contenants (3).

18. Machine (1) selon l'une des revendications précédentes 1 à 17, **caractérisée en ce que** lesdits moyens d'alimentation (12) en étiquettes (2) sont

prévus latéralement par rapport à la direction d'avancement linéaire (A) desdits contenants (3) et **en ce que** lesdits moyens d'application (5) font un mouvement translationnel diagonal afin d'être alimentés en dites étiquettes (2) en correspondance desdits moyens d'alimentation (12) et afin d'être en correspondance desdits contenants (3) pour permettre l'application du dessous desdites étiquettes (2) sur lesdits contenants (3).

19. Procédé d'application d'étiquettes-manchons rétractables (2) sur au moins une colonne de contenants (3) prévues les unes après les autres le long d'une direction d'avancement linéaire (A) au moyen de la machine selon les revendications 1-18, ledit procédé fournissant les étapes suivantes :

- l'alimentation en lesdites étiquettes (2) desdits moyens (5) pour l'application continue des mêmes étiquettes (2) sur chaque contenant (3) ;
- le déplacement continu par les moyens d'avancement (6) desdits moyens d'application

(5) desdites étiquettes (2) le long de ladite direction d'avancement linéaire (A) ;

- l'alimentation de dessus de chaque contenant (3) sur le système de support et de mouvement (4) ;
- le déplacement continu par ledit système de support et de mouvement (4) d'au moins une colonne de contenants (3) le long de ladite direction d'avancement linéaire (A) ;
- le déplacement continu desdits moyens d'application (5) d'étiquettes-manchons (2) par lesdits moyens d'avancement (6) de sorte à amener une desdites étiquettes (2) en correspondance d'un desdits contenants (3) ;
- l'amenée du déplacement vers le haut de ladite étiquette (2) par rapport au contenant pertinent (3) à appliquer l'étiquette (2) de dessous sur le même contenant mobile (3) ;
- le chauffage desdites étiquettes-manchons (2) sur lesdits contenants (3) par les moyens de chauffage (7, 8) prévus le long dudit système de support et de mouvement (4) de contenant (3), pour obtenir un rétrécissement thermique partiel ou complet desdites étiquettes-manchons (2) lorsqu'elles sont appliquées sur le contenant pertinent (3) ; et
- l'activation du rétrécissement thermique partiel ou complet desdites étiquettes (2) par rapport auxdits contenants (3) lorsque lesdites étiquettes (2) sont appliquées sur lesdits contenants (3) pendant leur transport continu desdits contenants (3) par le système de support et mouvement (4) pertinent.

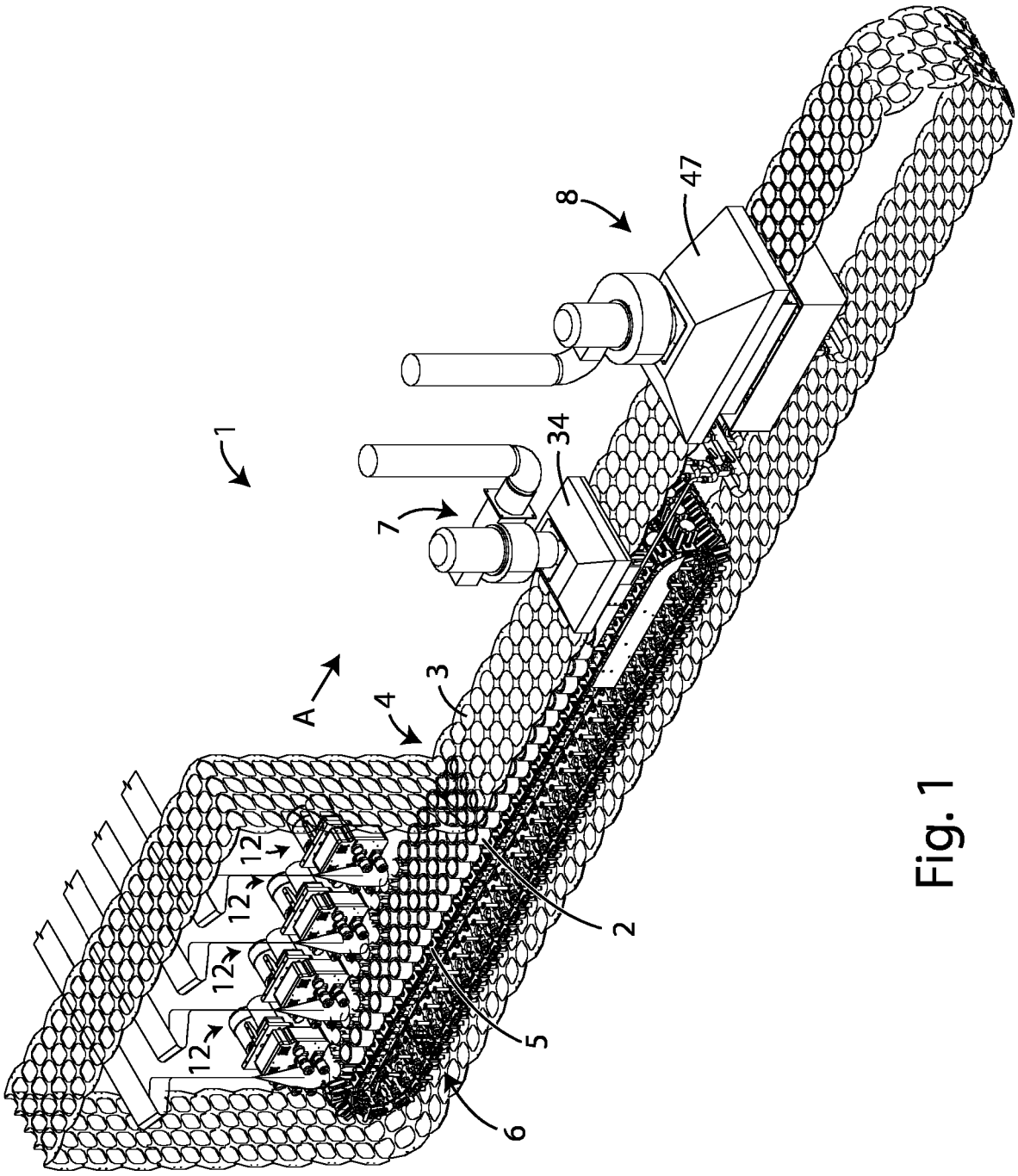

Fig. 1

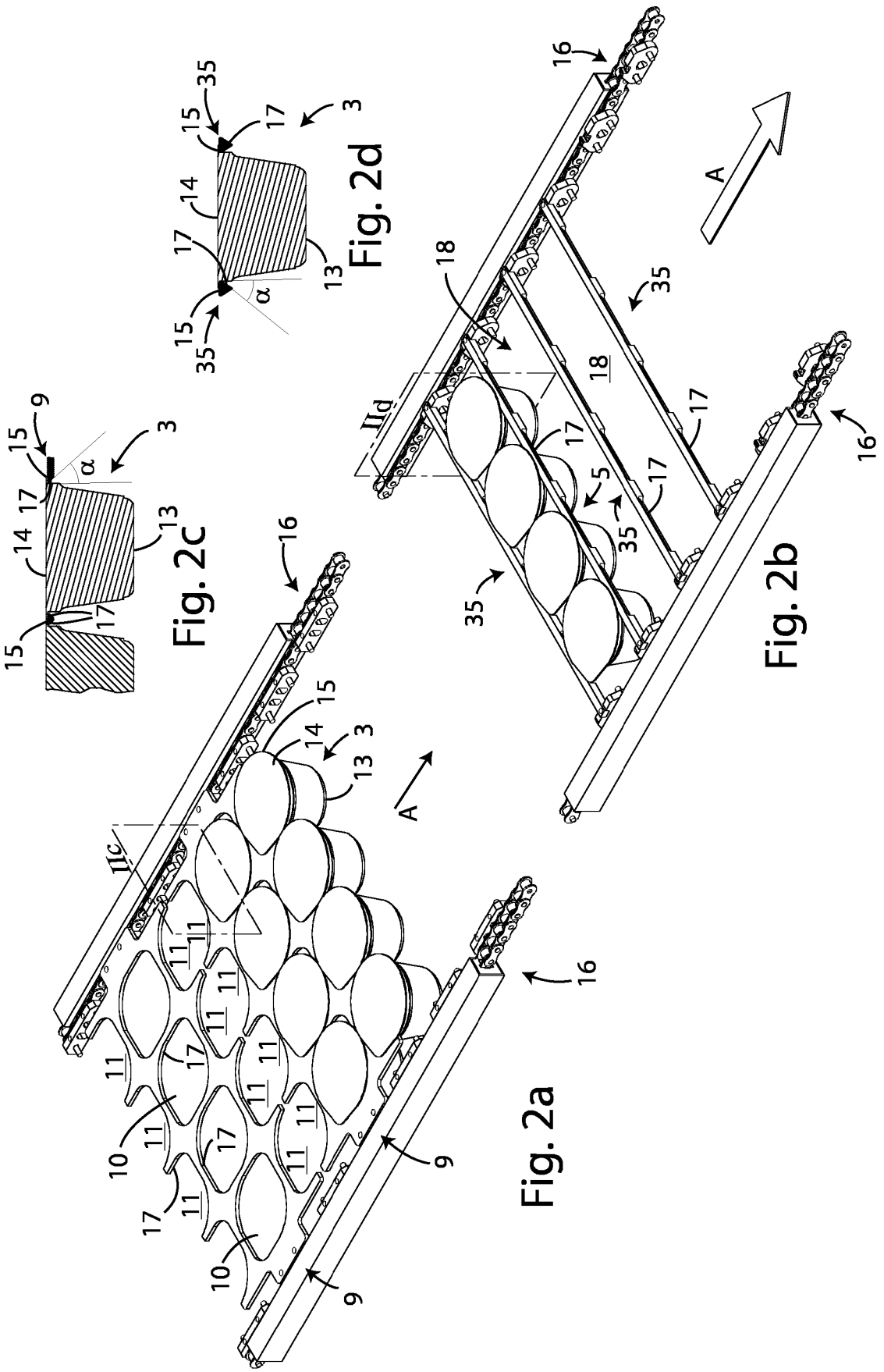
Fig. 2a
Fig. 2b
Fig. 2c
Fig. 2d
A
IIc
IId
α

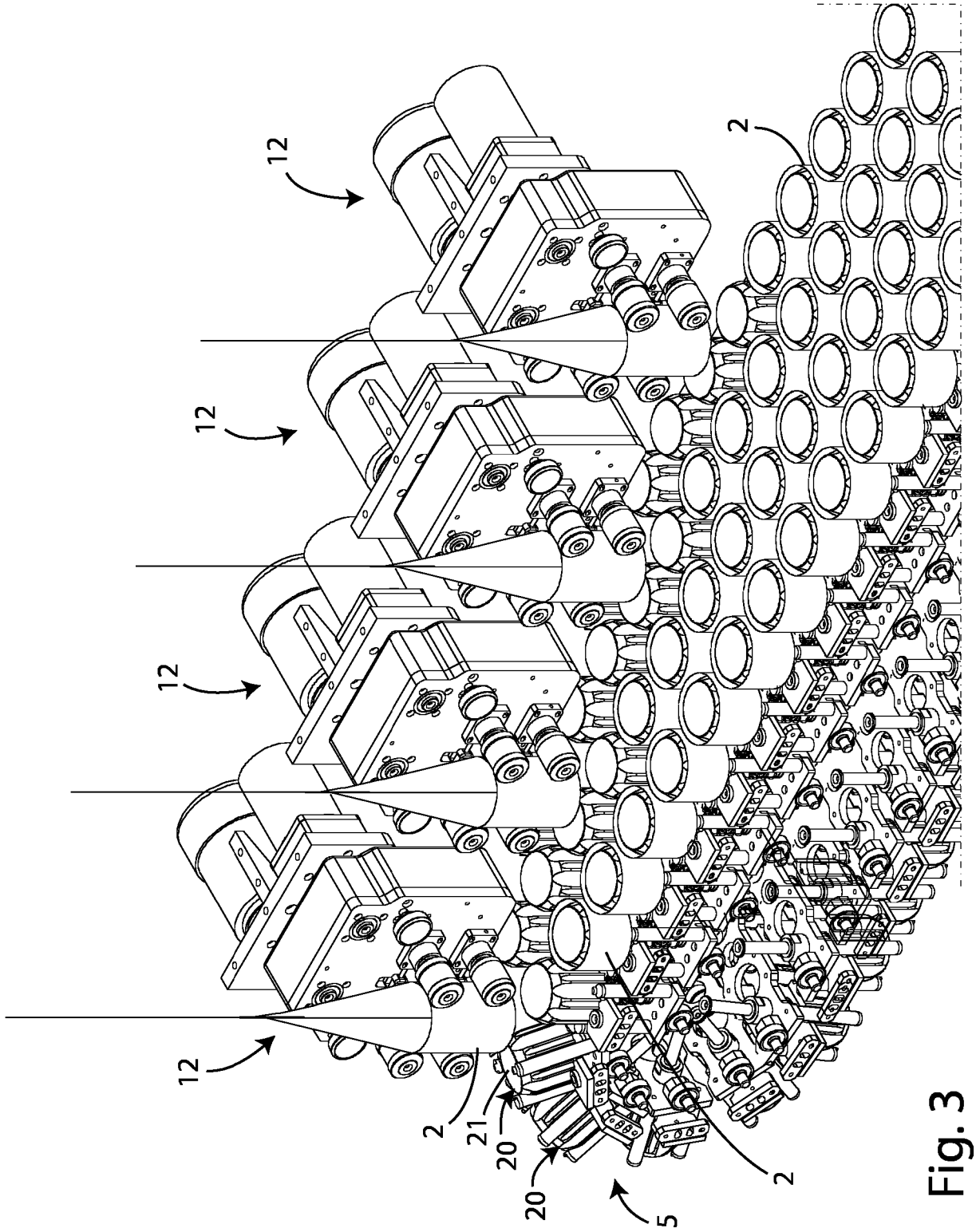

Fig. 3

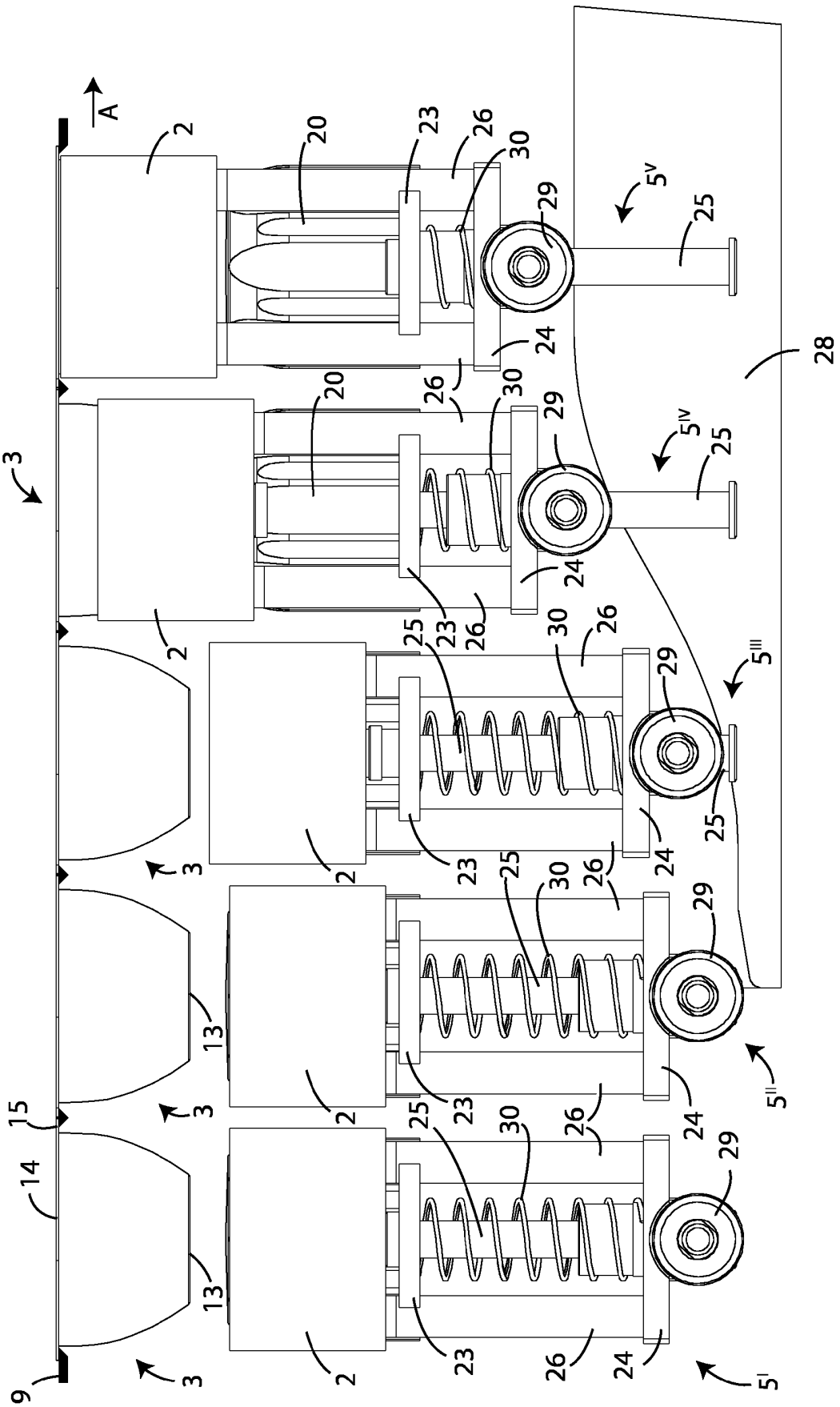

Fig. 4

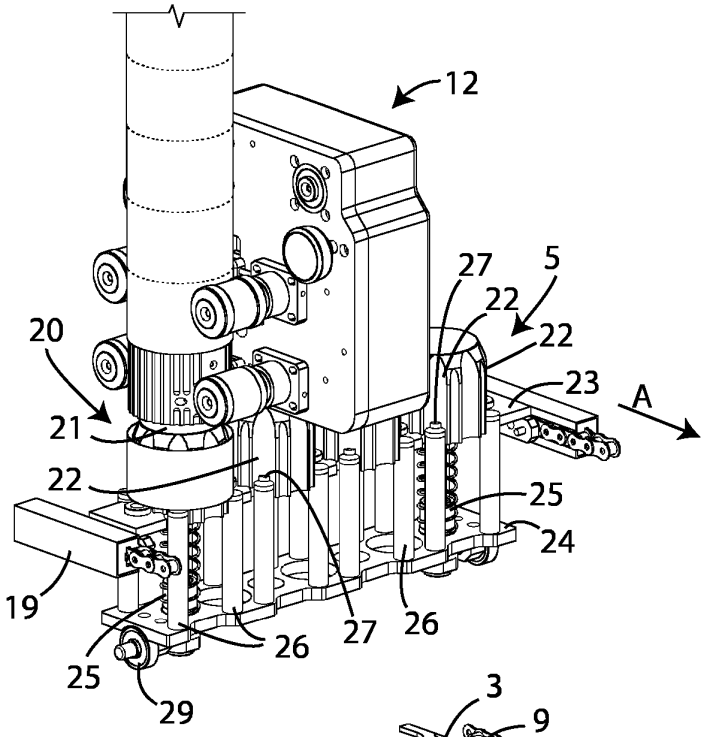

Fig. 5a

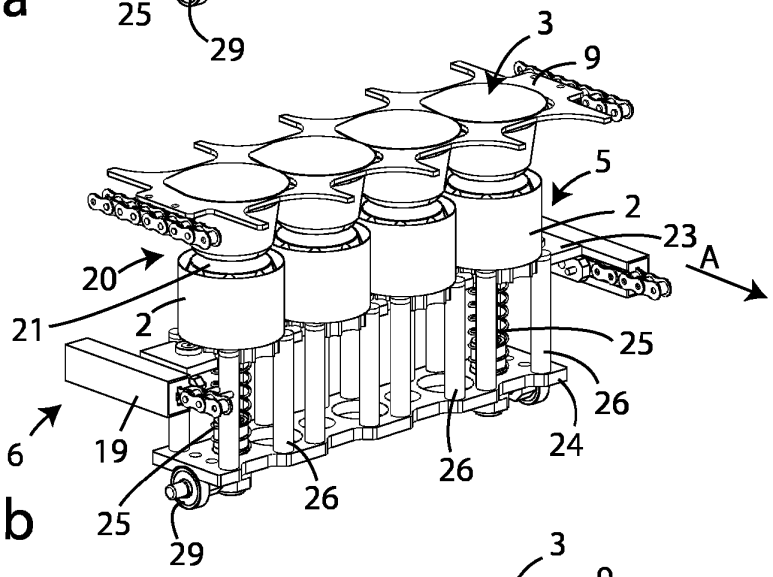

Fig. 5b

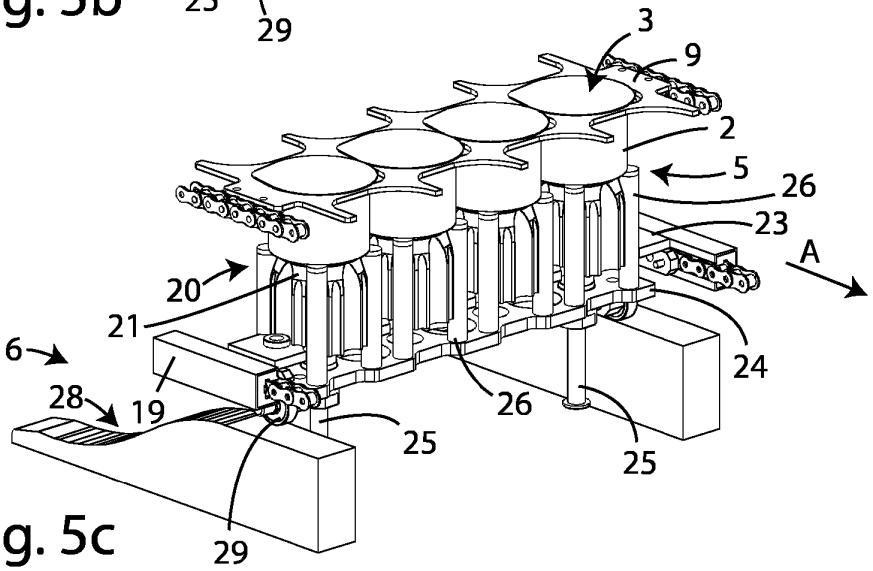

Fig. 5c

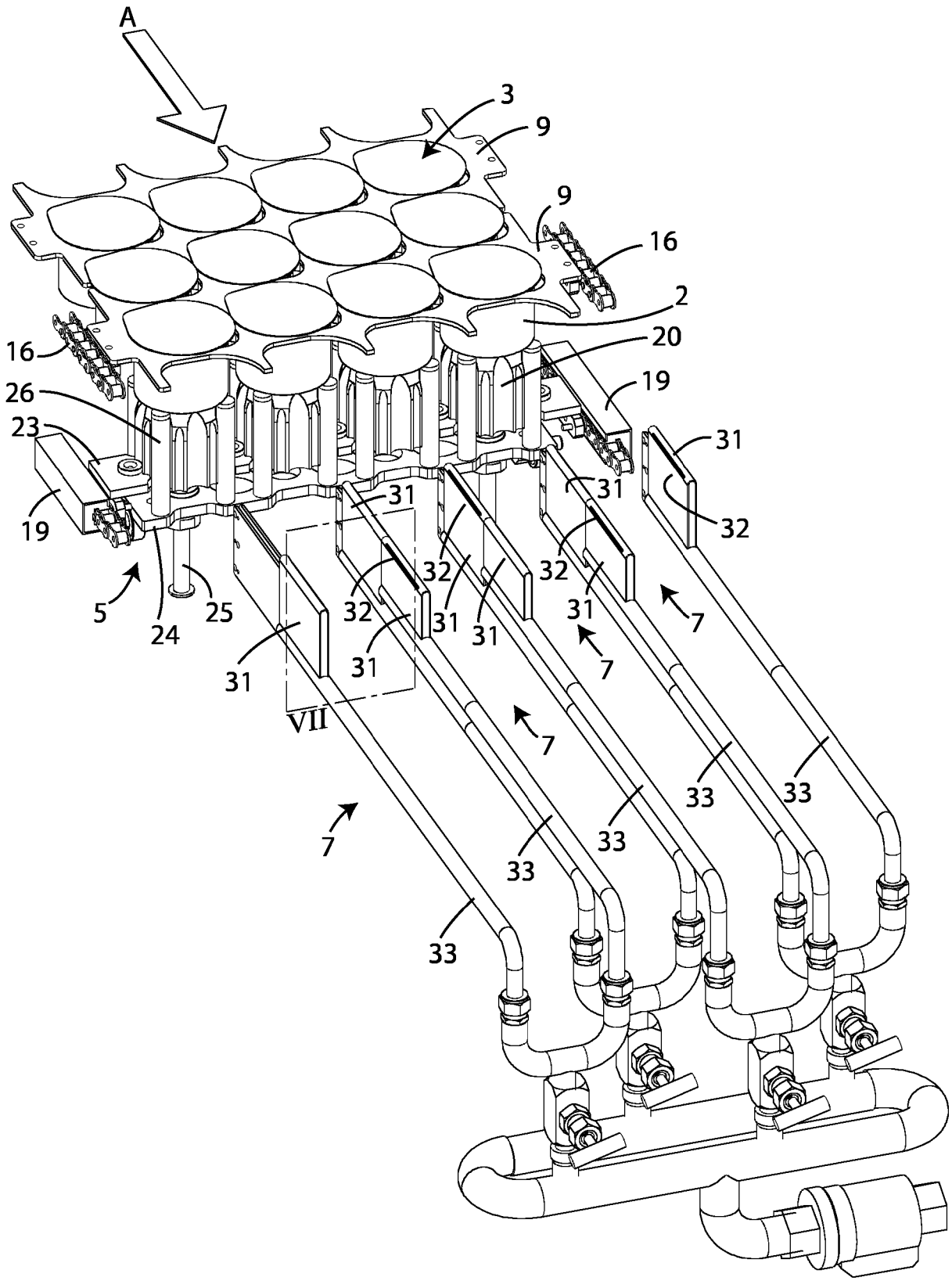
A
3
9
9
16
2
20
19
16
26
23
19
31
31
31
32
32
32
32
31
31
31
31
5
24
25
7
7
7
7
VII
33
33
33
33
33

Fig. 6

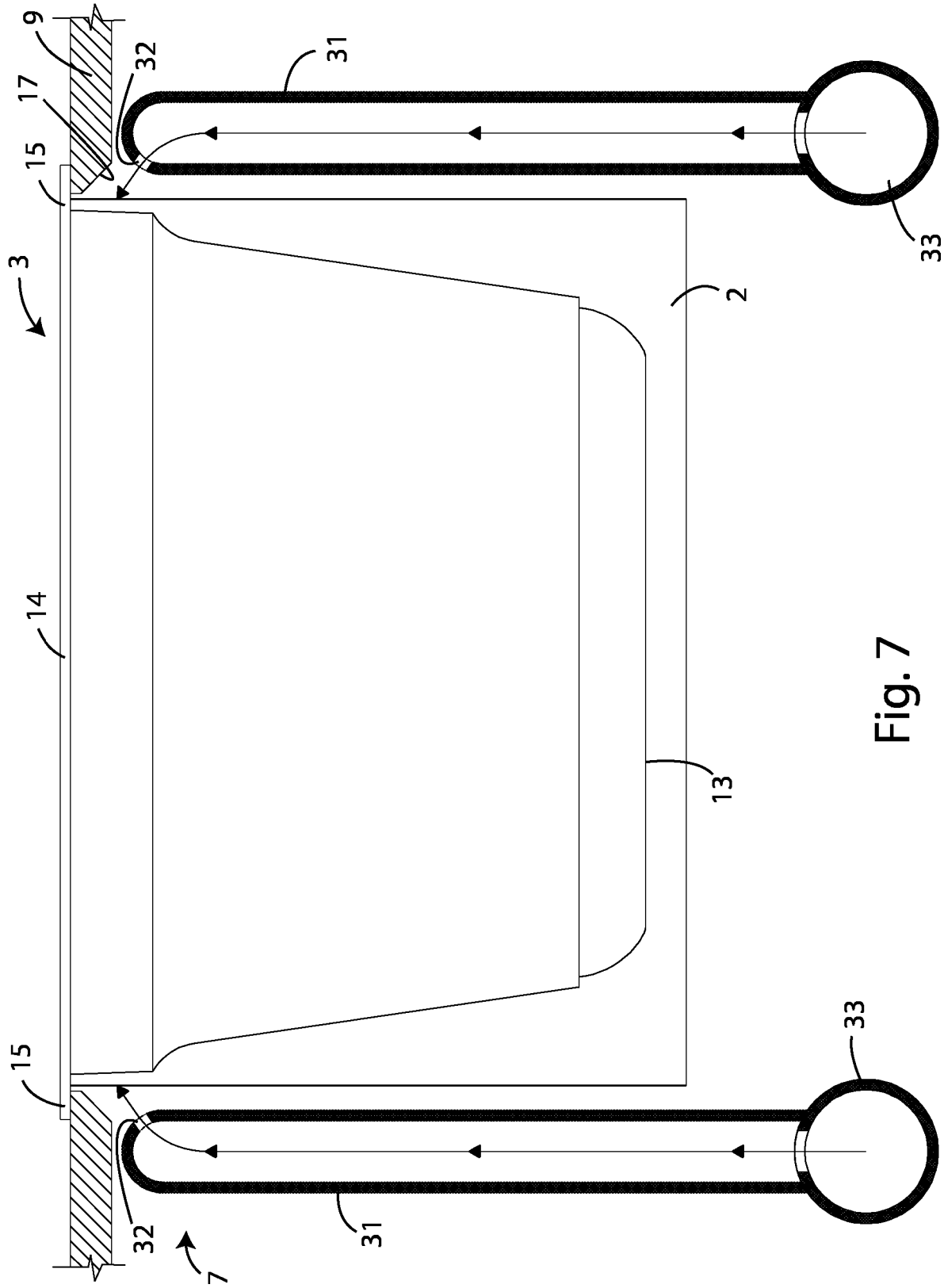

Fig. 7

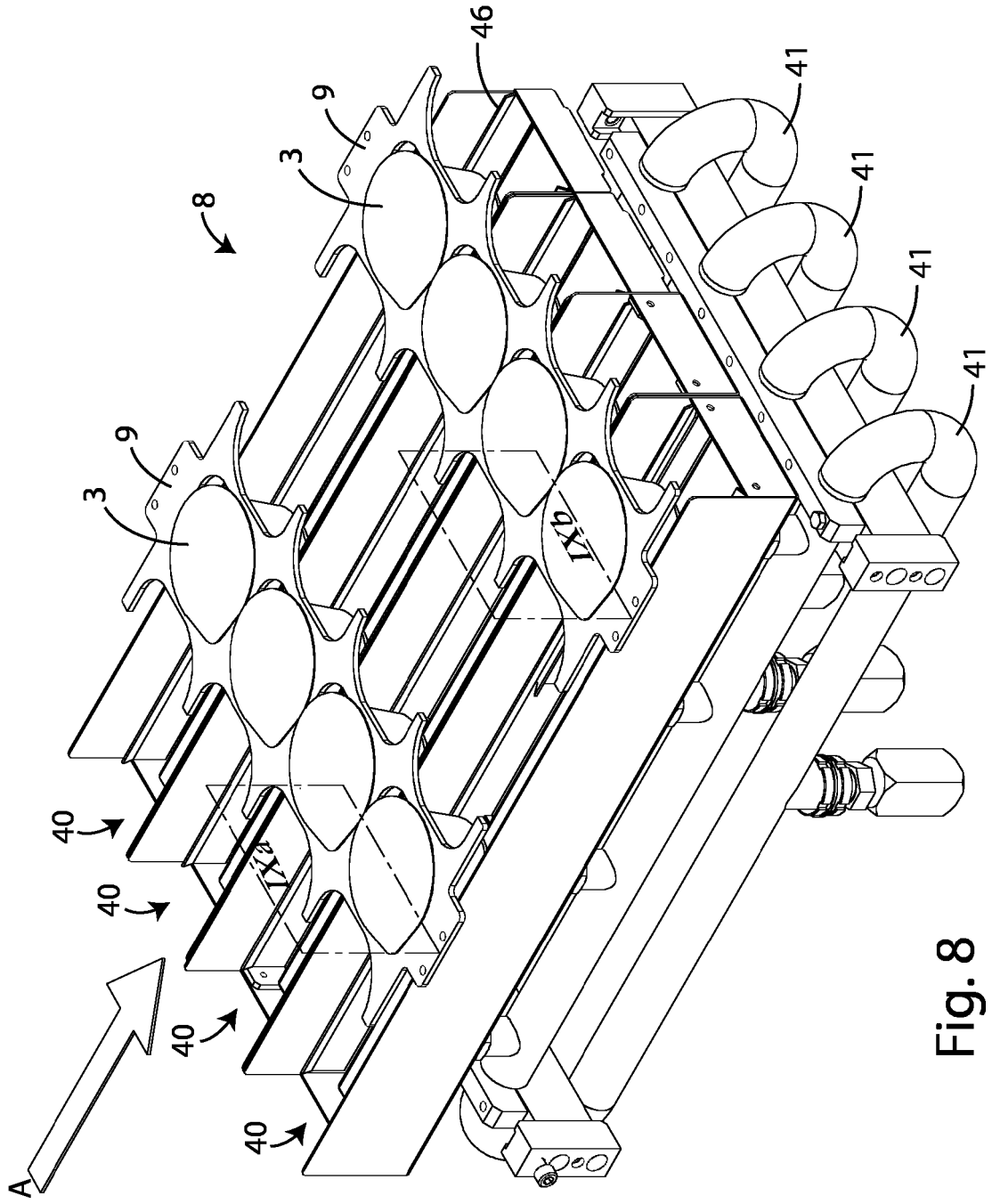

Fig. 8

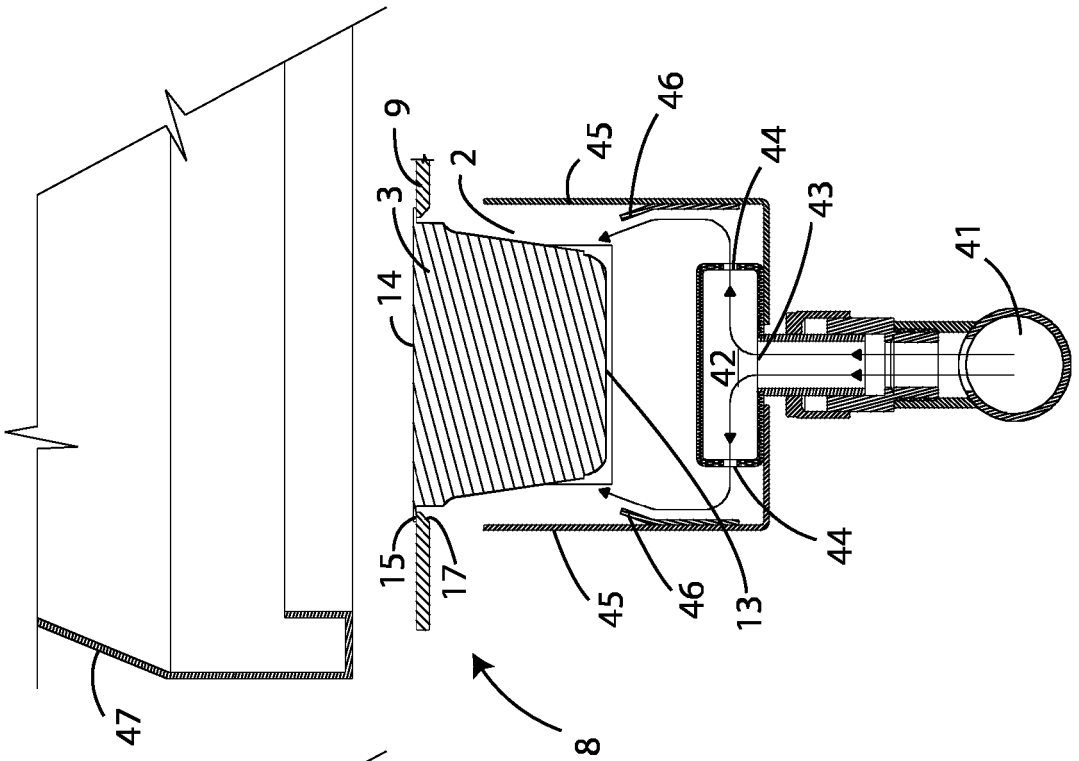
47
8
9
2
3
14
15
17
45
46
44
43
42
41
13

Fig. 9b

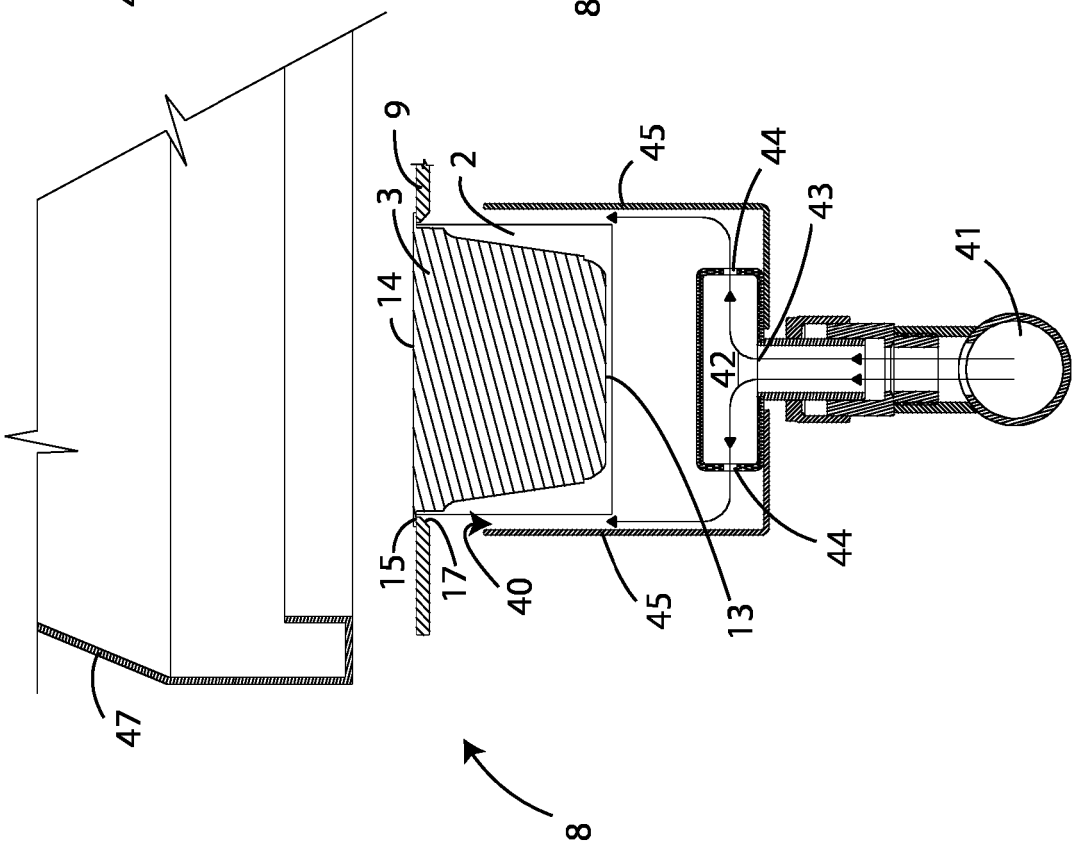
47
8
9
2
3
14
15
17
40
45
44
43
42
41
13

Fig. 9a

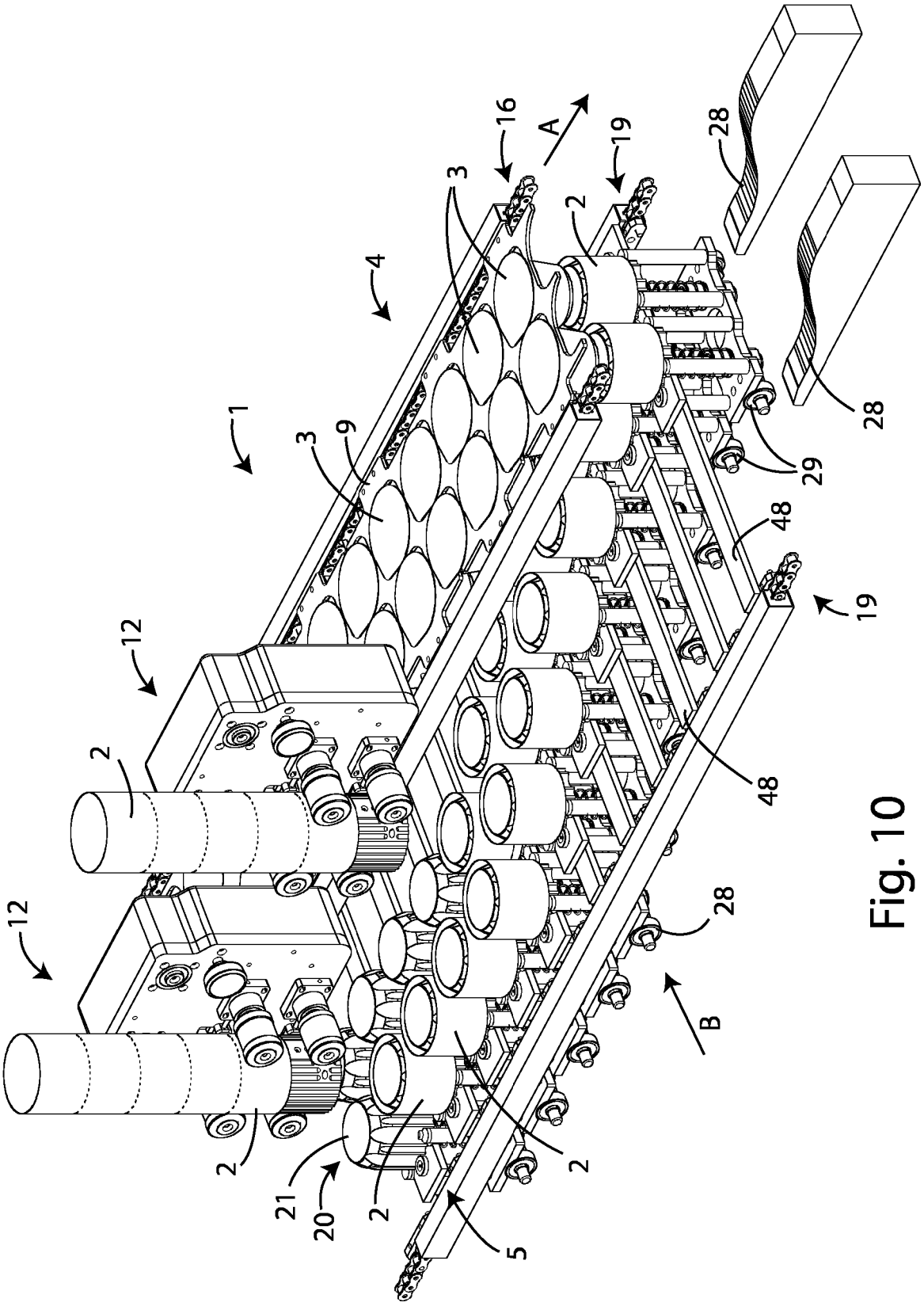

Fig. 10

REFERENCES CITED IN THE DESCRIPTION

This list of references cited by the applicant is for the reader's convenience only. It does not form part of the European patent document. Even though great care has been taken in compiling the references, errors or omissions cannot be excluded and the EPO disclaims all liability in this regard.

Patent documents cited in the description

- WO 2004067385 A1 **[0013]**