March 21, 1944. T. NAGEL 2,344,519

APPARATUS FOR BURNING OIL

Filed Dec. 27, 1941

Fig. 1.

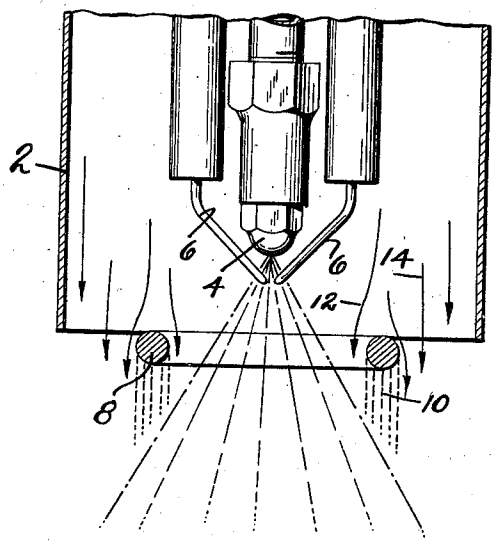

Fig. 2.

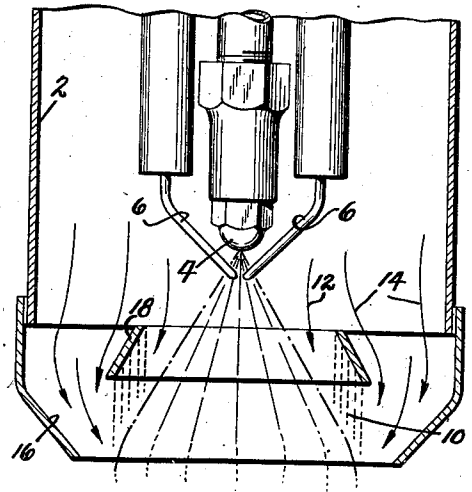

Fig. 3.

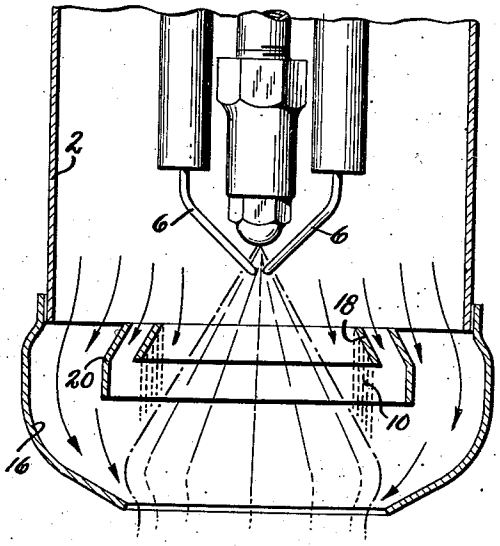

INVENTOR
Theodore Nagel
BY
Kiddle, Bechtel and Montgomery
ATTORNEYS.

Patented Mar. 21, 1944

2,344,519

UNITED STATES PATENT OFFICE

2,344,519

APPARATUS FOR BURNING OIL

Theodore Nagel, Brooklyn, N. Y.

Application December 27, 1941, Serial No. 424,589

2 Claims. (Cl. 158—76)

This invention relates to oil burners and to the burning of liquid hydrocarbons.

The primary object of my invention is to provide a wind-shielded zone within the combustion-air stream flowing from an oil burner, so that at or adjacent this wind-shielded zone a non-floating, stable and permanent ignition flame will be maintained throughout the desired operation of the burner.

In operating oil burners trouble is experienced with floating and instability of the ignition flame. This is such a problem that it is often difficult to establish stable flame ignition as well as to maintain stable flame combustion after ignition has been established.

My invention provides an apparatus whereby these difficulties are overcome in a simple, efficient manner, so that one is assured of a stable and non-floating ignition flame and stable flame combustion will proceed in the desired normal manner.

The invention is applicable to various types of oil burners but for purposes of illustration I have chosen to show it applied to mechanical pressure atomizing oil burners of the so-called "gun" type. It is to be understood that this showing is purely illustrative and not definitive.

Three embodiments of the invention have been illustrated.

Fig. 1 shows in part sectional elevation one embodiment of my invention; and

Figs. 2 and 3 are similar views of two other embodiments of the invention.

Referring to the drawing in detail and first of all to the embodiment illustrated in Fig. 1: 2 designates the barrel or air tube of an oil burner and 4 the atomizing nozzle. 6 designates the ignition electrodes. This construction is conventional.

In the operation of burners of this construction ignition and combustion air is supplied through the barrel or tube 2, and the fuel ejected through the nozzle 4 is ignited by the electrodes 6, the ignition current being cut off automatically after combustion is well established. After combustion is well established and after the ignition current has been cut off, maintenance of permanent ignition often results in a floating unsteady flame due to variations in air velocity and in many cases ignition fails.

My invention eliminates the difficulties heretofore encountered in maintaining permanent ignition and with floating flames.

I provide a windshield 8 in the air stream of the burner, this shield, in Fig. 1, taking the form of a metal ring or annulus. Its presence in the air stream will produce a reduced velocity, reduced pressure area at 10, that is, at the forward face of the ring, the air flowing forward through the tube 2, flowing at each side of the ring or windshield as shown by the arrows 12 and 14.

It will be appreciated that this reduced pressure area will draw atomized fuel and air thereinto, and inasmuch as the velocity of flow in this area is lower than the rate of flame propagation, a permanent ignition flame will be maintained in this area, thereby eliminating floating and unstable ignition flames after the current to the electrodes 6 has been cut off.

In the construction illustrated in Fig. 2 I provide an attachment for an oil burner, this attachment taking the form of a unit adapted to be attached to the burner air tube 2, for example, and comprising an inwardly tapered sleeve 16 spaced from, projecting beyond and surrounding a windshield 18. This shield is in approximately the same location as the windshield 8, but takes the form of an outwardly tapered sleeve, as distinguished from the annular windshield of Fig. 1. It will be understood that the windshield of this embodiment of my invention will produce a reduced pressure, reduced velocity area at the inner face of and in front of the shield as indicated by the broken lines 10, while the inwardly tapered sleeve 16 will converge into the diverging stream of ignited atomized oil the combustion air deflected outwardly by the outer face of the windshield.

In Fig. 3 I provide still another form of attachment. This embodiment of my invention provides a shield 18, the same as in Fig. 2, and in addition this shield is surrounded with another windshield 20 which is spaced from 18 and extends for an appreciable distance beyond the exit end thereof. This additional shield affords a further protection from disturbance of the ignition flame without, however, in any way varying the low pressure area 10. The sleeve 16 of this unit attachment functions to convert the air deflected outwardly by the exterior of the windshield 20 into a converging stream of combustion air.

It will be apparent from the foregoing that in all three embodiments of my invention I produce a wind-shielded, reduced pressure, low velocity area within the combustion air stream so as to be assured of a non-floating, stable and permanent ignition flame so long as the burner is in operation.

It is to be understood that my invention may

take forms other than those herein illustrated and described without, however, departing from the spirit and scope of my invention.

What I claim is:

1. An oil burner comprising in combination an oil atomizer, a tube for combustion air surrounding and spaced from the atomizer and extending beyond the discharge end of the same, said tube beyond the discharge end of the atomizer gradually decreasing in diameter to provide a discharge throat of less diameter than the main body of the air tube, an annulus wholly in front of and concentric with the atomizer disposed within the air tube and spaced from the wall thereof, the wall of said annulus terminating short of the throat end of said air tube and flaring outwardly away from the axis of said atomizer, a second annulus intermediate said first annulus and said air tube and spaced from both, the wall of the second annulus flaring outwardly of the burner axis and terminating in a throat intermediate the outer ends of the first annulus and said air tube, the diameter of this throat being not less than the diameter of the said air tube discharge throat.

2. An oil burner comprising in combination an oil atomizer, a tube for combustion air surrounding and spaced from the atomizer and extending beyond the discharge end of the same, said tube beyond the discharge end of the atomizer gradually decreasing in diameter to provide a discharge throat of less diameter than the main body of the air tube, an annulus wholly in front of and concentric with the atomizer disposed within the air tube and spaced from the wall thereof, the wall of said annulus terminating short of the throat end of said air tube and flaring outwardly away from the axis of said atomizer, a second annulus intermediate said first annulus and said air tube and spaced from both, the wall of the second annulus flaring outwardly of the burner axis throughout part of its length, the outer portion of the wall of the second annulus extending parallel to the atomizer axis and terminating beyond the terminal of the first annulus and short of the discharge throat of said air tube.

THEODORE NAGEL.