Oct. 30, 1945. W. H. DIMSDALE ET AL 2,387,887

X-RAY DOSAGE INDICATOR

Filed June 27, 1944

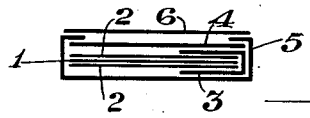

Fig. 1

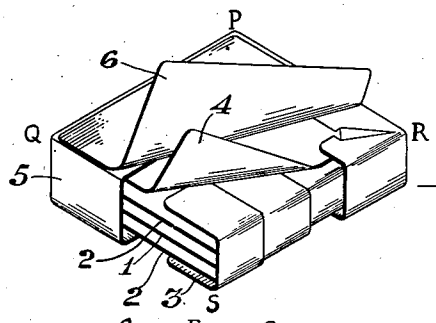

Fig. 2

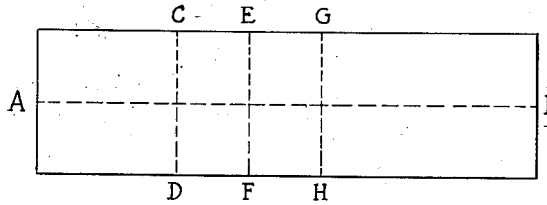

Fig. 3A

Fig. 3B

Fig. 3C

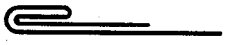

Fig. 3D

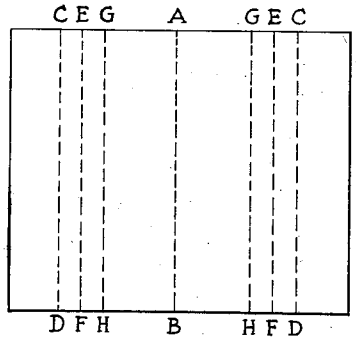

Fig. 4

Fig. 5

Fig. 8

Fig. 6

Fig. 7

INVENTORS
Wilfrid Hampden Dimsdale
Alfred Eli Clarke
BY
Lynn B. Morris
ATTORNEY

Patented Oct. 30, 1945 2,387,887

UNITED STATES PATENT OFFICE

2,387,887

X-RAY DOSAGE INDICATOR

Wilfrid Hampden Dimsdale and Alfred Eli Clarke, Ilford, England, assignors to Ilford Limited, Ilford, England, a British company

Application June 27, 1944, Serial No. 542,392
In Great Britain July 27, 1943

9 Claims. (Cl. 250—83)

This invention relates to radiography and particularly to devices for use in detecting and estimating quantities of X-radiation and gamma-radiation.

For some time it has been customary for workers with X-rays and gamma-rays to carry on their person a piece of photographic film protected against light but not against X-rays or gamma-rays. After some period of time, for example a week, the film is developed in a normal photographic developer and the density of the developed silver (if any) serves as an indication of the extent to which X-rays and gamma-rays have affected the film. Since X-rays and gamma-rays are dangerous to health, the film thus serves as an indication of whether the worker has been exposed to a dangerous quantity of radiation.

A difficulty arises, however, in that the natural "fog" density of the film employed is not usually known. The "fog" density is the density of the silver deposit formed on development when the film has not been exposed either to light or to X-rays or gamma-rays, and this value is liable to vary from film to film and with the age of the film. Thus, especially for small quantities of X-radiation or gamma-radiation, it is not possible to be certain how much of the developed silver density is due to X-radiation or gamma-radiation and how much due to the natural fog density of the film.

According to the present invention, this difficulty is overcome by providing, close to the light-sensitive material, e. g. photographic film, a mask having two or more areas of different permeability to X-rays or gamma-rays, one area of the mask being substantially impermeable to such rays, the said mask covering only a fraction of the area of the film.

The mask may be in the form of a metal sheet having two or more areas of different thicknesses and therefore different permeability to X-rays or gamma-rays, or may consist of two or more separate or adjacent sheets of different metals having differing permeability to X-rays or gamma-rays. More than one such mask may be provided, e. g. two masks each in the form of a metal sheet having two or more areas of different thicknesses and therefore different permeability to X-rays or gamma-rays, and being formed of the same or different metals. A single mask may be provided on one side of the film, or two or more similar or different masks may be provided on the opposite sides of the film, or the differing areas of a single mask may be distributed between the two sides of the film.

By employing a mask element having an area which is substantially impermeable to X-rays or gamma-rays, it is possible, where the amount of X-rays or gamma-rays which have affected the film is small, to distinguish adequately between the density of the developed silver which is due to X-radiation or gamma-radiation and the natural fog density which is that of the film covered by the substantially impermeable area of the mask. If the mask is provided on one side of the film only, it is important that an indication be given on the outside of the film container showing which side of the film is to be exposed to the X-rays or gamma-rays, i. e. the side on which the mask is provided is to be that facing the source of X-rays or gamma-rays. It is preferred, however, to provide similar masks on both sides of the film so that it becomes immaterial which side faces the source of X-rays or gamma-rays, and preferably, though it is not absolutely necessary, such masks should be in register with one another.

As stated above, the mask may consist essentially of sheet metal having areas of different permeability to X-rays or gamma-rays. Then if the permeability characteristics of the metal sheet to X-rays or gamma-rays are known it is possible by examining the density of the image on the developed film to obtain an accurate estimation of the quantity of X-rays or gamma-rays which have fallen on the film. Such a mask of graduated permeability may be constructed so that the permeability ranges from a maximum at one end of the metal sheet (the end of minimum thickness) to a minimum at the other end (the end of maximum thickness) and the end of minimum permeability may be arranged to be such that any image formed on the area of the film covered by such end may be regarded, for practical purposes, as representing only the natural fog density of the film. The metal sheet may be constructed to have a smoothly varying thickness (and therefore degree of permeability) from one end to the other, but it is preferred that the thickness should vary in steps. This may readily be effected by the suitable folding of a strip of metal foil so that in the folded strip there is an area of single thickness, another of double thickness and so on as required. The use of mask elements so constructed forms an especially valuable and preferred feature of the present invention.

The use of such a mask element enables an estimate to be made on the quantity of X-rays or gamma-rays which have affected the film and

also, by comparing the densities of the developed silver lying under areas of the mask of successively and regularly increasing thicknesses, enables an estimate to be made of the quality of the X-rays which have affected the film, the difference in density between the successive areas affording an indication of the hardness or softness of the X-rays which have affected the film.

It may arise that a single mask formed, for example, in lead foil, does not afford a sufficiently wide range of impermeability to the rays. In this case two masks may be provided, one in a material which has a high degree of impermeability to X-rays or gamma-rays, e. g. lead or a lead alloy, and one which has a lower degree of impermeaability to such rays, e. g. copper or a copper alloy. Thus, it is found that lead foil of about .004" thickness folded as indicated above is especially useful where the incident radiation is, for example X-rays generated at 100–150 kvp., whilst at lower kilovoltages a brass or copper mask is more suitable.

The accompanying drawing illustrates suitable forms of the invention but are not to be regarded as limiting the invention in any way.

In this drawing Figure 1 represents a cross-section through an assembly of sensitive film, mask and protective coverings, Figure 2 represents an isometric view of this assembly cut away to show the individual layers, Figures 3A, 3B, 3C and 3D illustrate one method of constructing a mask element according to the invention, and Figures 4–8 inclusive illustrate alternative forms of mask.

Referring to Figures 1 and 2, the assembly consists of: a sheet of sensitive film **1** or paper, which may be coated with X-ray sensitive emulsion on one or both sides; two sheets of black paper **2** provided on either side of the film **1** to protect the latter from exposure to light, a mask element **3** which is arranged to fold along one edge of the assembly, a protective sheet **4** and a wrapper **5** which is folded round the assembly and overlaps the margins of the sheet **4**, and a cover sheet **6**. The wrapper **5** is stuck, at its marginal edges, to the sheet **4** and the cover sheet **6** is stuck, at its marginal edges, to the marginal edges of the sheet **5**. If desired the cover sheet **6** may also be locally stuck directly to the sheet **4**. By arranging that the adhesives used and the wrapping papers are water-resistant and that the wrapper **5** and sheet **4** are impervious to light, a water- and light-resistant assembly is produced.

Figures 3A, 3B, 3C and 3D illustrate a method of forming the mask element **3** of Figures 1 and 2. A sheet of metal foil, e. g. lead foil .004 inch thick, as illustrated in plan in Figure 3A and in section in Figure 3B is employed. First the foil is folded along the line EF of Figure 3A thus bringing it to the form illustrated in Figure 3C. The line CD of Figure 3A then lies over the line GH of Figure 3A. Next the foil is folded along the coincident lines CD and GH, which brings the foil to the form shown in Figure 3D. It will be seen from the drawing that the result of these folds is to make the thickness of one end of the sheet equal to four thicknesses of foil, the middle portion of the sheet equal to two thicknesses of the foil and the other end of the sheet a single thickness of foil. Finally the foil is folded along the line AB (Figure 3A) and in this condition can be used as the mask for the assembly of Figures 1 and 2 by arranging that the fold AB lies along the marginal edge RS of Figure 2 and the coincident folds CD and GH along either the line PR or the line QS of Figure 2.

In this way it is arranged that the mask is of varying permeability along its length, stepwise in the ratio 4:2:1, that it is exactly in register on the two sides of the film **1**, and that it cannot easily be dislodged during normal handling of the assembly. An alternative form of constructing a similar mask is illustrated in Figures 4 and 5. The method of folding the mask is the same as for Figure 3A, but is duplicated for the right and left sides of the original mask element. The final fold along AB brings the mask to the form shown in Figure 5. This construction provides only a single thickness of foil at AB and thus tends to reduce bulkiness of the marginal edge RS of the assembly. With this construction the steps of the mask are of increasing thickness in the direction R to P instead of, as in the mask of Figure 3A, of increasing thickness from R to S or S to R.

The construction of the assembly can conveniently be of the general size and dimensions of a dental radiographic film pack of conventional design, and the cover sheet **6** of Figures 1 and 2 can conveniently consist of a label carrying a printed description of the product. If desired, this cover sheet **6** and the protective sheet **4** may be provided with a cut so that on bending the assembly with the cut portion on the convex side a tab is formed which may be pulled to tear away the wrappings from the film. A device of this character is described in British patent specification No. 423,809 in connection with a dental radiographic film pack assembly.

It will be appreciated that there is considerable scope for variation of the precise structure of the assembly and of the mask or masks employed, and that the particular form of the invention illustrated in the accompanying drawing represents only one of numerous variations. Thus, for example, the mask may consist of several strips of different metals of uniform thickness; a mask may be provided on one side only of the film; where masks on both sides are employed they need not be in register nor need they be formed of one piece folded round the edge of the assembly as shown in the drawing. Moreover, instead of a mask having a thickness ratio varying as 4:2:1 as in Figure 3, other methods of folding the metal foil may be used to give other ratios, for example those illustrated in section in Figure 6, where the ratio is 1:3:4, in Figure 7 where the ratio is 1:3:5, or in Figure 8 where the ratio is 1:3:2.

Instead of comprising a single film element, the assembly may comprise two such elements separated by a layer of metal foil which is substantially impermeable to X-rays and gamma-rays. In this way the two films may be used separately to record the quantity of X-rays or gamma-rays present under different conditions, or over different periods of time, merely by changing the side of the assembly facing the source of X-rays or gamma-rays.

If desired, in order to secure the mask element more firmly in position, it may be stuck to one of the paper sheets in the assembly. For example, an extra sheet of paper may be introduced between the lower sheet of paper **2** and the lower part of the mask **3** in Figure 1, this extra sheet of paper being coated with an adhesive on its lower side and the lower part of the mask **3** being stuck to it. Such an arrangement, by securing the mask in position initially,

sometimes makes for simplicity in building up the assembly.

Although in the assembly illustrated in the accompanying drawing and described above the mask or masks are included within the package which contains the film, the masks may be included in a separate permanent cassette into which a packet of film may be inserted. Thus, for example, a cassette made of cardboard or similar material may include a mask or masks in accordance with this invention and be adapted to hold a dental radiographic pack of conventional design so that the mask or masks lie on the outside of the pack and thus exert their masking effect on the film within the pack.

What we claim is:

1. A film pack for use in detecting and estimating quantities of X-radiation and gamma-radiation which comprises a sheet of photographic film contained in a package protecting it against light but not against X-rays and gamma-rays, and provided with a mask consisting of a metal sheet having at least two areas of different thicknesses, the thickest area of the mask being substantially impermeable to such rays, the said mask covering only a fraction of the area of the film.

2. A film pack for use in detecting and estimating quantities of X-radiation and gamma-radiation which comprises a sheet of photographic film contained in a package protecting it against light but not against X-rays and gamma-rays, and provided with a mask consisting of a metal sheet folded to provide areas which are different multiples of the thickness of the sheet, and thus areas of different effective thickness, the thickest area being substantially impermeable to X-rays and gamma-rays, the said mask covering only a fraction of the area of the film.

3. A film pack for use in detecting and estimating quantities of X-radiation and gamma-radiation which comprises a sheet of photographic film contained in a package protecting it against light but not against X-rays and gamma-rays, and provided on opposite sides of the film with masks each consisting of a metal sheet folded to provide areas which are different multiples of the thickness of the sheet, and thus areas of different effective thickness, the thickest area of at least one such mask being substantially impermeable to X-rays and gamma-rays, the said masks each covering only a fraction of the area of the film.

4. A film pack for use in detecting and estimating quantities of X-radiation and gamma-radiation which comprises a sheet of photographic film contained in a package protecting it against light but not against X-rays and gamma-rays, and provided on opposite sides of the film with masks each consisting of a metal sheet folded to provide areas which are different multiples of the thickness of the sheet, and thus areas of different effective thickness, the thickest area of at least one such mask being substantially impermeable to X-rays and gamma-rays, the said masks each covering only a fraction of the area of the film, the said masks being in register with one another.

5. A film pack for use in detecting and estimating quantities of X-radiation and gamma-radiation which comprises a sheet of photographic film contained in a package protecting it against light but not against X-rays and gamma-rays, and provided on the same side of the film with two masks each consisting of a metal sheet folded to provide areas which are different multiples of the thickness of the sheet, and thus areas of different effective thickness, the thickest area of one such mask being substantially impermeable to X-rays and gamma-rays, the said masks each covering only a fraction of the area of the film, one of such masks being formed of a metal highly impermeable to X-rays and gamma-rays and the other being formed of a metal of relatively low impermeability to X-rays and gamma-rays.

6. A film pack for use in detecting and estimating quantities of X-radiation and gamma-radiation which comprises a sheet of photographic film contained in a package protecting it against light but not against X-rays and gamma-rays, and provided with a mask consisting of metal foil folded to provide areas which are different multiples of the thickness of the foil, the said foil being further folded symmetrically along one edge of the film to provide similar masking areas of different effective thickness, in register, on the two sides of the film, the thickest area of the foil being substantially impermeable to X-rays and gamma-rays and the said mask covering only a fraction of the area of each side of the film.

7. A film pack for use in detecting and estimating quantities of X-radiation and gamma-radiation which comprises a sheet of photographic film contained in a package protecting it against light but not against X-rays and gamma-rays, and provided with a mask consisting of a lead sheet having at least two areas of different thicknesses, the thickest area of the mask being substantially impermeable to such rays, the said mask covering only a fraction of the area of the film.

8. A film pack for use in detecting and estimating quantities of X-radiation and gamma-radiation which comprises a sheet of photographic film contained in a package protecting it against light but not against X-rays and gamma-rays, and provided with a mask consisting of a lead sheet folded to provide areas which are different multiples of the thickness of the sheet, and thus areas of different effective thickness, the thickest area being substantially impermeable to X-rays and gamma-rays, the said mask covering only a fraction of the area of the film.

9. A film pack for use in detecting and estimating quantities of X-radiation and gamma-radiation which comprises a sheet of photographic film contained in a package protecting it against light but not against X-rays and gamma-rays, and provided on the same side of the film with two masks each consisting of a metal sheet folded to provide areas which are different multiples of the thickness of the sheet, and thus areas of different effective thickness, the thickest area of one such mask being substantially impermeable to X-rays and gamma-rays, the said masks each covering only a fraction of the area of the film, one of such masks being formed of lead and another copper.

WILFRID HAMPDEN DIMSDALE.
ALFRED ELI CLARKE.