P. G. VAN WIJK.

ELECTROMAGNETIC OVERLOAD CUT-OUT MAGNET.

APPLICATION FILED JUNE 13, 1918.

1,350,902. Patented Aug. 24, 1920.

Fig. 1

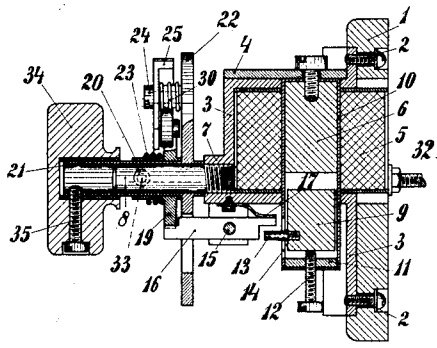

Fig. 2

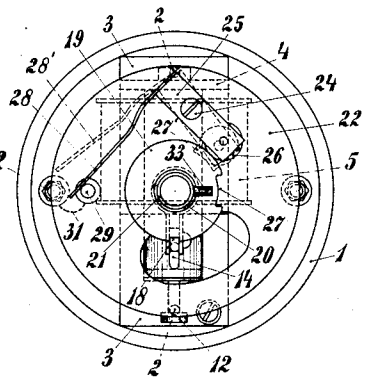

Fig. 3

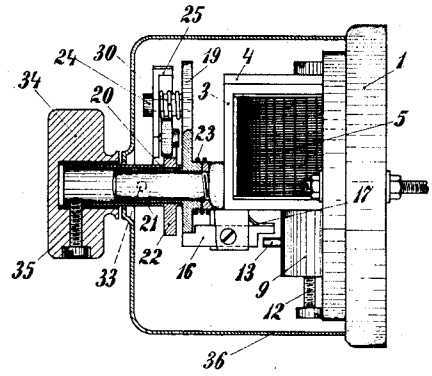

Fig. 4

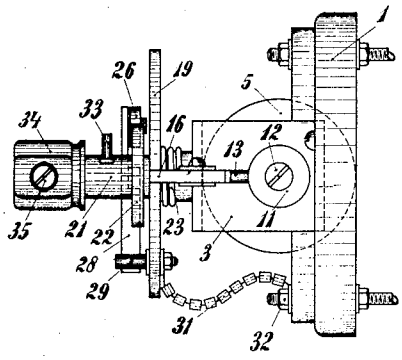

Witnesses

Inventor

Pieter G. van Wijk

By

James L. Norris,

Attorney

UNITED STATES PATENT OFFICE.

PIETER GERRIT VAN WIJK, OF GELDERMALSEN, NETHERLANDS.

ELECTROMAGNETIC OVERLOAD CUT-OUT MAGNET.

1,350,902. Specification of Letters Patent. Patented Aug. 24, 1920.

Application filed June 13, 1918. Serial No. 239,843.

To all whom it may concern:

Be it known that I, PIETER GERRIT VAN WIJK, manufacturer, a subject of the Queen of the Netherlands, residing at Geldermalsen, in the Province of Gelderland, in the Kingdom of the Netherlands, have invented certain new and useful Improvements in Electromagnetic Overload Cut-Out Magnets, of which the following is a specification.

This invention relates to an electromagnetic overload cut out or switch of the type in which, when the cut out magnet is excited the armature of this magnet releases one of two parts which are capable of rotating around a common axis, one of these parts being then rotated through a certain angle, under the influence of a spring or equivalent means, relatively to the other part and the relative rotary motion between these two parts serving to bring the cut out into action.

According to the invention either of the parts referred to can take the form of disks and on one of them a lever which may be under spring pressure can be arranged so that on relative rotation between the two parts the free end of the lever is pressed into a notch or recess provided in the second part. The interruption of the circuit is caused by this movement of the lever.

Modified forms of the invention are described hereafter with reference to the drawing.

The switch in accordance with this invention has the advantage that it is of simple and compact construction. Also its construction is such that it is impossible, by holding the switch knob, to prevent the current itself from interrupting the circuit, in other words the interruption of the circuit by the current itself and the switching in and switching out by hand have no influence upon each other in any way.

An example of a cut-out or switch embodying the present invention is illustrated on the accompanying drawing in which:

Figure 1 is a vertical longitudinal section of the switch.

Fig. 2 a front elevation of the switch as shown in Fig. 1 with the hand knob removed.

Fig. 3 is a view partially in vertical cross section and partially in side elevation of a modified form of switch embodying the invention, and

Fig. 4 is a bottom plan view of the switch shown in Fig. 3.

The cut out magnet consisting of the solenoid 5 and an iron core 6 is fixed by means of screws 2 and also by means of a bracket 3, 4 to a base plate 1 of insulating material. The bracket 3 extends down the front of the solenoid 5 and is there provided with a tapped hole 7 into which a stud 8 to serve as a fixed axis is screwed. The use of this stud will be explained below. The armature 9 of the magnet 5 is adjustable in a sleeve 10 arranged in the center of the solenoid 5, whereby the armature 9 is guided in its vertical motion. A set screw 12 screwed through the base of the sleeve 10 serves to regulate the stroke of the armature 9. The armature 9 is further provided with a pin 13 protruding from its side and passing through a vertical slot 14 arranged in the sleeve 10. When the armature 9 is lifted this pin 13 strikes against the back end of a two-armed locking lever 16 capable of rocking around a pin 15. This locking lever 16 is held down at its rear end by means of a spring 17. The front end of the locking lever 16 catches in a notch 18 in the disk 19. This disk 19 is capable of rotation around the stud 8 and its hub 20 can turn on the hub 21 of a second disk 22 arranged on the same stud 8. A spiral spring 23 tends to cause the disk 19 to rotate in an anti-clockwise direction (Fig. 2) but when the switch is in closed condition this is prevented by the engagement of the locking lever 16 in the notch 18 in the disk 19.

In the construction shown in the drawing the disk 22 carries a two-armed lever 25 capable of rocking around a pin 24 by which it is pivotally mounted on the disk 22. One arm of this lever 25 carries a roller 26 which rests on the circumference of the disk 19. This disk 19 is provided with a notch or recess 27 into which the roller 26 is pressed (shown by the dotted lines in Fig. 2) when the two disks 19 & 22 are in a certain position relatively to one another. To the opposite end of the lever 25 there is fixed, approximately at right angles to said lever, a contact spring 28 which in its circuit closing position is pressed against an insulated contact stud 29 fixed to the disk 22, under the influence of a spiral spring 30 which acts on the lever 25 to move the latter and the contact spring 28 into the full line position shown in Fig. 2. The contact stud 29

is connected to one of the poles or to one of the line terminals 32 of the switch by means of a flexible insulated lead 31, while the contact spring 28 is connected through the lever 25, the disk 22, the stud 8, the bracket 3 and through the winding of the solenoid, with the other pole or line terminal 32. The hub 20 of the disk 19 is provided with a slot through which a pin 33 passes and this pin sets a limit to the relative rotation of the disks 19 and 22.

The hub 21 of the disk 22 extends to the front end of the stud 8 and is there provided with a hand knob 34 which is fixed to it by a screw 35 and by means of which the switch can be opened and closed by rotary motion of the hand knob in a manner similar to that of an ordinary rotary switch.

Figs. 1 and 2 show the switch in closed position. When the current passing through the switch exceeds a predetermined value, the armature 9 is attracted and the disk 19 set free from the locking-lever 16. Under the influence of the spring 23 (Fig. 1) the disk 19 turns in an anti-clockwise direction (Fig. 2) and, under the action of the spring 30, the roller 26 is pressed into the notch 27 (this position being shown in dotted lines Fig. 2) whereby the contact between the parts 28 & 29 is broken. Opening of the switch can also be accomplished by hand by turning the hand-knob in a clockwise direction, Fig. 2. This causes the disk 22 with the lever 25 and contact spring 28 thereon to turn until the roller 26 comes opposite to the notch 27 of the disk 19 into which notch the roller 26 is pressed by the spring 30, thus causing the contact spring 28 to disengage from the contact pin 29. The switch can be closed after being opened, by simply turning back the hand-knob 34 in an anti-clockwise direction.

Figs. 3 and 4 show a modified design of the invention in which the switch lever 25 with its contact spring is attached to the same disk 19 which is locked by the locking-lever 16. The second (front) disk is provided with a notch 27 for the roller 26 and has a long hub which extends to the front end of the axis. The hand-knob 34 is attached to this hub by means of a screw 35. The remainder of the construction corresponds exactly to that shown in Figs. 1 & 2. The protecting cover 36 which should be sealed is, for the sake of clearness, left out from Figs. 1, 2 & 4. In both constructions the switch will operate automatically to break the circuit in case of an overload, independently of the hand knob which serves to manually operate the switch, and furthermore the automatic opening of the switch under the influence of the current passing through it, will occur even though an attempt might be made to prevent such action by holding of the hand knob 34. This is due to the fact that the breaking of the circuit between the contact pin 29, and the contact spring or arm 28 is affected by the electromagnetic release of a member which is capable of rotation independently of the hand knob and this member, when rotated, causes disengagement of the circuit closing or contact members, the operation of the electromagnetically released disk or member occurring independently of the hand knob. Furthermore, in both constructions the switch or cut-out may be opened manually by turning the hand knob in a clockwise direction, independently of the electromagnetic or automatic release as the disk or member connected to the hand knob when rotated relatively to the other disk or member will cause the roller 26 to enter the notch in the periphery of the other disk or member, thus disengaging the contact spring 28 from the contact stud 29.

In cases where a particularly great safeguard against exceeding the maximum permissible current strength is of importance the lead 31 can be chosen of such size or of such a material that it can fuse should the switch not operate.

I claim as my invention—

1. In an electromagnetic overload cut-out or switch of the type having a solenoid adapted to be energized by the current, and a switch releasing armature operative by the solenoid, the combination of a pair of members relatively rotatable about a common axis, a circuit closing lever movably mounted on one of said members, the other member having a notch or recess with which a part of said lever coöperates, and a detent controlled by the armature of the solenoid and normally restraining one of said members from rotation relatively to the other member, relative rotation between the members acting to actuate said lever to control the circuit through the switch.

2. In an electromagnetic overload cut-out or switch of the type having a solenoid energized by the current passing through the switch, and an armature operative by the solenoid, the combination of a pair of disks mounted to rotate relative to one another about a common axis, one of said disks being provided with a notch and the other disk having a circuit controlling lever pivoted thereto and having a portion adapted to enter the notch in the companion disk when the disks are relatively rotated, and a detent controlled by the armature and controlling rotation between the disks.

3. In an electromagnetic overload cut-out or switch of the type having a solenoid adapted to be energized by current passing through the switch, and an armature operative by the solenoid, the combination of a pair of disks relatively rotatable one beside the other, one of said disks having a notch

therein, a lever pivotally mounted on the other disk and having a part arranged to enter said notch, said lever carrying a contact arm to coöperate with a contact member on the same disk, one of said disks having a tendency to rotate relatively to the other disk and thus bring the notched portion of one disk into position to coöperate with the lever on the other disk, a detent controlled by the armature and controlling relative rotation between the disks, and a flexible lead for connecting the contact stud on one of the disks to a stationary terminal.

In testimony whereof I have hereunto set my hand.

PIETER GERRIT VAN WIJK.