March 9, 1948. E. D. BOOKMAN 2,437,417

REFRIGERATING AND AIR CONDITIONING APPARATUS

Filed Dec. 20, 1944 2 Sheets-Sheet 1

Fig. 1.

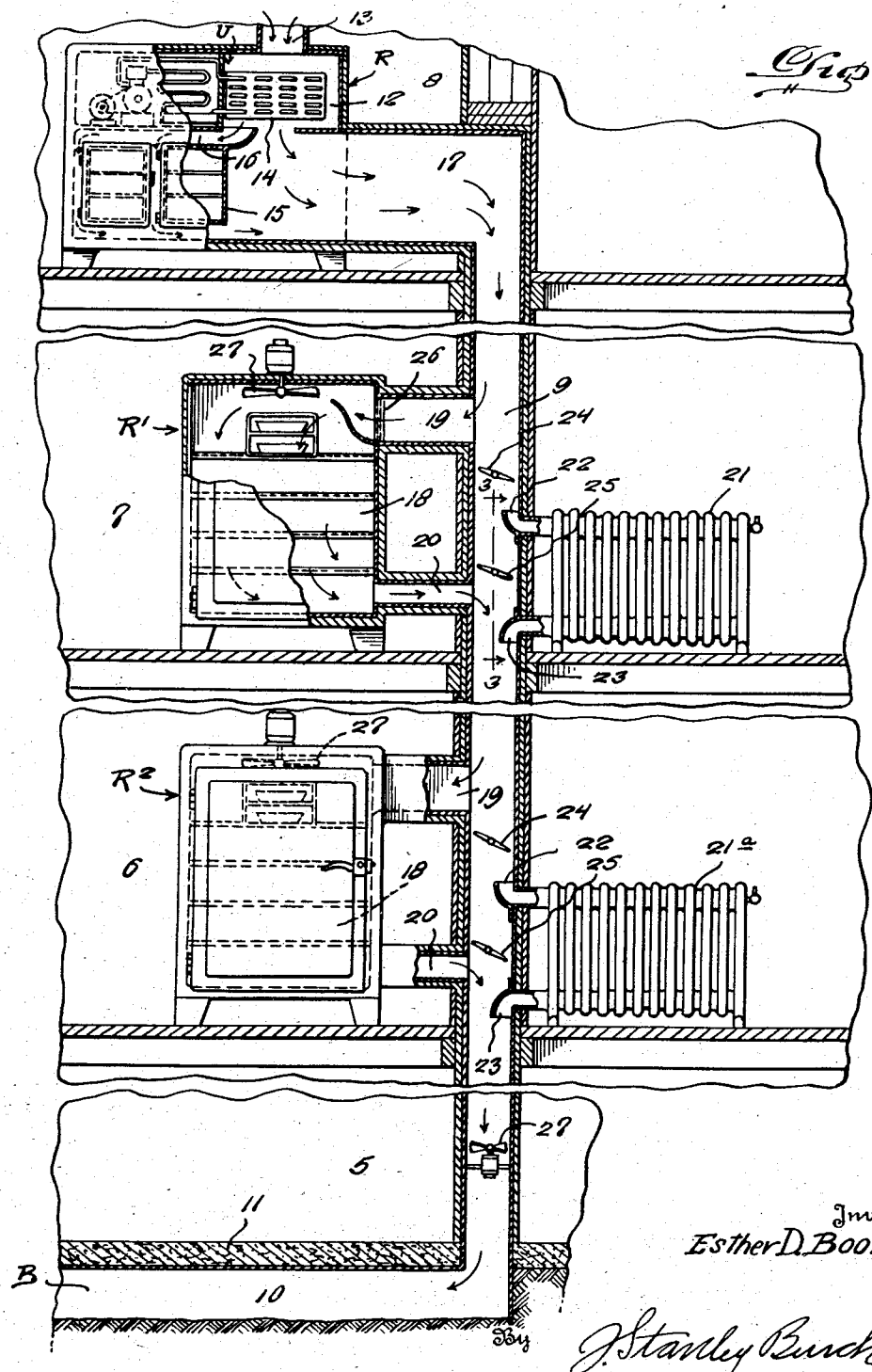

Inventor
Esther D. Bookman,
J. Stanley Burch
Attorney

March 9, 1948. E. D. BOOKMAN 2,437,417

REFRIGERATING AND AIR CONDITIONING APPARATUS

Filed Dec. 20, 1944 2 Sheets-Sheet 2

Fig. 2.

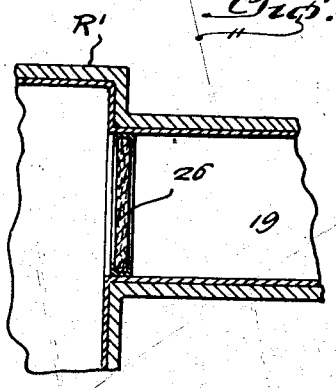

Fig. 3.

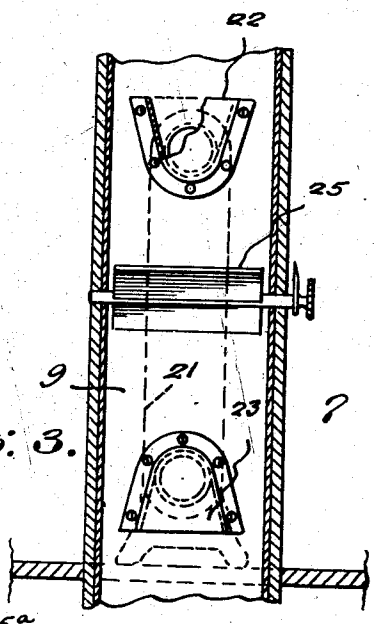

Fig. 4.

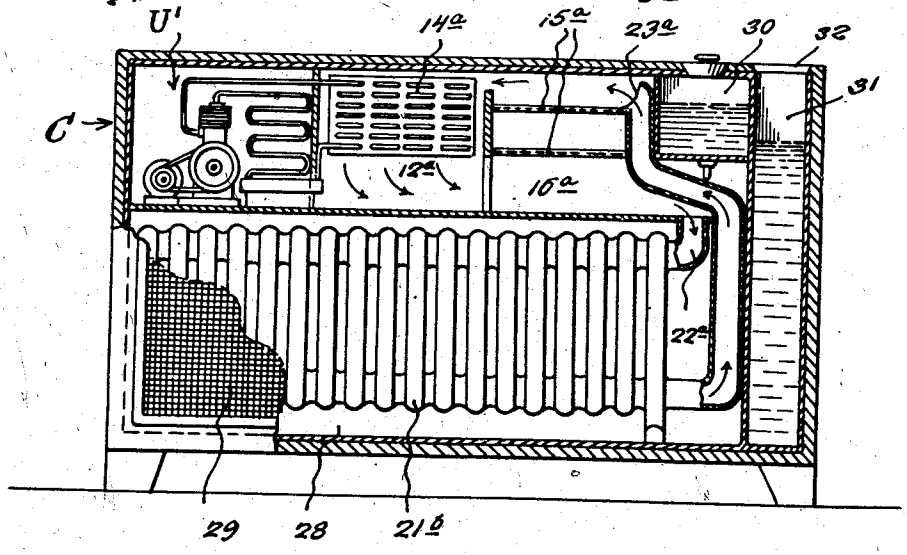

Inventor
Esther D. Bookman,

By J. Stanley Burch
Attorney

Patented Mar. 9, 1948

2,437,417

UNITED STATES PATENT OFFICE

2,437,417

REFRIGERATING AND AIR CONDITIONING APPARATUS

Esther D. Bookman, New York, N. Y.

Application December 20, 1944, Serial No. 569,029

9 Claims. (Cl. 62—129)

1

This invention relates to an improved apparatus for the preservation of foods or the like, and for the cooling of air within a room, by refrigeration.

The primary object of the invention is to provide a simple and efficient apparatus of the above kind embodying an automatic refrigerator having a refrigerating chamber provided with a warm air inlet, a storage chamber for foods or the like, a casing for the storage chamber spaced from the latter to permit circulation of cold air about the same, and a refrigerating unit having an evaporator arranged within the refrigerating chamber, the refrigerating chamber communicating with the space about the storage chamber to supply cold air to said space, said casing having a cold air outlet, and a cooling radiator located in the room and having an air inlet communicating with the cold air outlet of the storage chamber casing and an air outlet communicating with the warm air inlet of the refrigerating chamber.

A more specific object is to provide an apparatus of the above kind in which the automatic refrigerator is arranged in the upper portion of a building and the radiator is located on a lower floor of the building, in combination with a vertical flue in the building with which the air outlet of the storage chamber and the air inlet and the air outlet of the radiator communicate, a second refrigerator on said lower floor having a storage chamber provided with an air inlet and an air outlet communicating with said flue, and dampers in said flue for varying the amount of cold air diverted from said flue through the second refrigerator and the radiator.

Another object is to provide an apparatus of the above kind embodying a portable refrigerator and air conditioning cabinet having a compartment for the radiator which is provided with a foraminous wall and a compartment divided into the refrigerating and storage chambers. Other and more specific objects and features of the invention will become apparent from the following description, when considered in connection with the accompanying drawings.

In the drawings, wherein like reference characters indicate corresponding parts throughout the several views:

Figure 1 is a somewhat diagrammatic fragmentary view, partly in vertical section and partly in elevation, illustrating one embodiment of the invention.

Figure 2 is an enlarged fragmentary section showing the deodorizing air filter employed in

2

the cold air inlet of the secondary refrigerator.

Figure 3 is an enlarged fragmentary vertical section taken substantially on line 3—3 of Figure 1.

Figure 4 is a somewhat diagrammatic view, partly in front elevation, and partly in vertical section, of a portable refrigerator and air conditioning cabinet embodying the present invention.

Referring to the embodiment shown in Figs. 1 to 3 inclusive, 5, 6, 7 and 8 respectively indicate the basement and the first, second, and third floors of a building having a vertical flue or conduit 9 that extends from the upper floor 8 to the basement 5 and communicates at its lower end with a horizontal conduit or passage 10 beneath the basement floor 11.

Located in the upper floor 8 is an automatic refrigerator R having a refrigerating chamber 12 provided with a warm air inlet 13 that is adapted to be connected in any suitable manner to the passage 10. The refrigerator shown has an automatic electrically operated refrigerating unit U such as is commonly employed in electric household refrigerators and which includes an evaporator 14 located in the chamber 12. The refrigerator R also has an encased storage chamber 15 for foods or the like about which is a space for the circulation of cold air from the chamber 12. The casing of chamber 15 has a cold air outlet 17 which communicates with the upper end of flue 9.

Located on the floors 6 and 7 are secondary refrigerators R1 and R2, each having a storage space 18 provided with an air inlet 19 and an air outlet 20 communicating with the flue 9.

Also located on the floors 6 and 7 are cooling radiators 21 and 21a each having an air inlet 22 and an air outlet 23 communicating with the flue 9. Dampers 24 are provided in the flue 9 for varying the amount of cold air diverted from flue 9 through the refrigerators R1 and R2, and other dampers 25 are provided in flue 9 for varying the amount of cold air diverted from said flue through the radiators 21. While valves may be used to close the inlets 22 of the radiators in cold weather, they have not been shown because of their elementary nature.

The apparatus above described provides a central refrigerating plant for use on the upper floor and for supplying cold air to the cooling radiators and refrigerators on lower floors. In order to prevent passage of odors to the radiators R1 and R2, deodorizing air filters 26 are placed in the air inlets 19 thereof. Fans 27 may be used in the

refrigerators R1 and R2 and in the flue 9 to circulate the air through the apparatus.

In operation, air enters the chamber 12 through inlet 13 and is refrigerated by the unit U. This cold air passes around chamber 15 and into flue 9, and then circulates through the refrigerators R1 and R2 and radiators 21 and 21a so as to preserve the articles in the chambers 18 and cool the air on the floors 6 and 7. The temperature of the warmed air delivered to passage 10 is lowered within the latter due to the cool condition of the ground about said passage. This reduces the cooling required of unit U when the air returns to chamber 12 from the passage 10. The purpose of dampers 24 and 25 has been explained, and it will be seen that this embodiment provides a normally closed air circuit in which refrigerators and radiators for apartments on separate floors of a building are serviced by a refrigerator in an apartment on a higher floor.

Referring to Fig. 4, there is shown a portable refrigerator and air conditioning cabinet C provided with a lower compartment 28 having a cooling radiator 21b therein and also provided with a foraminous front wall 29. The cabinet also has an upper compartment divided into a refrigerating chamber 12a and a space 16a having storage shelves 15a located therein so that cold air may circulate about said storage shelves from the chamber 12a. The space 16a communicates with the inlet 22a of radiator 21b, and the outlet 23a of radiator 21b communicates with the chamber 12a via the upper portion of space 16a. The cabinet has an automatic refrigerating unit U1 including an evaporator 14a located in the chamber 12a.

The space 16a may contain a water tank or fountain 30 to hold water for drinking purposes, and a water tank 31 may be mounted in one end of the cabinet and provided with an open top registered with an opening 32 in the top of the cabinet so as to provide for humidifying the air in the room, in which the cabinet is used. Thermo-syphon or forced circulation may be used to this embodiment.

In operation, air circulates from chamber 12a through space 16a and radiator 21b, back to the chamber 12a via outlet 23a and the top of space 16a. Articles on the shelves 15a and the water in tank or fountain 30 will thus be cooled, and air entering and leaving the compartment 28 will be cooled by the radiator 21b.

From the foregoing description, it is believed that the construction and operation, as well as the advantages of the invention, will be readily understood and appreciated by those skilled in the art.

What I claim is:

1. A refrigerating and air conditioning apparatus comprising an automatic refrigerator having a refrigerating chamber, a food storage means, a space for the circulation of cold air from the refrigerating chamber about said storage means, and an automatic refrigerating unit including an evaporator arranged in said refrigerating chamber, and a room cooling radiator located outside the refrigerator and having an inlet communicating said space and an outlet communicating with said chamber so as to provide a closed air circulating system from said chamber through said space and said radiator back to said chamber.

2. In a refrigerating and air conditioning apparatus for a building having a plurality of floors and a basement, a vertical flue or conduit in the building, a horizontal passage beneath the floor of the basement communicating with the bottom of said flue, an automatic refrigerator on an upper floor of the building having a refrigerating chamber, a storage chamber, a space for the circulation of air from the refrigerating chamber about said storage chamber, and an automatic refrigerating unit including an evaporator arranged in said refrigerating chamber, said space communicating with the upper end of said flue, and a second refrigerator on a lower floor of the building having an air inlet and an air outlet communicating with said flue, said refrigerating chamber having an air inlet adapted to be connected to said passage.

3. In a refrigerating and air conditioning apparatus for a building having a plurality of floors and a basement, a vertical flue in the building, a horizontal passage beneath the floor of the basement communicating with the bottom of the flue, an automatic refrigerator on an upper floor of the building having a refrigerating chamber, a storage chamber, a space for the circulation of air from the refrigerating chamber about said storage chamber, and an automatic refrigerating unit including an evaporator in said refrigerating chamber, said space communicating with the upper end of said flue, and a cooling radiator on a lower floor of the building having an air inlet and an air outlet communicating with said flue, said refrigerating chamber having an air inlet adapted for connection to said passage.

4. In a refrigerating and air conditioning apparatus for a building having a plurality of floors, a vertical flue in the building, an automatic refrigerator on an upper floor of the building having a refrigerating chamber, a storage chamber, a space for the circulation of air from the refrigerating chamber about said storage chamber, and an automatic refrigerating unit including an evaporator in said refrigerating chamber, said space communicating with the top of said flue, and a second refrigerator on a lower floor of the building having a storage chamber provided with an air inlet and an air outlet communicating with said flue, said refrigerating chamber having an air inlet for connection with the bottom of said flue.

5. In a refrigerating and air conditioning apparatus for a building having a plurality of floors, a vertical flue in the building, an automatic refrigerator on an upper floor of the building having a refrigerating chamber, a storage chamber, a space for the circulation of air from the refrigerating chamber about said storage chamber, and an automatic refrigerating unit including an evaporator in said refrigerating chamber, said space communicating with the top of said flue, and a second refrigerator on a lower floor of the building having a storage chamber provided with an air inlet and an air outlet communicating with said flue, said refrigerating chamber having an air inlet for connection with the bottom of said flue, and a damper in the flue for varying the amount of air diverted from the latter through said second refrigerator.

6. In a refrigerating and air conditioning apparatus for a building having a plurality of floors, a vertical flue in the building, an automatic refrigerator on an upper floor of the building having a refrigerating chamber, a storage chamber, a space for the circulation of air from the refrigerating chamber about said storage chamber, and an automatic refrigerating unit including an evaporator in said refrigerating

chamber, said space communicating with the top of said flue, and a second refrigerator on a lower floor of the building having a storage chamber provided with an air inlet and an air outlet communicating with said flue, said refrigerating chamber having an air inlet for connection with the bottom of said flue, and a deodorizing air filter in the air inlet of said second refrigerator.

7. In a refrigerating and air conditioning apparatus for a building having a plurality of floors, a vertical flue in the building, an automatic refrigerator on an upper floor of the building having a refrigerating chamber, a storage chamber, a space for the circulation of air from the refrigerating chamber about said storage chamber, and an automatic refrigerating unit including an evaporator in said refrigerating chamber, said space communicating with the top of said flue and a cooling radiator on a lower floor of the building having an air inlet and an air outlet communicating with said flue, said refrigerating chamber having an air inlet for connection with the bottom of said flue.

8. In a refrigerating and air conditioning apparatus for a building having a plurality of floors, a vertical flue in the building, an automatic refrigerator on an upper floor of the building having a refrigerating chamber, a storage chamber, a space for the circulation of air from the refrigerating chamber about said storage chamber, and an automatic refrigerating unit including an evaporator in said refrigerating chamber, said space communicating with the top of said flue, and a cooling radiator on a lower floor of the

building having an air inlet and an air outlet communicating with said flue, said refrigerating chamber having an air inlet for connection with the bottom of said flue, and a damper in the flue for varying the amount of air diverted from the latter through said radiator.

9. A portable refrigerating and air conditioning apparatus comprising a combined refrigerator and air conditioning cabinet having a lower compartment provided with a foraminous front wall, a cooling radiator in said lower compartment, having an air inlet and an air outlet, said cabinet further having an upper refrigerating chamber, storage means, a space for circulation of air from the refrigerating chamber about said storage means, and an automatic refrigerating unit including an evaporator in said refrigerating chamber, said space communicating with the air inlet of the radiator, the air outlet of the radiator communicating with said refrigerating chamber.

ESTHER D. BOOKMAN.

REFERENCES CITED

The following references are of record in the file of this patent:

UNITED STATES PATENTS

Number	Name	Date
1,716,766	Cook	June 11, 1929
2,121,648	Wheaton	June 21, 1938
2,169,664	Shifflett	Aug. 15, 1939
2,414,588	Elliott	Jan. 21, 1947