US 20060236617A1

(19) United States

(12) Patent Application Publication (10) Pub. No.: US 2006/0236617 A1

Chen (43) Pub. Date: Oct. 26, 2006

(54) LATTICED NET STRETCHING AND FIXING STRUCTURE

(76) Inventor: **Shih-Yin Chen**, Sindian City (TW)

Correspondence Address:
ROSENBERG, KLEIN & LEE
3458 ELLICOTT CENTER DRIVE-SUITE 101
ELLICOTT CITY, MD 21043 (US)

(21) Appl. No.: 11/114,040

(22) Filed: Apr. 26, 2005

Publication Classification

(51) Int. Cl.
B61D 17/12 (2006.01)

(52) U.S. Cl. 52/50

(57) ABSTRACT

A latticed net stretching and fixing structure includes at least one fixing element fixedly mounted onto a vertical wall surface of a precast wall panel and having at least one horizontal section; at least one latticed net having a plurality of arrayed meshes and a winding section provided at one end thereof for winding around the horizontal section of the fixing element to overlap the latticed net, with the meshes on the winding section aligned with the meshed on the latticed net; and at least one transverse bar for weaving through the aligned meshes on the overlapped winding section and latticed net to thereby fix the latticed net to the fixing element, allowing the latticed net to be stretched and pulled in a direction opposite to the precast wall panel without separating from the fixing element.

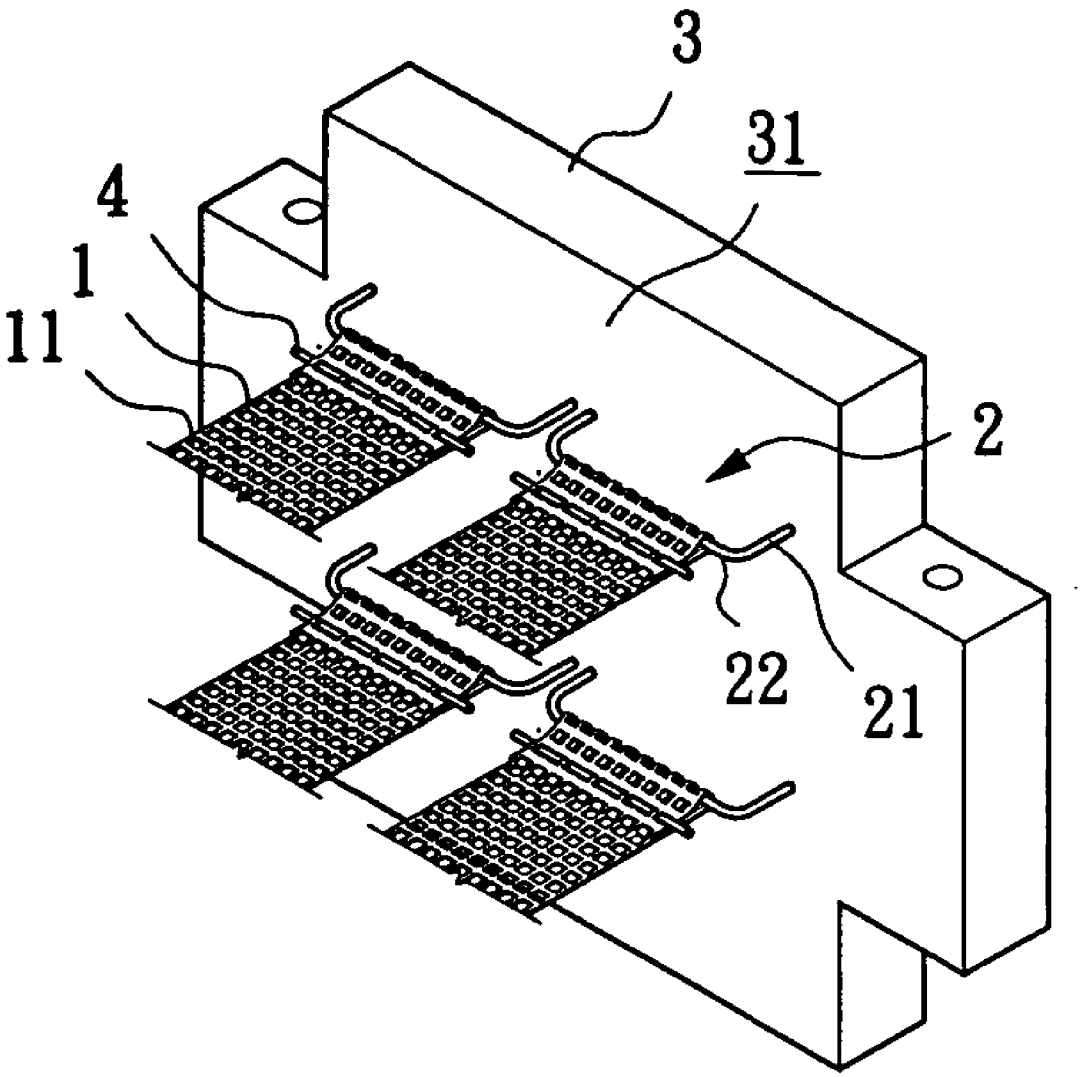

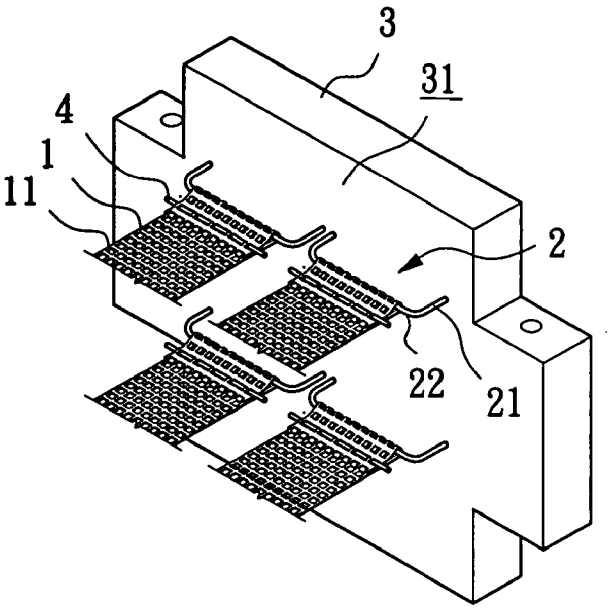

FIG.1

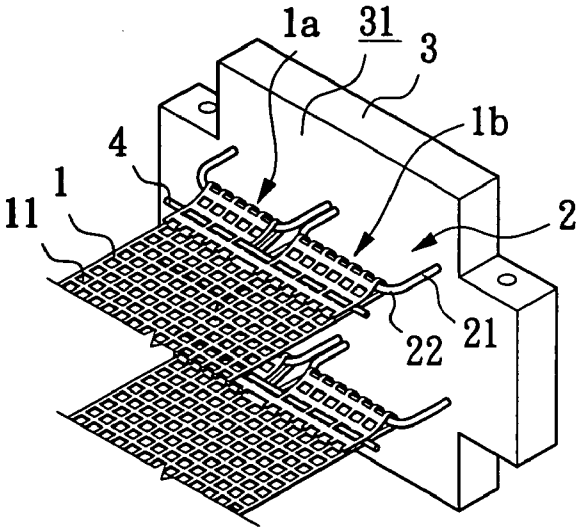

FIG.2

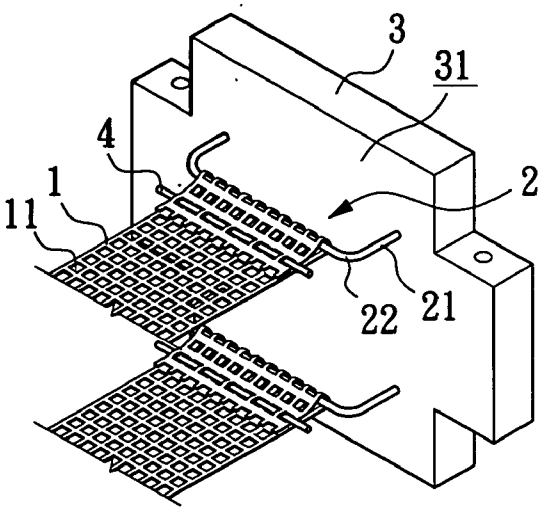

FIG.3

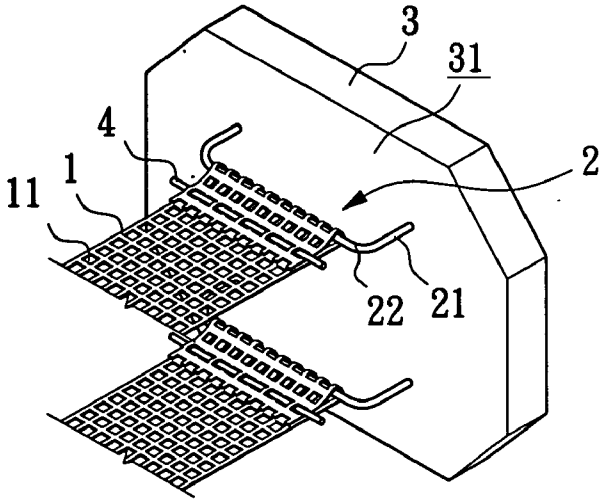

FIG.4

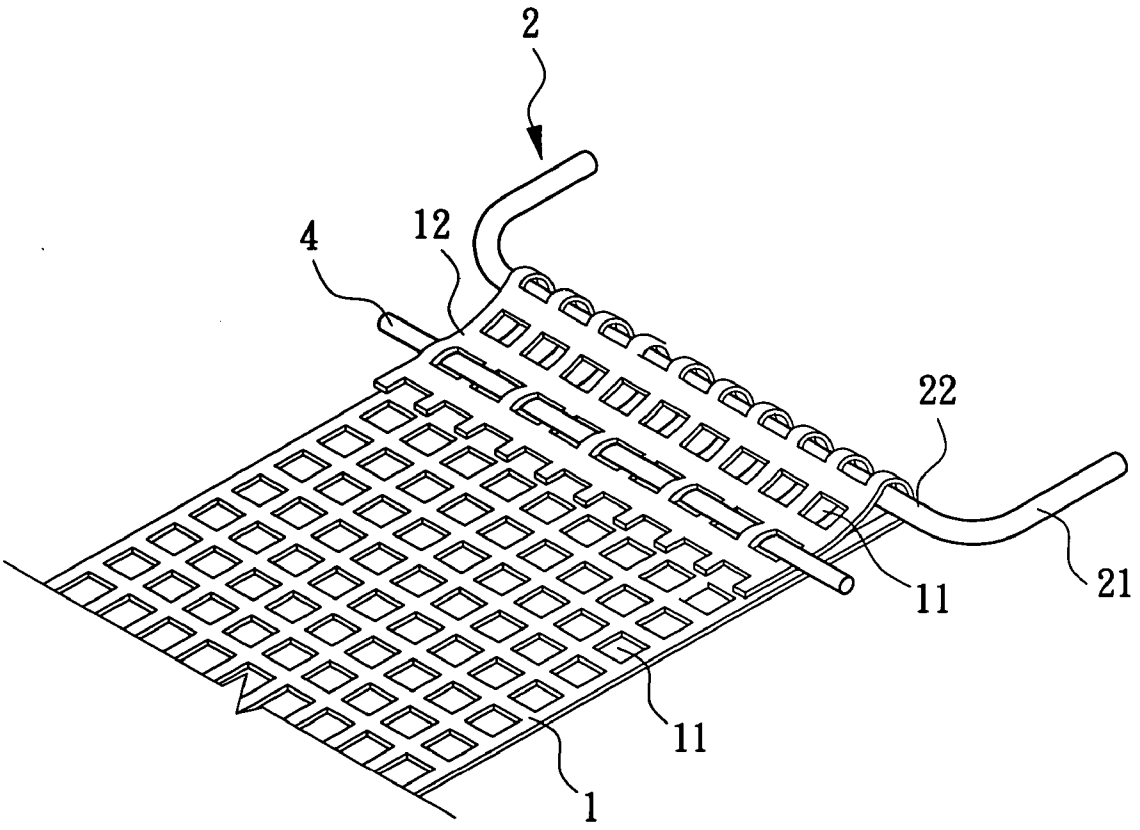

FIG.5

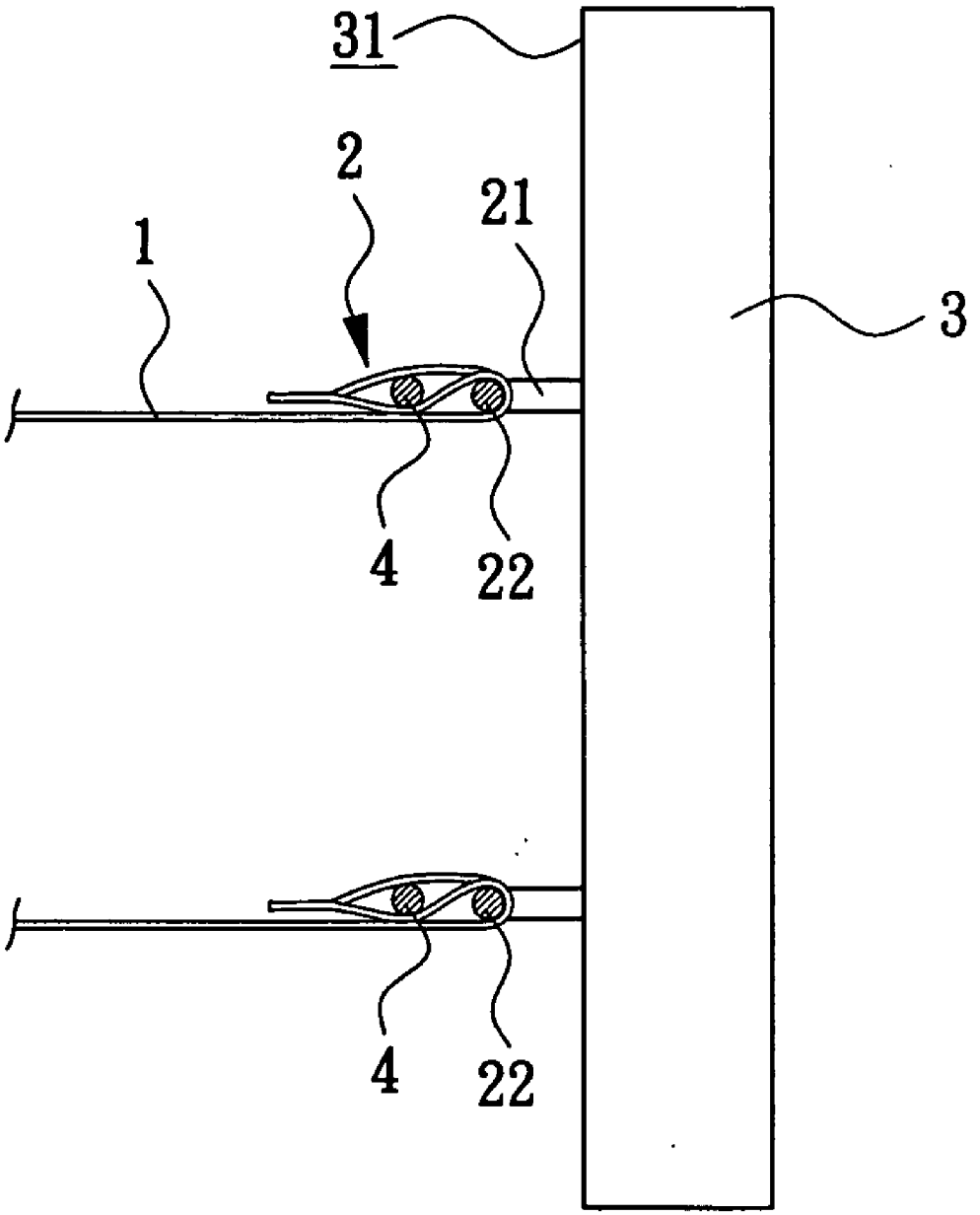

FIG.6

LATTICED NET STRETCHING AND FIXING STRUCTURE

FIELD OF THE INVENTION

[0001] The present invention relates to a latticed net, and more particularly to a latticed net stretching and fixing structure.

BACKGROUND OF THE INVENTION

[0002] A latticed net is frequently used in various construction fields, including civil and architectural engineering, building construction, road construction, slope wall construction, road embankment construction, etc. The latticed net advantageously provides a roadbed with increased shear strength and penetration resistance. Therefore, the technique of mounting the latticed net has been gradually adopted in the high-quality road construction.

[0003] For instance, in the reinforced road embankment structure, a plurality of precast wall panels are erected at the road embankments at two sides of a roadbed. On the inner wall surface of each precast wall panel, there is a reinforcing net connect thereto. Whenever a layer of reinforcing net has been connected, a layer of banking material is spread over the reinforcing net. One of the important things in the reinforced roadbed construction is the firm connection of the reinforcing net to the precast wall panel. In the event of failing to firmly connect the reinforcing net to the precast wall panel, the reinforcing net will be useless in the reinforced road embankment construction.

[0004] In fact, there is currently not any good design for fixing the reinforcing net to the precast wall panel, resulting in a largely reduced effect of the reinforcing net in construction works.

SUMMARY OF THE INVENTION

[0005] A primary object of the present invention is to provide a latticed net stretching and fixing structure to enable a firm connection of the reinforcing net to a vertical wall surface of the precast wall panel.

[0006] To achieve the above and other objects, the latticed net stretching and fixing structure according to the present invention includes at least one fixing element fixedly mounted onto a vertical wall surface of a precast wall panel and having at least one horizontal section; at least one latticed net having a plurality of arrayed meshes and a winding section provided at one end thereof for winding around the horizontal section of the fixing element to overlap the latticed net, with the meshes on the winding section aligned with the meshed on the latticed net; and at least one transverse bar for weaving through the aligned meshes on the overlapped winding section and latticed net to thereby fix the latticed net to the fixing element, allowing the latticed net to be stretched and pulled in a direction opposite to the precast wall panel without separating from the fixing element.

BRIEF DESCRIPTION OF THE DRAWINGS

[0007] The structure and the technical means adopted by the present invention to achieve the above and other objects can be best understood by referring to the following detailed description of the preferred embodiments and the accompanying drawings, wherein

[0008] **FIG. 1** is a perspective view showing a first example of connecting a latticed net to a precast wall panel using the stretching and fixing structure of the present invention;

[0009] **FIG. 2** is a perspective view showing a second example of connecting a latticed net to a precast wall panel using the stretching and fixing structure of the present invention;

[0010] **FIG. 3** is a perspective view showing a third example of connecting a latticed net to a precast wall panel using the stretching and fixing structure of the present invention;

[0011] **FIG. 4** is a perspective view showing a fourth example of connecting a latticed net to a precast wall panel using the stretching and fixing structure of the present invention;

[0012] **FIG. 5** is an enlarged perspective view showing the manner of connecting an end of the latticed net to a horizontal section of a fixing element mounted onto the precast wall panel; and

[0013] **FIG. 6** is a side view showing the manner of connecting an end of the latticed net to the horizontal section of the fixing element mounted onto the precast wall panel.

DETAILED DESCRIPTION OF THE PREFERRED EMBODIMENTS

[0014] Please refer to **FIG. 1** that shows a first example of connecting an end of a latticed net **1** to a vertical wall surface **31** of a precast wall panel **3** via a net stretching and fixing structure **2** according to the present invention. The end of the latticed net **1** connected to the net stretching and fixing structure **2** may be then used as a fixed end, allowing the latticed net **1** to be stretched and pulled from the fixed end in a direction opposite to the wall surface **31**.

[0015] The net stretching and fixing structure **2** includes at least one fixing element **21**, which is fixedly mounted onto the vertical wall surface **31** of the precast wall panel **3**. The fixing element **21** includes at least one horizontal section **22**.

[0016] In the first example of using the net stretching and fixing structure **2** to connect the latticed net **1** to the precast wall panel **3** as illustrated in **FIG. 1**, there are four latticed nets **1** arranged in two vertically spaced rows to connect to the vertical wall surface **31** of one precast wall panel **3**. In other words, there are four fixing elements **21** in two rows being parallelly mounted onto the vertical wall surface **31** of the precast wall panel **3**, and each of the fixing elements **21** includes a horizontal section **22**, to which an end of one latticed net **1** is connected to thereby fix the latticed net **1** to the vertical wall surface **31**.

[0017] The latticed nets **1** may be fixed to the vertical wall surface **31** in different manners according to actual need. **FIG. 2** shows a second example of using the net stretching and fixing structure **2** to connect the latticed net **1** to the precast wall panel **3**. In the second example, there are four fixing elements **21** in two vertically spaced rows mounted onto the vertical wall surface **31** of the precast wall panel **3**, and each of the four fixing elements **21** includes a horizontal section **22**. Each of the latticed nets **1** is split at the end connected to the fixing element **2** into two laterally adjacent

secondary net **1***a*, **1***b*, such that each secondary net **1***a*, **1***b* is separately connected to the horizontal section **22** of one fixing element **21**.

[0018] In **FIG. 3**, there is shown a third example of using the net stretching and fixing structure **2** to connect the latticed net **1** to the precast wall panel **3**. In the third example, there are only two vertically spaced fixing elements mounted onto the vertical wall surface **31** of the precast wall panel **3**.

[0019] The precast wall panel **3** may have different configurations depending on actual need. **FIG. 4** shows a fourth example of using the net stretching and fixing structure **2** to connect the latticed net **1** to the precast wall panel **3**. In the fourth example, the precast wall panel **3** has a polygonal configuration instead of the general rectangular configuration.

[0020] **FIGS. 5 and 6** are enlarged perspective and side views, respectively, showing the manner of connecting an end of the latticed net **1** to the horizontal section **22** of the fixing element **21** mounted onto the precast wall panel **3**. As shown, the latticed net **1** includes a plurality of arrayed meshes **11**. The size of the meshes **11** may be determined depending on the site at where the latticed net **1** is to be used. The latticed net **1** may be made of a polyester cellulose material or other suitable materials. To connect the latticed net **1** to the fixing element **21**, a winding section **12** at an end of the latticed net **1** is wound around the horizontal section **22** to overlap the latticed net **1**, with meshes **11** on the winding section **12** aligned with meshes **11** on the latticed net **1**. Then, a transverse bar **4** is used to weave through the meshes **11** correspondingly located on the section **12** and the latticed net **1** to fix the winding section **12** to the latticed net **1**. It is possible for the transverse bar **4** to connect the winding section **12** to the latticed net **1** by weaving through the aligned meshes at intervals of two meshes or several meshes.

[0021] The winding section **12** may have different lengths. When the winding section **12** is relatively long, two parallel transverse bars **4** may be used to weave through the overlapped section **12** and latticed net **1**.

[0022] When the winding section **12** has been fixed to the latticed net **1** using the transverse bar **4**, the latticed net **1** may be then stably and tensely stretched outward from the horizontal section **22** of the fixing element **21**.

[0023] With the latticed net stretching and fixing structure provided by the present invention, the latticed net **1** could be firmly connected to the precast wall panel **3** to meet the safety requirements in construction, and can therefore be used in various construction works in the civil and architectural engineering field, including building construction, road construction, slope wall construction, road embankment construction, etc., to provide expected high construction quality.

What is claimed is:

1. A latticed net stretching and fixing structure, comprising:

at least one fixing element adapted to firmly mount onto a vertical wall surface of a precast wall panel, said fixing element including at least one horizontal section;

at least one latticed net, each of which includes a plurality of arrayed meshes, and has a winding section provided at an end thereof for winding around said horizontal section of said fixing element to overlap said latticed net, with said meshes on said winding section aligned with said meshes on said latticed net; and

at least one transverse bar adapted to fix said winding section to said latticed net by weaving through said aligned meshes;

whereby when said fixing element has been mounted onto said vertical wall surface of said precast wall panel and said winding section of said latticed net has been wound around said horizontal section of said fixing element to overlap said latticed net, said at least one transverse bar may be woven through said aligned meshes to fix said winding section to said latticed net and thereby connects said latticed net to said fixing element, allowing said latticed net to be stretched and pulled in a direction opposite to said precast wall panel without separating from said fixing element.

2. The latticed net stretching and fixing structure as claimed in claim 1, wherein two pieces of said fixing elements are parallelly mounted onto said vertical wall surface of said precast wall panel side by side, and each of said two fixing elements has one said latticed net connect thereto.

3. The latticed net stretching and fixing structure as claimed in claim 1, wherein two pieces of said fixing elements are parallelly mounted onto said vertical wall surface of said precast wall panel side by side, and wherein each of said latticed net is split at said end connected to said fixing element into two secondary nets, such that each of said two fixing elements has one said secondary net connect thereto.

4. The latticed net stretching and fixing structure as claimed in claim 1, wherein said transverse bar weaves through said aligned meshes on said overlapped winding section and latticed net at intervals of two meshes.

5. The latticed net stretching and fixing structure as claimed in claim 1, wherein said transverse bar weaves through said aligned meshes on said overlapped winding section and latticed net at intervals of more than two meshes.

6. The latticed net stretching and fixing structure as claimed in claim 1, wherein said winding section has an extended length and wherein two pieces of said transverse bars are used to parallelly weave through said aligned meshes on said overlapped winding section and latticed net.

* * * * *