May 30, 1967 B. KAZAN 3,322,999

IMAGE-INTENSIFIER TUBE

Filed Nov. 18, 1963

Fig. 1

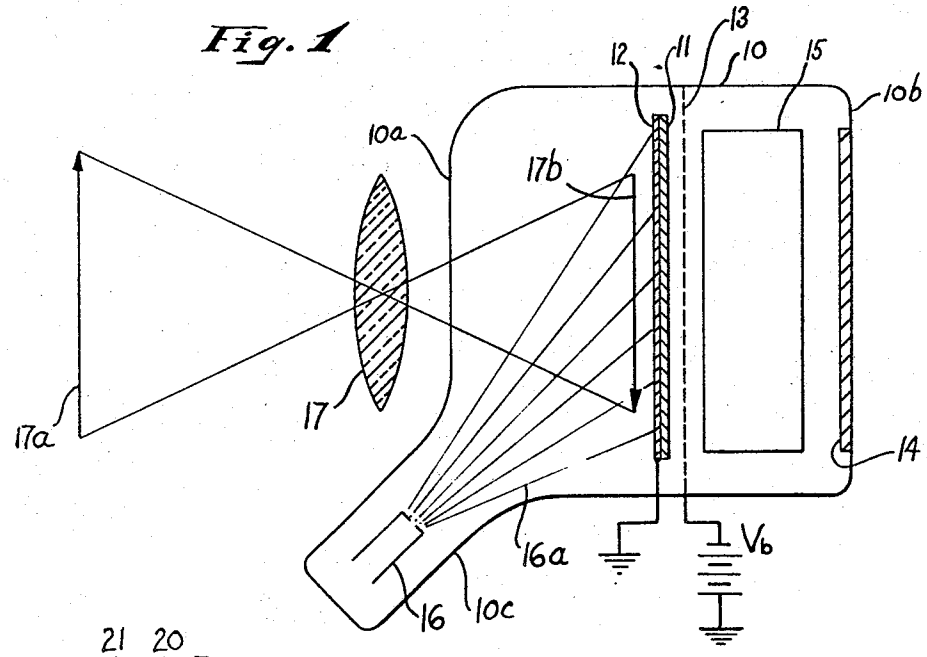

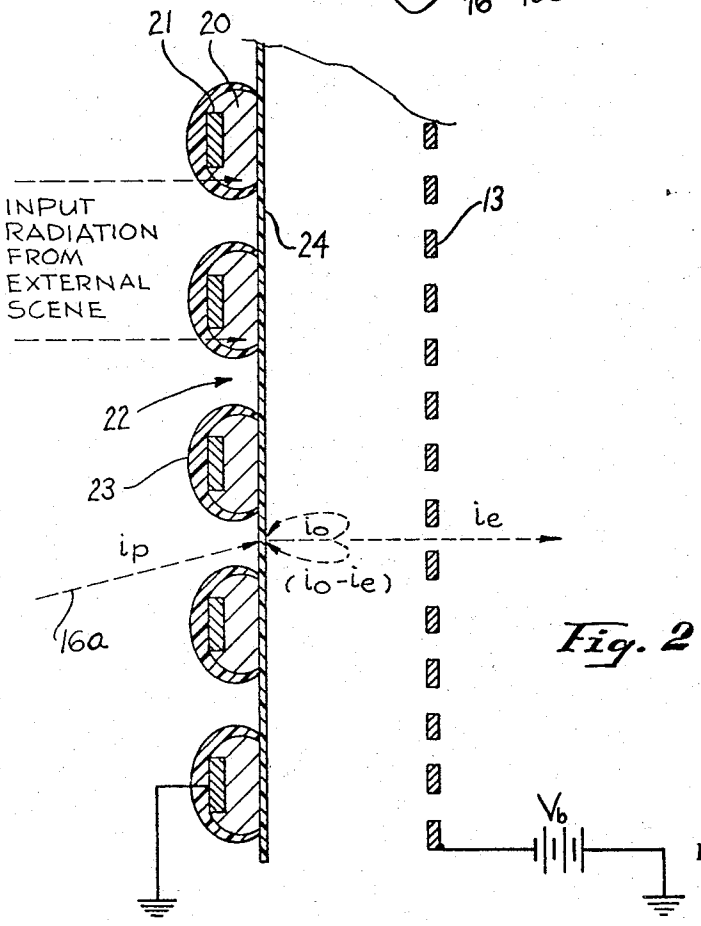

Fig. 2

BENJAMIN KAZAN
INVENTOR.

BY Allen E. Botney

ATTORNEY

United States Patent Office 3,322,999 Patented May 30, 1967

3,322,999

IMAGE-INTENSIFIER TUBE

Benjamin Kazan, Los Angeles, Calif., assignor to Electro-Optical Systems, Inc., Pasadena, Calif.

Filed Nov. 18, 1963, Ser. No. 324,499
7 Claims. (Cl. 315—12)

The present invention relates to image-intensifier tubes in general and more particularly relates to a tube of the kind mentioned in which a photoconductive rather than a photoemissive layer is employed to provide the initial electron image.

One of the important advantages of the vacuum tube image intensifier is the fact that it permits high amplification factors to be obtained through the use of secondary-emission multiplication. One example of such amplification is in the Astracon tube in which several thin insulating layers are employed to generate successive electron images at successively higher intensities. Specific information as to amplification in such a tube may be obtained by referring to Westinghouse Electric Development Device Tentative Data, No. WX–4342, dated March 14, 1960. In such tubes, sufficient gain is available so that the low-level operation is limited only by the thermal emission of electrons from the photocathode. However, present image-intensifier tubes are dependent on the use of photoemissive cathodes for the input surface. Accordingly, despite the high gains available, the long wavelength operation of these tubes is severely limited because of the inherent properties of present-day photocathodes whose spectral response does not extend much beyond one micron and whose quantum efficiency at this wavelength is less than one percent.

By comparison with photoemissive surfaces, photoconductive layers of different types are available that have sensitivities extending to varying degrees into the regions beyond the visible spectrum. At the same time, such materials exhibit quantum gains much greater than unity. However, since the photo-conductive process, by nature, is an internal effect, it does not directly lend itself to processes involving electron flow in a vacuum. In more specific terms, although vacuum tube arrangements have been devised incorporating photoconductive layers, these layers control factors such as the landing density or energy of the electrons reaching the surface but do not control the emission of electrons from or through their surface.

It is, therefore, an object of the present invention to provide means by which a sensitive photoconductive layer can be used in an image tube in such a way that a pattern of photo currents will produce a corresponding pattern of vacuum currents which can subsequently be amplified and viewed.

It is another object of the present invention to provide an image-intensifier tube capable of operating in the visible, infra-red ultraviolet and X-ray regions.

It is a further object of the present invention to materially increase the gain of image-intensifier tubes.

As will be explained in detail below, the basic principle of the present invention involves two phenomena, namely, the generation of vacuum currents and the modulation of such currents. To generate the electron current transmission, secondary emission is employed from a thin layer (either the photoconductor itself or an auxiliary thin insulator). On the other hand, for controlling the flow of these currents, use is made of the change in surface potential of the photoconductor caused by incident illumination. This surface potential, in turn, controls the decelerating field between the surface or portion of the photoconductor where secondary electrons are emerging and the mesh **13**. Because of the velocity spread of the secondary electrons, the fraction of secondary electrons

able to pass through the mesh holes will depend upon the decelerating field between the photoconductor and the mesh.

More particularly, in embodying the invention, a photoconductive layer is provided on one side of a fine metallic film maintained at ground potential. Close to the photoconductor material is a metallic mesh or reference grid whose potential is V_b. In operation, an external scene is imaged on the photoconductive layer, thereby causing local variations in its conductivity. At the same time, the metal side of the photoconductor material is uniformly flooded with electrons. Assuming that the energy of the electrons is sufficiently high and that the photoconductive layer is sufficiently thin, secondary electrons will be released from the opposite side of the photoconductor material, the amount of secondary-electron current passing through the abovesaid reference grid and into the secondary emission image-amplifying section being controlled by the abovesaid variations in conductivity.

The novel features which are believed to be characteristic of the invention, both as to its organization and method of operation, together with further advantages thereof, will be beter understood from the following description considered in connection with the accompanying drawing in which an embodiment of the invention is illustrated by way of example. It is to be expressly understood, however, that the drawing is for the purpose of illustration and description only and is not intended as a definition of the limits of the invention.

FIGURE 1, schematically illustrates an embodiment of a photoconductively-controlled image-intensifier tube according to the present invention; and

FIGURE 2 illustrates another photoconductive arrangement that may be used in such a tube.

Referring now to the drawing and in particular to FIG. 1, the evacuated envelope of the image-intensifier tube shown therein is designated **10**, the transparent front and back faces or sides of the envelope respectively being designated **10*a*** and **10*b***. Between faces **10*a*** and **10*b*** and substantially parallel to them is mounted a sandwich arrangement of two layers, one a thin layer of photoconductive material **11**, of the order of a micron in thickness, and the other a thin metallic film or layer **12** that is thin enough to permit light to pass through it to the photoconductive layer on its other side. Although photoconductive materials are well known, by way of example, layer **11** may be made of a material such as cadmium sulphide or cadmium selenide and may be either in the porous or solid form. As for metal layer **12**, it may be made of metals such as gold or aluminum and, as is shown in the figure, is preferably held at ground potential.

Face-to-face with photoconductive layer **11** and close to it is a metal mesh or reference grid **13** whose potential is maintained at V_b. On the inside surface of faceplate **10*b***, there is coated a cathode luminescent phosphor layer **14** that produces a light image for viewing purposes in response to a corresponding electron-beam image incident thereon. Between grid **13** and phosphor layer **14** there is mounted a secondary emission image-amplifying section **15** whose function it is, by means of secondary-emission techniques, to generate successive electron images at successively higher intensities. In essence, image-amplifying section **15** is a secondary emission image intensifier or multiplier and apparatus of this kind is known in the art. For example, apparatus that may be used as the image amplifying section is disclosed on pages 126–132 of the periodical entitled "IRE Transactions on Nuclear Science," June-September 1960 issue, the article disclosing the apparatus being authored by Messrs. W. L. Wilcock, D. L. Emberson, and B. Weekly and entitled "Work at Imperial College on Image Intensifiers

With Transmitted Secondary Electron Multiplication." Another full disclosure of such apparatus is contained in the book entitled "Image Intensifier Symposium," October 6–7, 1958, published by the Warfare Vision Branch, Electrical Engineering Department, U.S. Army Engineer Research and Development Laboratories, Fort Belvoir. More specifically, the disclosure is on pages 33–44 in an article entitled "The Transmission Secondary Emission Image Intensifier" by Messrs. M. M. Wachtel, D. D. Doughty and A. E. Anderson.

At the front part of tube **10**, located in a neck **10***c* thereof, is an electron-gun arrangement, generally designated **16**, for producing and focusing a uniform beam of electrons **16***a* onto layer **12**. Arrangement **16** is conventional and, therefore, its details are not shown. Suffice it to mention, therefore, that arrangement **16** includes the usual cathode, control electrode, accelerating and focusing electrodes, etc. It should also be mentioned that the energy of the electrons at metal layer **12** should be high enough, for example in the order of 5000 electron volts, to insure that they will penetrate the metal layer to photoconductive layer **11**.

Finally, a lens arrangement **17** is mounted in front of tube face plate **10***a*, the lens arrangement being the means by which an external scene or image **17***a* is focused on metal layer **12** as image **17***b*. As was previously mentioned, the metal layer is thin enough so that image **17***b* penetrates it to photoconductive layer **11**.

In its operation, external image **17***a* is projected through metal layer **12** and onto photoconductive layer **11** as image **17***b*, thereby causing local variations in the conductivity or, stated differently, in the surface potential of the photoconductor. At the same time, metal layer **12** is uniformly flooded with electrons from electron beam **16***a* generated by electron-gun arrangement **16**, the electron bombardment and the incident illumination, in combination, causing a pattern of secondary electrons to be released from the opposite side of the photoconductive layer that corresponds to light image **17***b*. This pattern of electrons passes through reference grid **13** to secondary emission image-amplifying section **15** wherein, as previously stated, successive electron images at successively higher intensities are generated. The last electron image thusly generated is projected against phosphor layer **14** which, in response thereto and as is well known, produces a corresponding light image that can be viewed through face plate **10***b*. Because a photoconductive rather than a photoemissive material is used herein, by properly designing the tube an output image may be obtained when the original external image is either in the visible, infra-red, ultra-violet or X-ray regions.

Furthermore, it should be noted that various modes of operation are possible. For example, if the bias V_b on reference grid **13** is negative, then the output current decreases with increases in input radiation which is to say that the intensity at any point of the output image varies inversely as the intensity of the corresponding point on the input image. On the other hand, if instead of applying a negative bias voltage to the reference grid, the grid is maintained at ground potential, then the output current increases with increases in input radiation, that is to say, the intensity at any point on the output image varies directly as the intensity of the corresponding point on the input image.

It should also be noted that a metal mesh may be substituted for solid metal layer **12** in the photoconductive target structure with equally good effect. An alternative photoconductive target structure employing such a metal mesh is illustrated in cross-section in FIG. 2 wherein the photoconductive layer, designated **20**, is provided, for example, by evaporation onto an electroformed metal mesh **21** which may have as many as 500 holes to the inch. This metal mesh is grounded. By evaporation from suitable angles, the photoconductor may be made to extend partially into the mesh openings **22**, as is shown in

the figure. In this arrangement, because of the mesh holes and absence of photoconductor in these holes, primary electrons can pass through these holes instead of having to pass through the continuous layers of material **11** and **12** of FIG. 1. The requirement that the mesh **21** and photoconductor **20** of FIG. 2 be sufficiently thin to enable electron penetration is not necessary here as is the case in FIG. 1. However, since secondary electrons are not generated by the passage of primary electrons through the photoconductor **20**, a separate thin layer **24** is provided. This layer is exposed to the primary electrons, I_p, where they penetrate the mesh holes so that secondary electrons, I_0, are generated from the opposite surface of layer **24**. The layer **24** may consist, for example, of aluminum oxide (Al_2O_3), about 500–1000 Angstroms thick. Although not essenial to the operation, the photoconductor **20** and mesh **21** may be coated with a layer of transparent insulating material **23** which may, for example, be magnesium fluoride (MgF_2). The purpose of this coating is to prevent conductivity from being induced in the photoconductor where it is bombarded by the primary electrons. Reference grid **13**, also shown in FIG. 2, is, as before, maintained at potential V_b.

In operation, the primary electrons, I_p, arriving at the film **24** tend to charge the surface negative, the potential of mesh **13** being assumed negative. Because of this potential, a steady dark current flows from the film **24** through the photoconductor **20** to the mesh **21**. (By bombardment-induced conductivity, the electron-bombarded areas of the thin-film insulator **24** are made sufficiently conductive to electrically connect them to the adjacent regions of the photoconductor.) At the same time, because of the limited emission energies of the secondaries, only a fraction, I_e, can reach the mesh **13** (assumed to be more negative than the film **24**), and penetrate it. The remaining electrons, namely, I_0–I_e, are returned to the film **24**. When incident light falls on the photoconductor **20**, its resistance is lowered so that the potential of the adjacent areas of the film **24** is made less negative. As a result of this, the decelerating field between the local area of film **24** and the mesh **13** is increased and, therefore, a greater fraction, I_e, of the secondaries can penetrate the mesh.

Although a couple of arrangements of the invention have been illustrated above by way of example, it is not intended that the invention be limited thereto. For example, although secondary-emission image amplifying section **15** improves the performance of the tube, the section is nevertheless not indispensable in the sense that the tube will function or operate without it. Accordingly, the invention should be considered to include any and all modifications, alterations or equivalent arrangements falling within the scope of the annexed claims.

Having thus described the invention, what is claimed is:

1. In an image-intensifier tube having transparent front and rear face plates, apparatus mounted in said tube between said face plates, said apparatus comprising: a target element including photoconductive and electrically conductive layers back-to-back, and means for bombarding said conductive layer with a uniform beam of electrons; radiation energy focusing means for forming an image of an external scene on said conductive layer; a reference grid spaced from and in face-to-face relationship with said photoconductive layer; a phosphor layer on the faceplate of said tube facing said reference grid; and a secondary emission image-amplifying section mounted between said reference grid and said phosphor layer.

2. The image-intensifier tube defined in claim **1** wherein said electrically conductive layer and said reference grid are maintained at ground potential.

3. In an image-intensifier tube having transparent front and rear face plates, apparatus mounted in said tube between said face plates, said apparatus comprising: a

target element including at least photoconductive and electrically conductive layers back-to-back, said conductive layer being maintained at ground potential; a reference grid spaced from and in face-to-face relationship with said target element, said reference grid being maintained at a potential that is not greater than ground potential; and a secondary emission image-amplifying section mounted between said reference grid and the tube faceplate.

4. An image-intensifier tube comprising: a target element including at least photoconductive and electrically conductive layers back-to-back, said conductive layer being maintained at ground potential and thin enough for radiation to pass through; a reference grid spaced from and in face-to-face relationship with said target element, said reference grid being maintained at a potential that is not greater than ground potential; means for bombarding said conductive layer with a uniform beam of electrons; and radiation energy focusing means for forming an image of an external scene on said conductive layer.

5. Image-intensifier apparatus comprising: a vacuum tube having transparent front and rear faceplates; a target element mounted between said faceplates and substantially parallel therewith, said target element including at least photoconductive and electrically conductive layers back-to-back with the conductive layer focusing the front faceplate, said conductive layer being adapted to permit radiation to pass through to said photoconductive layer; a reference grid spaced between said rear faceplate and said target element and in face-to-face relationship therewith, said reference grid being maintained at a potential that is not greater than ground potential; means for bombarding said conductive layer with a uniform beam of electrons; radiation energy focusing means for forming an image of an external scene on said conductive layer; and a phosphor layer deposited on said rear faceplate.

6. Image-intensifier apparatus comprising: a vacuum tube having transparent front and rear faceplates; a target element mounted between said faceplates and substantially parallel therewith, said target element including insulating, photoconductive and electrically conductive layers in a sandwich arrangement with the photoconductive layer therebetween, said conductive and photoconductive layers having holes therethrough to permit electrons to pass through to said insulative layer, said conductive layer being maintained at ground potential; a reference grid spaced from said insulative layer and face-to-face therewith, said reference grid being maintained at a potential that is not greater than ground potential; means for bombarding the conductive side of said target element with a uniform beam of electrons; radiation energy focusing means for forming an image of an external scene on the conductive side of said target element; and a phosphor layer deposited on said rear faceplate.

7. In an image-intensifier tube having transparent front and rear face plates, apparatus mounted in said tube between said face plates, said apparatus comprising: a target element including photoconductive and electrically conductive layers back-to-back, and means for bombarding said conductive layer with a uniform beam of electrons, said conductive layer being maintained at ground potential; and radiation energy focusing means for forming an image of an external scene on said conductive layer; a reference grid spaced from and in face-to-face relationship with said photoconductive layer, said reference grid being maintained at a negative potential; a phosphor layer on the face plate of said tube facing said reference grid; and a secondary emission image-amplifying section mounted between said reference grid and said phosphor layer.

References Cited

UNITED STATES PATENTS

2,927,234 3/1960 Kazan ---------- 313—65

JOHN W. CALDWELL, *Acting Primary Examiner.*

T. A. GALLAGHER, *Assistant Examiner.*