April 19, 1927. 1,625,471

R. J. JAUCH

TUBE IRONING AND GRIPPING DEVICE

Filed April 28, 1926 3 Sheets-Sheet 1

Fig. 2

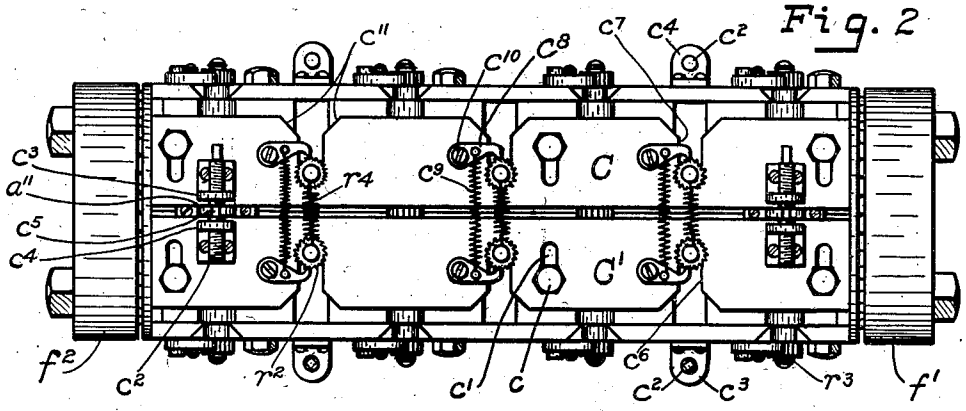

Fig. 1

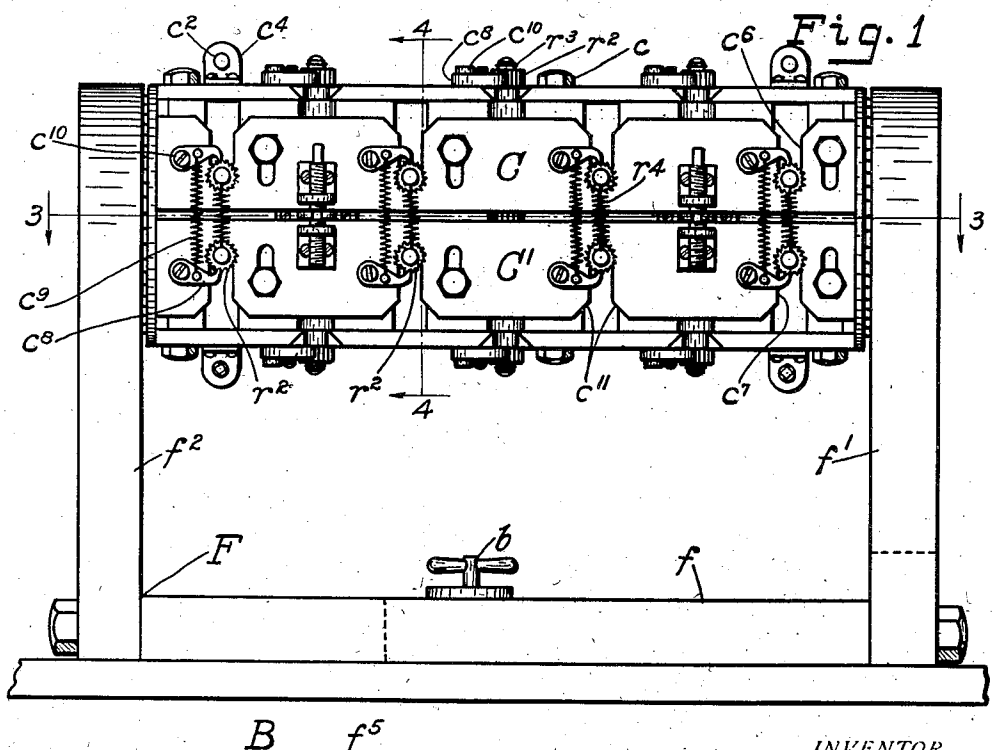

INVENTOR
Robert J. Jauch
BY
Walter A. Knight
ATTORNEY

April 19, 1927. 1,625,471

R. J. JAUCH

TUBE IRONING AND GRIPPING DEVICE

Filed April 28, 1926 3 Sheets-Sheet 2

Fig. 3

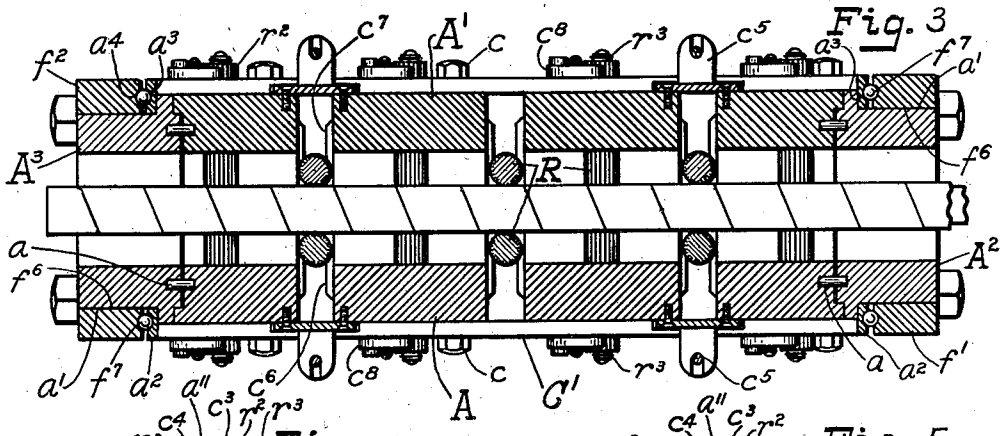

Fig. 4

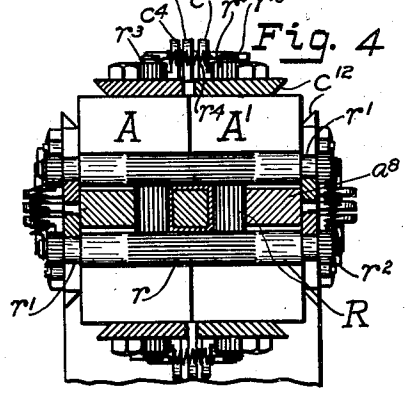

Fig. 5

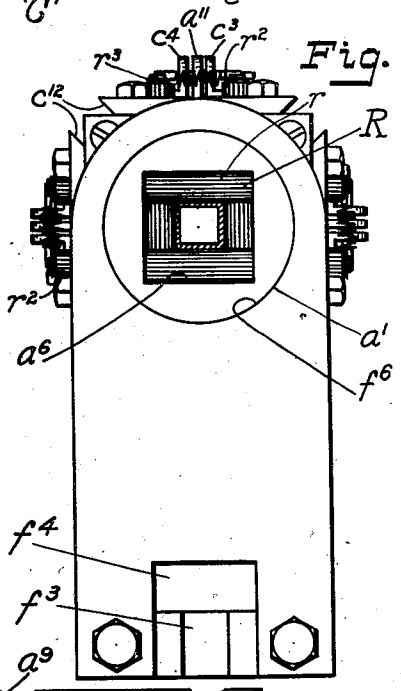

Fig. 6

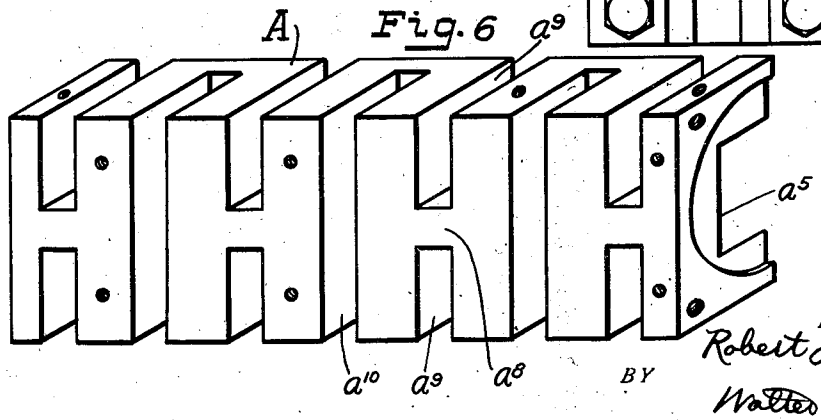

INVENTOR
Robert J. Jauch
BY
Walter a. Knight
ATTORNEY

April 19, 1927. 1,625,471

R. J. JAUCH

TUBE IRONING AND GRIPPING DEVICE

Filed April 28, 1926 3 Sheets-Sheet 3

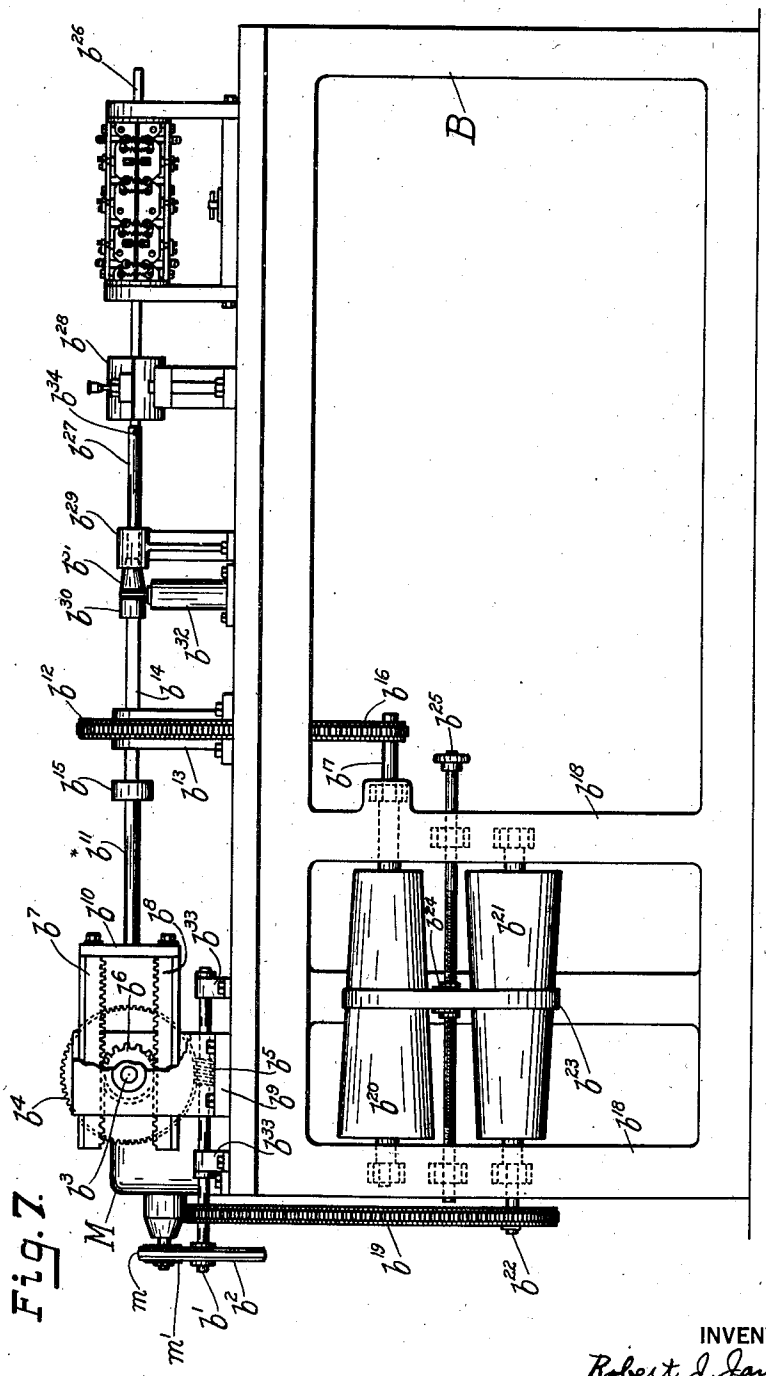

Fig. 7.

INVENTOR
Robert J. Jauch
BY
Walter A. Knight
his ATTORNEY

Patented Apr. 19, 1927. 1,625,471

UNITED STATES PATENT OFFICE.

ROBERT J. JAUCH, OF FORT-WAYNE, INDIANA.

TUBE IRONING AND GRIPPING DEVICE.

Application filed April 28, 1926. Serial No. 105,130.

This invention relates to machines for making paper tubes and more particularly to ironing and gripping devices for same.

The present invention is especially applicable to paper tube-making machines of the type set forth in my application filed July 6th, 1925, Serial No. 41,561, for paper tube-making machines, which comprises a simultaneously rotating reciprocating mandrel, on the protrusion stroke of which paper in strip form is wound spirally on said mandrel to form a tube, and gripping means for holding the paper tube during the retraction of the mandrel. The gripping means set forth in the present application constitute an improvement over that shown in the original application.

The principal object of my invention is to grip the tube formed on the mandrel so as to hold it in position while the mandrel is being retracted.

Another object of my invention is to permit the manufacture of paper tubes of any desired length.

Another object of my invention is to iron the tube on the mandrel as it is formed and while still damp and thus to ensure the formation of a tube conforming strictly to the shape of the mandrel, as, for instance, to form a square tube on a square mandrel, or a hexagonal tube on a hexagonal mandrel, the sides of which tube will be flat and its edges true.

Another object of my invention is to provide an ironing and gripping device capable of being readily adjusted to a plurality of sizes of mandrels and without disassembling the device.

Another object of my invention is to provide a gripping device adapted to co-act with mandrels of a large number of cross sectional shapes as, for instance, square, octagonal, rectangular parallelograms whose non-parallel sides are of unequal length, etc.; or triangles, hexagons, etc.

In the particular embodiment of my invention selected for illustration:—

Figure 1, is a side elevation of my ironing and gripping device adapted to be used in connection with a square mandrel or one of other rectangular shape in cross section;

Fig. 2, is a top plan view of the same;

Fig. 3, is a longitudinal section on the line 3—3 of Fig. 1, with an equivalent length of square mandrel shown therein in full lines;

Fig. 4, is a cross section on the line 4—4 of Fig. 1 with a square mandrel and tube shown in gripped position and with part of the supporting frame broken away;

Fig. 5, is an end view of the device;

Fig. 6, is a perspective of one of the two body members;

Fig. 7 is a side elevation of a tube winding machine equipped with the tube ironing and gripping device which is the subject of this application.

The invention disclosed in this application is used in conjunction with a tube winding machine comprising a bed or table B to which are secured the various parts of the machine. Upon this table are disposed a pair of fixed bearings b^{33} in which is rotatably mounted a drive shaft b^1 that is actuated by a motor M through the medium of a belt m and pulleys m^1 and b^2.

A reciprocating driver is mounted on the table so as to be actuated by the drive shaft b^1 and consists of a counter shaft b^3 having thereon a worm wheel b^4 that is actuated by the worm b^5 on the drive shaft b^1.

The counter shaft has fixed thereon a mutilated gear b^6 that is actuated alternately with a pair of spaced rack bars b^7 b^8. The counter shaft b^3 and the rack bars b^7 b^8 have bearing supports respectively in a standard b^9 on the table, and the forward ends of said rack bars have rigidly fixed thereto a cross head b^{10} which has a forwardly extending rigid stem b^{11}.

A rotary driver is mounted upon the table and consists of a sprocket wheel b^{12} mounted in a standard b^{13} and through the hub of which a square connecting rod b^{14} extends and has longitudinal sliding movement. The square connecting rod b^{14} is disposed in longitudinal alignment with the stem b^{11} on the reciprocating driver and is connected to said stem by a coupling b^{15}, having thereon any suitable bearing (not shown) that admits of rotating of the connecting rod b^{14} relative to the stem b^{11}.

The rotary driver is actuated by a chain b^{16} on the sprocket wheel b^{12} and which is connected with a variable speed motion transmitter mechanism mounted in the base b^{18} of the table, said mechanism being actuated from the driver shaft b^1 by the chain b^{19}. Said motion transmitter may be of any suitable type by which power may be transmitted from the drive shaft to the rotary driver at selective speeds. In the present instance is shown, for example, a pair of

oppositely disposed cones b^{20} b^{21} mounted upon a corresponding pair of shafts b^{17} and b^{22} and upon which is trained an endless belt b^{23}, there being a belt shifter b^{24} and an adjusting screw shaft b^{25} therefor by which the belt may be moved on the cones longitudinally to various positions.

The chain b^{19} has actuating relation with the shaft b^{22}, and the shaft b^{17} has actuating relation with the chain b^{16}, providing a movement through the medium of a belt from the cone b^{21} to the cone b^{20}, with a speed ratio that is variable according to the longitudinal position of the belt and cones.

By adjustably turning the screw shaft b^{25} the rotary driver will accordingly be operated with more or less velocity relative to the movement of the reciprocating driver.

A square mandrel b^{26}, removably secured to the shank b^{27} by pin b^{34} is mounted in a bearing b^{28} in which the mandrel has longitudinal and rotary movement. The shank b^{27} of the mandrel is round in cross section and extends loosely through the supporting bearing b^{29} in which it has longitudinal and rotary movement.

The connecting rod b^{14} and the shank b^{27} have corresponding clutch members b^{30} and b^{31} respectively fixed thereon so as to abut one another, the abutting faces of said members being toothed so that locking engagement between the clutch members is established when the clutch members are brought together.

The clutch members are so coupled together as to enable a limited longitudinal movement of the shank b^{27} when said clutch members are separated by a vertically moving disengaging member mounted in the hollow post b^{32}.

A supporting frame F with bottom portion f, and uprights f^1, f^2, is adapted to be secured to the bed B of the machine in any suitable manner as by winged bolt b threaded in the bed. The bolt body is adapted to pass into the central vertical slot f^3 in the head end of the bottom member f, extending back to f^5, and the winged portion passes through the opening f^4 in the upright f^1 also at the head end of the frame.

The body of the device is composed of two similar longitudinal portions A, A^1, counterbored at each end to receive a hub member designated as A^2 at one end and A^3 at the other. These hubs are preferably secured by a dowel a entering the end of each body member A, A^1 so that the whole body thus formed of the members A, A^1, A^2, A^3 will form a unit and rotate together on the cylindrical hub ends a^1, a^1. Obviously the whole body may be made of one casting.

The upright members f^1, f^2 of the frame F are bored at f^6, f^6 to form a bearing for the cylindrical portions a^1, a^1 of the hubs A^2, A^3. On the inner sides of the members f^1, f^2 next to the openings f^6, f^6 are formed grooves f^7, f^7 which co-act with grooves a^3, a^3 in retainer rings a^2, a^2, and these with a suitable number of balls a^4 form a thrust bearing for each end of the body. The axial openings a^5 in the body members A, A^1, and a^6 in the hubs A^2, A^3 are made large enough to accommodate the maximum size mandrel intended for that particular gripper.

The body is provided with a plurality of clearance slots across each of its four faces for the gripping rolls hereinafter described, each such slot being formed at right angles to its contiguous slot or slots. Each of these slots has a corresponding slot in alignment with it, extending in from the opposite face, and the slots of each pair are separated from each other at the central portion of the face by a bridge a^8.

Referring particularly to Fig. 6, the slots across the horizontal faces are designated as a^9, a^9, and the slots across the vertical faces as a^{10}. As Fig. 6 shows only one of these body members, the slots a^{10} appear only across the one vertical face shown.

A pair of bearing plates C, C^1 are provided for each face of the body and secured thereto by cap screws c passing through cross slots c^1 and threaded with the body so as to allow adjustment of the bearing plates crosswise of the face. Equal adjustment of said bearing plates C, C^1 from the longitudinal center line of the body face is secured by means of a right and left thread adjusting screw c^2, threaded in brackets c^3, c^4 secured to the members C, C^1 respectively, and positioned by means of a bracket a^{11}, secured to the body at said center line, which bracket a^{11} co-acts with a circumferential groove c^5 in the screw c^2 midway between its right hand thread and its left hand thread.

The bearing plates C, C^1 are provided with pairs of bearing slots c^6, c^7 respectively, in which rest the bearing portions r^1 of the ironing and gripping rolls R, whose tube contacting surfaces r are straight knurled, to prevent slippage of the tube past the rolls when the mandrel is being retracted.

Just outward of the bearing portions r^1 are ratchet wheels r^2, each adapted to contact with a pawl c^8, and each pivoted by a screw c^{10} threaded in a bearing plate, and these pawls are held to contact with the ratchet wheels by coiled spring c^9. The rolls R rotate freely when the mandrel is on its progression stroke and are prevented from counter rotation when the mandrel is on its retraction stroke by the action of the pawls on the ratchet wheels.

Between each end of each roll R and the contiguous ratchet wheel r^2 is a circumfer-

ential groove r^3. A coiled spring r^4 connects the contiguous grooves r^3 of pairs of rolls R, tending to draw said rolls together and causing said rolls to bear with proper force on opposite sides of the newly formed tube as it enters the gripper, giving the ironing action desired and holding the rolls in yielding contact with the tube sides. The larger the surface to be ironed the greater is the pressure of the roll required thereon, and this the springs r^4 increasingly provide as the rolls are spread wider apart to accommodate larger tubes and mandrels. One pair of rolls irons and grips two opposite tube faces and the other pair irons and grips the other opposite tube faces. The ironing should be progressive, that is, the pressure exerted on the rolls at the head end of the device should be the least and that of each succeeding pair greater. Suitable springs are selected to effect this result.

The corners formed by the edges of the bearing plates C, C^1, and the bearing slots c^6, c^7 are cut away sufficiently to permit the rolls to be slipped into place endwise when the bearing plates are in position on the body. These dog-eared corners are designated as c^{11}.

The bearing plates C, C^1 have their outer edges c^{12} beveled underneath so as to afford maximum adjustment thereof outwardly.

When a paper tube has been formed on the outer end of the mandrel by supplying thereto paper in strip form the head end of the ironing and gripping device, that is the end at which f^1 is, is pushed over said mandrel until the rolls R, which have been properly adjusted to the particular mandrel then being used, contact with the sides of the tube, and when in proper position the device is bolted securely to the bed of the tube-making machine. It will be understood that the position of the ironing and gripping device is such that some part of said mandrel is always within the full roll scope of said device. The tube would be crushed and deformed if the rolls were allowed to bear upon a tube from which the mandrel had been withdrawn.

During the progression stroke of the mandrel it is also rotating and the rotation of the mandrel, gripped by the rolls R which rotate freely in that direction, rotates the body of the ironing and gripping device and parts fixed thereto. When the progression stroke has been completed and the mandrel ceases rotating, the body of the ironing and gripping device stops rotating, and as the mandrel is retracted the rolls R, secured against counter rotation by the ratchet wheels r^2 and pawls c^8, grip the tube and hold it securely in place while the mandrel is being withdrawn therefrom.

I do not wish to be limited to the precise form of the device herein illustrated and described, nor with the modification indicated, but conceive as within the scope of my invention all forms of the device readable on the claims.

I claim as my invention and desire to secure by Letters Patent of the United States:—

1. In a device for ironing and gripping a tube formed on a mandrel, means for producing relative reciprocation of said device and mandrel, a plurality of rolls with roughened surfaces mounted in said device and adapted to ride on different surfaces of said tube while it is in position on said mandrel, means for permitting said rolls to rotate freely by contact with the tube surfaces, and means for preventing their counter-rotation on the tube stripping stroke.

2. In a device for ironing and gripping a tube formed on a mandrel, means for producing relative reciprocation of said device and mandrel, means for rotating one of them, a plurality of rolls with roughened surfaces mounted in said device and adapted to ride on different surfaces of said tube while it is in position on said mandrel, means for permitting said rolls to rotate freely by contact with the tube surface on the tube-forming stroke, and means for preventing their counter-rotation on the tube-stripping stroke.

3. In a device for ironing and gripping paper tubes formed on a mandrel of a paper tube-making machine, means for axially reciprocating one of said co-acting devices, means for rotating one of said devices, knurled rolls in said ironing and gripping device adapted to ride on different faces of said tube while it is in position on said mandrel, means for permitting said rolls to rotate freely by contact with the tube surfaces on the tube-forming stroke, and means for preventing their turning in the opposite direction on the tube-stripping stroke.

4. An ironing and gripping device adapted to co-act with the mandrel of a paper tube-making machine, comprising a supporting frame, a rotatable body journalled in said frame, said body having an axial opening through which said mandrel extends, and ironing means supported by said body extending across the axial opening thereof said ironing means free to rotate in one direction only and means for preventing the counter rotation of said ironing means.

5. In an ironing and gripping device adapted to co-act with a mandrel having an even number of sides, said mandrel being part of a paper tube-making machine, which mandrel reciprocates and rotates during its progression stroke but does not rotate during its retraction stroke; a supporting frame, a body rotatably journalled in said supporting frame, an axial opening through

said body through which said mandrel extends, rolls with roughened surfaces arranged in pairs and adapted to rotate on the sides of a tube formed on said mandrel, means for permitting said rolls to be rotated by frictional contact with the sides of said tube on the progression stroke of said mandrel, and means for preventing the counter-rotation of said rolls on the retraction stroke of said mandrel so as to prevent the retraction of said tube with the mandrel.

6. In an ironing and gripping device adapted to be used in combination with the mandrel of a paper tube-making machine which mandrel reciprocates and rotates during its progression stroke but does not rotate during its retraction stroke; a supporting frame, a body rotatably journalled in said supporting frame, an axial opening through said body through which said mandrel extends, rolls with roughened surfaces arranged in groups and adapted to rotate on the sides of a tube formed on said mandrel, means for permitting said rolls to be rotated by frictional contact with the sides of said tube on the progression stroke of said mandrel, and means for preventing the counter-rotation of said rolls on the retraction stroke of said mandrel so as to prevent the retraction of said tube with the mandrel.

7. In ironing and gripping devices to be used with a paper tube-making machine having a longitudinally reciprocating mandrel with rotary movement during its protrusion stroke, a rotatable and longitudinally immovable body member having an axial opening through which said mandrel and tube thereon extend, and means in supported relation with said body member extending into the opening thereof and engaging said tube operable to stop said tube from retracting with said mandrel during the retracting stroke.

8. In an ironing and gripping device in combination with a longitudinally reciprocable and rotatable mandrel operable for the formation thereon of a paper tube, a rotatable and longitudinally immovable body member having an axial opening through which said mandrel and paper tube thereon extend; a series of spring pressed rolls, said rolls being supported in said member and extending transversely in different planes into the opening thereof and bearing upon said paper tube, said rolls being rotatable upon said tube during the forward stroke of said mandrel, and a ratchet mechanism in connection with said rolls operable to prevent counter-rotation of said rolls during the retracting stroke of said mandrel.

9. In an ironing and gripping device in combination with a reciprocating mandrel, a body member having an opening extending therethrough and through which said mandrel extends; and a mechanism including rolls rotatable in one direction only, each roll extending transversely into the opening of said body member and bearing upon said paper tube and being operable to roll upon said tube during the forward stroke of the mandrel to iron said tube and to detain the tube from retracting with the mandrel during the opposite stroke thereof.

10. In an ironing and gripping device in combination with a mandrel having longitudinal reciprocating movement and also rotary movement during one of its longitudinal strokes operable for the formation thereon of a tube from continuous paper strips, a rotatably mounted body having an axial opening through which said mandrel extends; and a roll mechanism supported by said body having rolls rotatable in one direction only that bear upon said paper tube and roll thereon during the forward rotating stroke of the mandrel and detain said tube from retraction with the mandrel during the opposite stroke thereof.

11. An ironing and gripping device for a paper tube-making machine including a mandrel having longitudinal reciprocating movement and also rotary movement during one of its longitudinal strokes for the formation thereon of a paper tube, a rotatably mounted body having an axial opening through which said mandrel extends; rolls supported in said body disposed in successive pairs between which rolls said mandrel extends; springs operable to hold said rolls in bearing contact with said paper tube on the mandrel, those portions of said rolls contacting with said tube being roughened; and a ratchet and pawl mechanism operable in connection with said rolls arranged so as to permit turning of the rolls during the combined rotary and longitudinal stroke of the mandrel and to prevent rotation of the rolls during the retracting stroke of the mandrel whereby said paper tube is ironed on the mandrel by said rolls during its passage therebetween and the tube held so that the mandrel will retract and strip the tube from it.

12. An ironing and gripping device for a paper tube-making machine including a mandrel having axial reciprocating movement and rotary movement during its protrusion stroke for the formation of a paper tube thereon; said ironing and gripping device having in combination, a supporting frame adapted to be secured to the bed of said machine, a rotatable body journalled in said frame, said body having an axial opening through which said mandrel extends, bearing plates supported by said body, a plurality of rolls extending across said axial opening and adapted to bear on different sides of said tube, said bearing surfaces of the rolls having longitudinally knurled slots in said bearing plates in which said rolls

are rotatably mounted, springs adapted to hold said rolls in contact with said tube on the mandrel to iron it thereon during the progression stroke of the mandrel, a ratchet and pawl mechanism for said rolls adapted to permit free turning of said rolls during the progression stroke of said mandrel and to prevent the counter-rotation of the rolls during the retraction stroke of the mandrel to cause the rolls to grip the tube and hold it so that retraction of the mandrel will stop the tube and permit it to be stripped therefrom.

In testimony whereof I have hereunto set my hand.

ROBERT J. JAUCH.