(No Model.) 2 Sheets—Sheet 1.

L. D. HILL.

MILL FOR ROLLING FAN TAIL AXLES.

No. 456,570. Patented July 28, 1891.

Fig. 1.

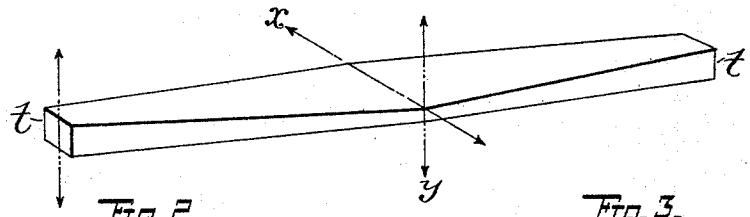

Fig. 2.

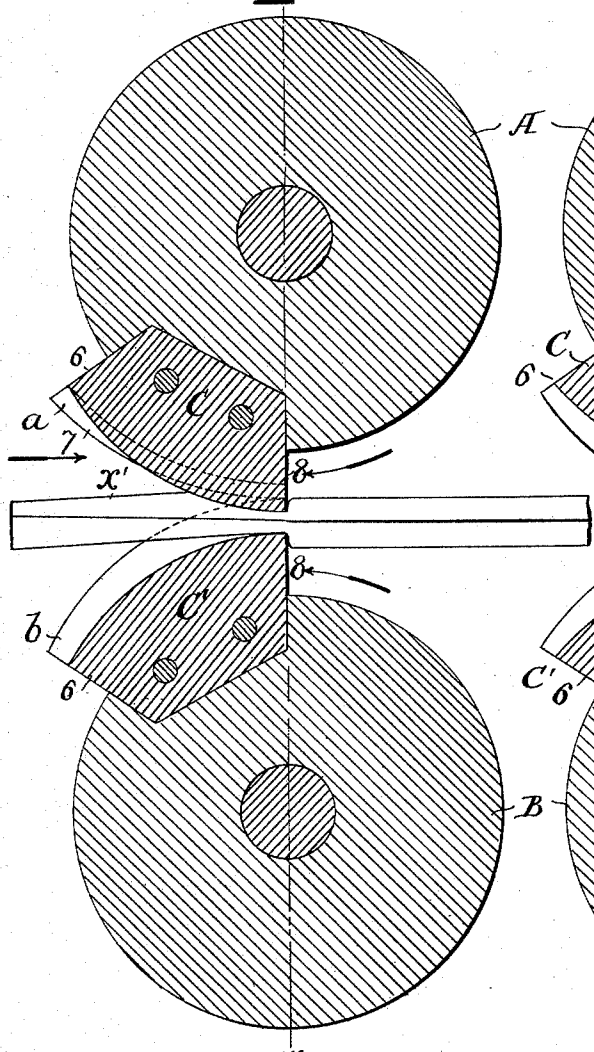

Fig. 3.

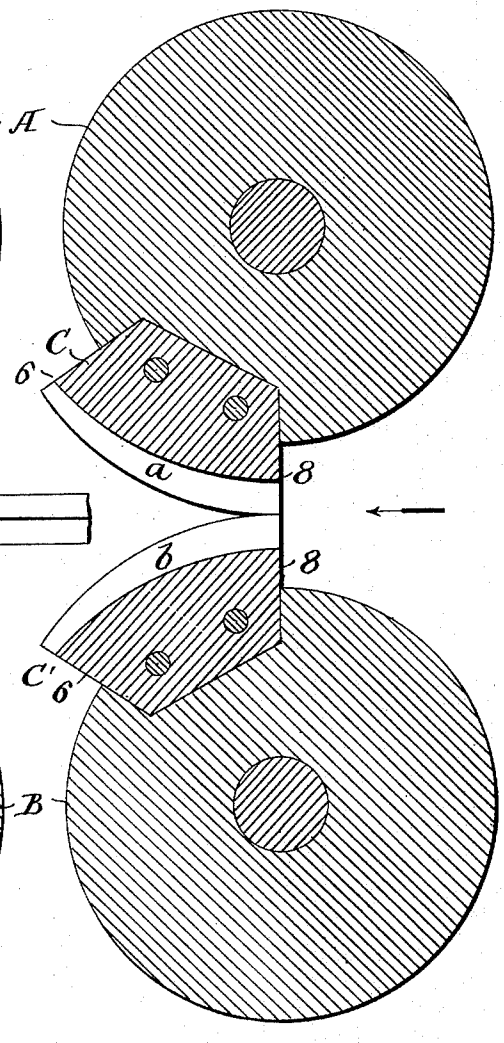

WITNESSES

Jno. G. Hinkel

H. S. McArthur

INVENTOR

Leroy D. Hill

By Foster Freeman

Attorneys

THE NORRIS PETERS CO., PHOTO-LITHO., WASHINGTON, D. C.

(No Model.) 2 Sheets—Sheet 2.

L. D. HILL.

MILL FOR ROLLING FAN TAIL AXLES.

No. 456,570. Patented July 28, 1891.

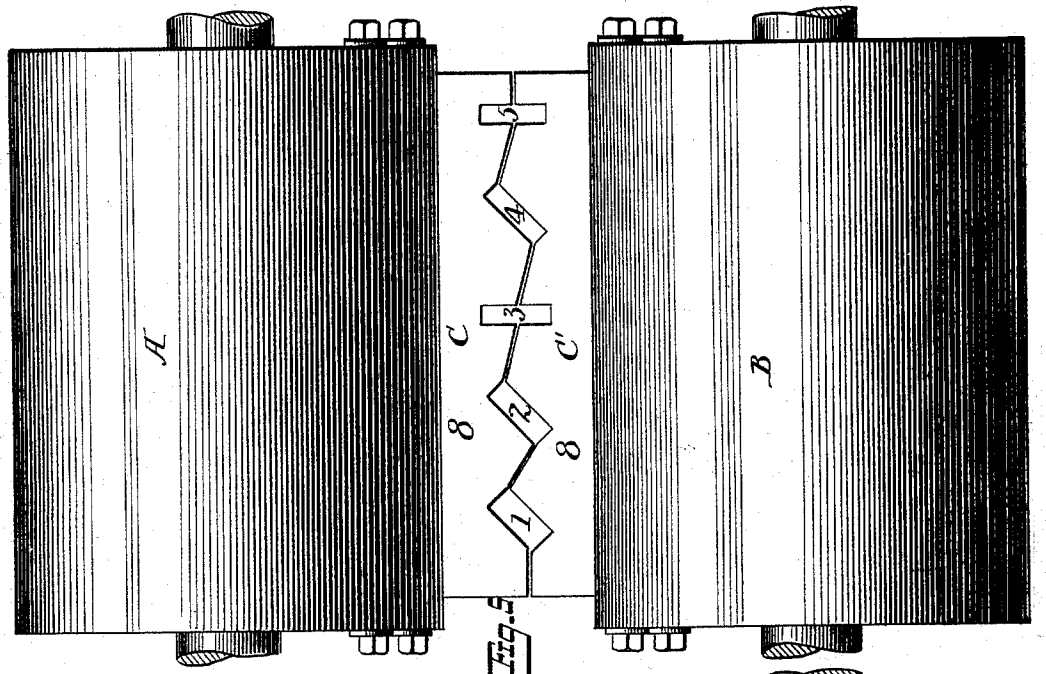

Fig. 3.

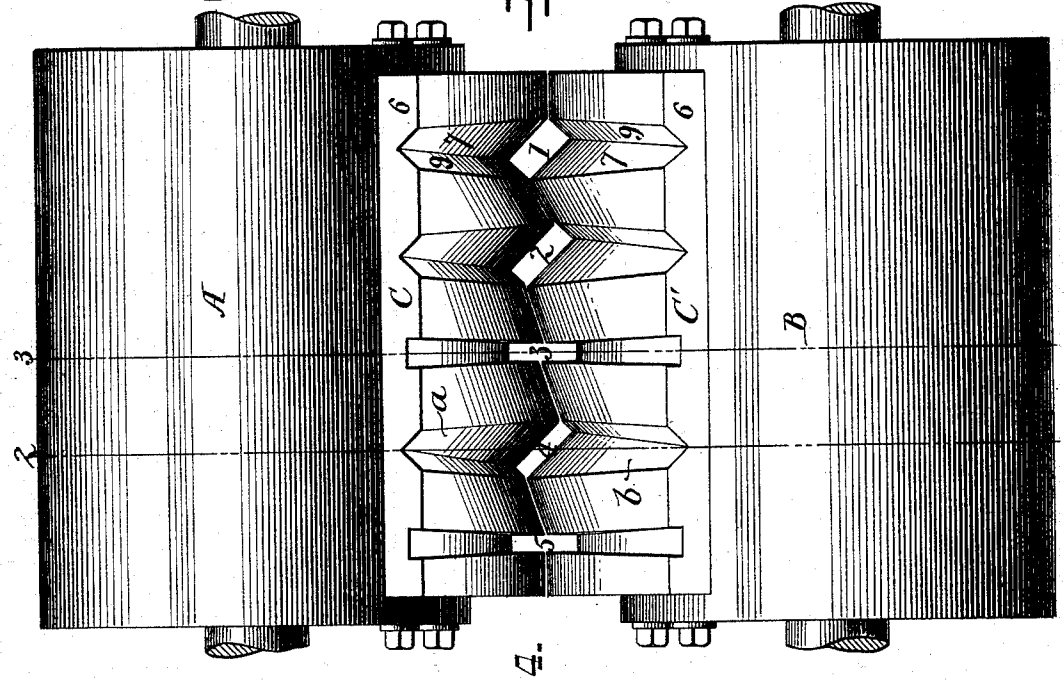

Fig. 4.

WITNESSES

Jno. J. Hinkel

H. S. McArthur

INVENTOR

Leroy D. Hill.

By Foster & Freeman

Attorneys.

THE NORRIS PETERS CO., PHOTO-LITHO., WASHINGTON, D. C.

UNITED STATES PATENT OFFICE.

LEROY D. HILL, OF WILKES-BARRÉ, PENNSYLVANIA, ASSIGNOR TO THE SHELDON AXLE COMPANY, OF SAME PLACE.

MILL FOR ROLLING FAN-TAIL AXLES.

SPECIFICATION forming part of Letters Patent No. 456,570, dated July 28, 1891.

Application filed May 18, 1891. Serial No. 393,099. (No model.)

To all whom it may concern:

Be it known that I, LEROY D. HILL, a citizen of the United States, residing at Wilkes-Barré, in the county of Luzerne and State of Pennsylvania, have invented certain new and useful Improvements in Mills for Rolling Fan-Tail Axles, of which the following is a specification.

What are known as "fan-tail" axles—that is, axles that gradually expand in width and generally decrease in thickness toward the center—have heretofore been made by hand of two pieces forged so as to spread the same toward one end, the widened ends being then welded together. This process requires the employment of skilled labor, and is objectionable from the liability of the metal to become burned and weakened and from imperfections in the welds, and to avoid these objections I manufacture the axle-blanks by the process and apparatus fully set forth hereinafter, and illustrated in the accompanying drawings, in which—

Figure 1 is a perspective view of a fan-tail-axle blank. Figs. 2 and 3 are sectional views of the rolls for producing the blank on the line 2 2 3 3, Fig. 4. Fig. 4 is an elevation, looking in the direction of the arrow, Fig. 2; Fig. 5, an elevation, looking in the direction of the arrow, Fig. 3.

The general form of the blank is illustrated in Fig. 1, the same being made from bar iron or steel, which may be square, circular, or polygonal in cross-section, and which, whatever its cross-sectional form, is distended toward the center to increase the width along the line x, and which also is generally contracted in thickness toward the center to reduce the thickness along the line y.

In order to effect the reduction of a bar of suitable cross-sectional form to the shape illustrated in Fig. 1 without welding and with greater rapidity than is possible by hand-forging, I make use of rolls A B, provided with passes of such shapes as will reduce the bar by a series of operations. While the reduction would be facilitated to some extent by providing the rolls with flat or horizontal passes, it would not be possible in this way to finish up the sides of the bar and produce sharp corners, which is necessary in order to manufacture merchantable blanks. I therefore provide the rolls with passes set at an angle, so that the vertical pressure and draw tend to force the metal into the corners of the grooves and impart a fine finish to the sides and edge faces. Further, in order to still better finish the faces, I may provide the rolls with edge passes. Thus the rolls are mounted to turn in the direction of the arrows in suitable housings and provided with grooves, or preferably carrying detachable dies C C′, in the curve-faces of which are grooves a b, which together constitute a series of passes 1 2 3 4 5 of any suitable number.

Referring first to the pass 1, each groove, as a or b, at the forward face 6 of the die conforms in shape to one-half of a section of a bar of merchant iron or steel that is to be rolled. As shown, each groove is triangular in cross-section, conforming to one-half of the bar when the latter is on edge, and one face 7 of each groove gradually widens toward the face 8 of the die, while the adjoining face 9 of the groove at right angles to the face 7 gradually contracts toward the face 8 of the die, so that said pass in its longitudinal dimensions becomes gradually wider in one direction and flatter in the other direction from the face 6 toward the face 8. As a result of this construction, if the end of a square merchant bar x' is inserted between the dies from the right-hand side, Fig. 1, when the faces 6 6 are on the same vertical plane one-half of the bar by the time the faces 8 8 are on the same vertical plane will be spread and narrowed toward the center, as illustrated in Fig. 2, and after the dies C C′ separate by the further revolution of the rolls in the direction of their arrows the bar may be drawn back and again introduced into the same pass 1, after reversing the bar to further finish the same; or it may be transferred to the next pass 2, which has the same general outline as the pass 1, but spreads a little farther in one direction and is more contracted in the other direction, so as to further spread and reduce the thickness of the bar for one-half its length, while the pass 4 still further spreads the bar and reduces the thickness toward the center. As the passes are all arranged angularly to the horizontal line, so that

the grooves in the dies are V-shaped, a better finish is secured than would be possible with box-grooves. The passes 3 5 are intended to operate upon the edges *t t*, and are therefore box-passes operating upon the bar on edge and imparting a better finish to the said faces *t t* and to the corners. After one-half of the bar has thus been operated upon to draw it down in shape from one end toward the center the opposite end of said bar is subjected to the same series of operations, thereby drawing it down from one end toward the center until a finished blank is obtained.

It will be seen that the operations upon the bar are effected by holding the same at one side of the mill, a result which can be obtained because of the projection of the dies C C′ above the faces of the rollers, which causes the dies to separate after they pass the plane *w*, permitting the bar to be drawn back and inserted in the proper pass, as upon the further revolution the faces 6 6 of the dies approach the plane *w*. By thus operating upon the bar to roll or draw it from each end toward the center I secure the desired shape without welding, and without the employment of the high class of labor required for hand forging, I accomplish the result more rapidly and with less detriment to the metal. The whole blank may be rolled at one heat by reversing the bar or blank.

Without limiting myself to the precise construction and arrangement of parts shown and described, I claim—

1. The within-described improvement in the art of making fan-tailed-axle blanks, the same consisting in drawing a bar of metal from each end toward the center by separate operations, to increase the width from each end to the center, substantially as set forth.

2. In the manufacture of fan-tail-axle blanks, subjecting the bar to a series of operations to draw down the same from one end toward the center to widen the same toward the center, and then subjecting the opposite end to a like series of operations, substantially as described.

3. A mill for drawing fan-tail-axle blanks, provided with axle-dies having grooves arranged to form passes each at an angle to the horizontal line and expanding from one end toward the other, substantially as set forth.

4. A rolling-mill provided with grooves arranged to form passes, each groove having two sides at right angles to each other, one side increasing in width and the other decreasing in width, substantially as set forth.

5. A mill for rolling fan-tail-axle blanks, provided with dies with grooves arranged to form a series of passes each widening in one direction and narrowing in the other, each pass increasing in width and decreasing in height in comparison with the preceding pass, substantially as set forth.

6. The combination, in a rolling-mill, of a series of passes constructed to impart a fan-tail form to a bar, and additional box-passes arranged to operate upon the edges of the bar, substantially as set forth.

In testimony whereof I have signed my name to this specification in the presence of two subscribing witnesses.

LEROY D. HILL.

Witnesses:
N. P. H. HUGUS,
C. H. GILLAM.