March 15, 1932. R. SELQUIST 1,849,410

FENCING

Filed Feb. 11, 1930

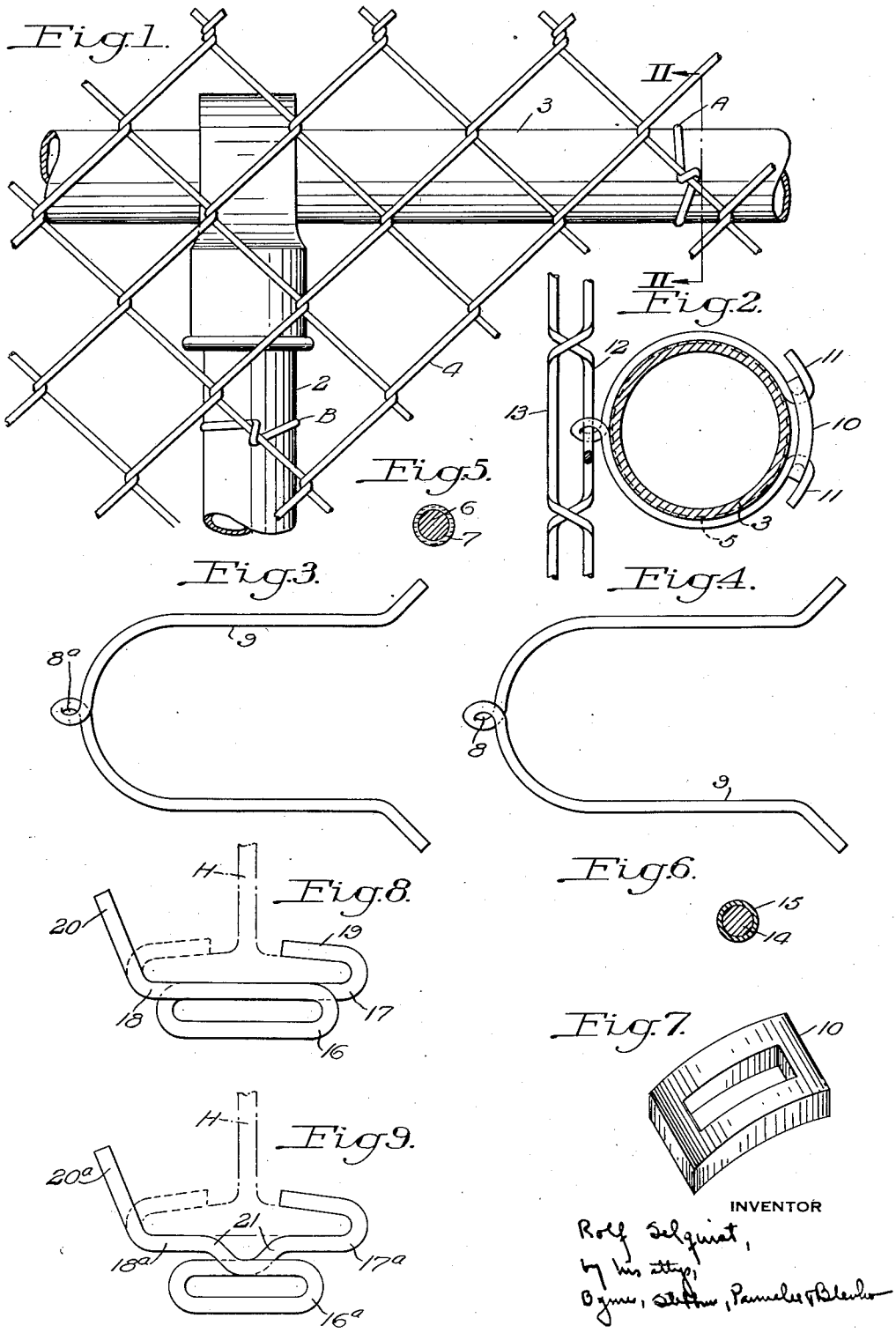

INVENTOR

Rolf Selquist,
by his attys,
Byrne, Stetson, Parmelee & Blenko

Patented Mar. 15, 1932

1,849,410

UNITED STATES PATENT OFFICE

ROLF SELQUIST, OF McKEESPORT, PENNSYLVANIA, ASSIGNOR TO COPPERWELD STEEL COMPANY, OF GLASSPORT, PENNSYLVANIA, A CORPORATION OF PENNSYLVANIA

FENCING

Application filed February 11, 1930. Serial No. 427,497.

This invention relates to fencing and provides means whereby electrolysis between the metal of the fencing proper and the supports therefor is eliminated.

It is common practice to make fencing of steel wire and galvanize the same to prevent rust, and to support this fencing on galvanized pipe supports. It is difficult, however, to get an entirely satisfactory galvanizing of the wire fencing, and a much more satisfactory product, both from the standpoint of appearance and life, can be made from steel wire having a protective coating of copper. Such wire is made by pouring molten copper around a heated steel billet, and then by a process of rolling and wire drawing, reducing this bi-metallic billet to wire. From the standpoint of cost, it is still desirable to make the fence supports of galvanized pipe. It has been found that where copper-protected fencing is mounted on galvanized supports with the fencing in direct contact with the supports, electrolysis takes place. In the electromotive force series of metals, zinc is 0.770 above hydrogen (zero in the table), whereas copper is 0.336 below hydrogen. Electrolysis therefore takes place very readily, the result being that the zinc is removed from the support at points of contact with the fencing, whereupon the supports begin to rust and leave rust streaks on the supporting poles and stringers.

I provide a connecting means which is effective for separating the fencing from the support. Preferably this connecting means is in the form of a wire tie having a portion or portions extending between and separating the fencing from the supports. The tie may be made of any suitable material which will inhibit electrolytic action. For example, I may use a copper-covered steel wire having a heavy lead-tin coating. The value of tin in the electromotive force of metals is 0.192 above hydrogen, and that of lead is 0.148 above hydrogen. The coating of the tie, therefore, lies between the metals of the fencing and the support in the electromotive force series of metals.

In the accompanying drawings illustrating the present preferred embodiment of the invention,

Figure 1 is an elevation of a portion of a fence showing my invention;

Figure 2 is a section taken on the line II—II of Figure 1;

Figure 3 is a view of a tie employed with the fence poles;

Figure 4 is a similar view showing a tie employed with the stringers;

Figure 5 is a section through the fencing wire;

Figure 6 is a similar section through the wire comprising the tie;

Figure 7 is a perspective view of a button employed in connection with the tie;

Figure 8 is a top plan view of one form of tie employed with a fence post of H-beam or similar section; and

Figure 9 is a similar view showing a slightly modified tie.

The fence shown in Figures 1 and 2 comprises a support made up of poles 2 and stringers 3 carrying a diamond mesh wire fencing 4. The pipe and connections forming the fence support are galvanized, as indicated at 5 in Figure 2, while the fencing 4 is made of copper-covered steel wire (see Figure 5) having a steel core 6 and a protective coating 7 of copper.

As above stated, electrolysis takes place when fencing of this character is supported in direct contact with the galvanized poles, stringers and connections. I therefore employ special ties of the form shown in Figures 3 and 4. The tie of Figure 4 comprises a wire bent to form an eye or loop 8 adapted to receive the fencing, and having portions 9 which extend around the stringers 3. The tie is held in place by placing a button 10 over the ends of the extensions 9 and bending

such extensions backwardly, as indicated at 11 in Figure 2. If desired, the button 10 may be dispensed with and the ties simply twisted around the fence posts or stringers.

The wire or loop 8 is formed by bending wire in the form of a left-hand spiral. This is for the reason that in diamond mesh fencing of the type shown in Figure 1, the bights 12 which lie closest to the supports extend upwardly and to the left, whereas the bights 13, which lie outwardly of the fencing, extend upwardly and to the right. It is desirable to attach the ties to the inner bights 12 and where the eye is bent in the form of a left-hand spiral the tie assumes the position shown at A in Figure 1. The tie of Figure 3 differs from that of Figure 4 only in that the loop 8*a* is in the form of a right-handed spiral so that the same assumes a horizontal position, as indicated at B in Figure 1, and is thus properly positioned for attachment to a post 2.

The ties are shown in cross section in Figure 6. Each tie comprises a steel core 14 having a heavy lead-tin coating 15. The button 10 may be similarly coated to protect it from the elements, or may be galvanized.

It is frequently necessary to use a post of H-beam section, and in applying my invention to fences having such posts I employ clips such as illustrated in Figures 8 and 9. The clip of Figure 8 consists of a loop 16 of wire similar to that shown in Figure 6, having arms 17 and 18. These arms lie in the same plane but are spaced a sufficient distance apart to permit of the clip being slipped over the wire of the fencing. The arm 17 has a finger 19 bent to fit around one flange of an H-beam, indicated in dot and dash lines at H. The arm 18 has a finger 20 which is bent to the form shown in solid lines in Figure 8 when the clip is supplied to the user, the finger being bent around the flange of the H-beam post, as indicated in dotted lines, to hold the clip in place. It will be noted that the loop 16 is elongated. This becomes necessary because it is desired that the clips be spaced a uniform distance apart, and if the section of the wire fabric does not come in the central plane of the post, the elongated loop accommodates it; which would not be the case if the loop were of small size as in Figures 3 and 4. With a circular post the clip can be turned around the post through a reasonably wide range so as to engage the fencing wire. The clip of Figure 9 is similar to that of Figure 8 except that the loop 16*a* is connected to the arms 17*a* and 18*a* through offsets 21.

By my invention the copper of the fencing is spaced from the zinc of the supports, thus eliminating electrolysis and the consequent exposure of the base metal in the supports.

I have illustrated and described a present preferred embodiment of the invention. It will be understood, however, that it is not limited to the form shown but may be otherwise embodied within the scope of the following claims.

I claim:

1. In combination with metal fencing and a metal support therefor, the two metals being relatively widely separated in the electromotive force series of metals, connecting means capable of inhibiting electrolytic action effective for separating the fencing from the support.

2. In combination with metal fencing and a metal support therefor, the two metals being relatively widely separated in the electromotive force series of metals, a tie for connecting the fencing to the support but having a portion extending between and separating the fencing and the support.

3. In combination with metal fencing and a metal support therefor, the two metals being of a character likely to bring about electrolysis if in contact with one another under weathering conditions, connecting means effective for separating the fencing from the support.

4. In combination with metal fencing and a metal support therefor, the two metals being of a character likely to bring about electrolysis if in contact with one another under weathering conditions, connecting means effective for separating the fencing from the support, the connecting means having a portion lying between the fencing and the support and being of a metal which will inhibit electrolytic action.

5. In combination with metal fencing and a metal support therefor, the two metals being relatively widely separated in the electromotive force series of metals, connecting means effective for separating the fencing from the support, the connecting means having its surface portions at least formed of a metal intermediate the first-mentioned metals in the electromotive force series of metals.

6. In combination with metal fencing whose surface portions at least are of copper, and a support therefor whose surface portions at least are of zinc, a connecting means effective for separating the fencing from the support.

7. In combination with metal fencing whose surface portions at least are of copper and a galvanized support therefor, connecting means effective for separating the fencing from the support.

8. In combination with metal fencing and a metal support therefor, the surface portions at least of one of said elements being copper and the surface portions at least of the other of said elements being zinc, a separating means for spacing the fencing from the support.

9. In combination with metal fencing and a metal support therefor, the two metals be-

ing relatively widely separated in the electromotive force series of metals, means effective for separating the fencing from the support.

10. In combination with metal fencing and a metal support therefor, said elements comprising a least in part metals of a character likely to bring about electrolysis if placed in contact with one another under weathering conditions, a tie effective for separating the fencing and the support, the tie having a lead coating.

11. In combination with metal fencing and a metal support therefor, said elements comprising at least in part metals of a character likely to bring about electrolysis if placed in contact with one another under weathering conditions, a tie effective for separating the fencing and the support, the tie having a lead-tin coating.

12. In combination with metal fencing and a metal support therefor, the surface portions at least of one of said elements being of copper, and the other of said elements being galvanized, separating means having surface portions at least comprising lead.

13. In combination with metal fencing and a metal support therefor, said elements comprising at least in part metals of a character likely to bring about electrolysis if placed in contact with one another, a wire tie bent to form an eye which receives an element of the fencing, the wire having portions extending from the eye around the metal support and effective for holding the fencing in place, the tie separating the fencing and the support and having its surface portions at least formed of a metal intermediate the first-mentioned metals in the electromotive force series of metals.

14. As a new product, a metal fence comprising supporting means having a surface formed of metal lying above hydrogen in the electromotive series of metals, reticulated wire means having a surface formed of metal lying below hydrogen in the electromotive series of metals, and wire means tying the reticulated wire means with the supporting means, said wire tying means having a surface formed of metal lying between said other named metals in the electromotive series of metals.

15. In an all-metal fence structure, a metallic tying element having the double function of connecting mechanically and separating electrolytically the essential components of the structure.

16. In combination with metal fencing and a metal support therefor, said elements comprising at least in part metals of a character likely to bring about electrolysis if placed in contact with one another under weathering conditions, a wire tie bent to form an eye which receives an element of the fencing, the wire having portions extending from the eye around the metal support and effective for holding the fencing in place, the tie separating the fencing and the support and having its surface portions at least formed of a metal intermediate the first-mentioned metals in the electromotive force series of metals, and button means for joining the extending portions of the wire tie.

In testimony whereof I have hereunto set my hand.

ROLF SELQUIST.