(12) INTERNATIONAL APPLICATION PUBLISHED UNDER THE PATENT COOPERATION TREATY (PCT)

(19) World Intellectual Property Organization
International Bureau

(43) International Publication Date
24 May 2012 (24.05.2012)

WIPO | PCT

(10) International Publication Number
WO 2012/068507 A2

(51) International Patent Classification:
G01J 5/02 (2006.01)

(21) International Application Number:
PCT/US2011/061479

(22) International Filing Date:
18 November 2011 (18.11.2011)

(25) Filing Language: English

(26) Publication Language: English

(30) Priority Data:

61/415,771	19 November 2010 (19.11.2010)	US
61/429,093	31 December 2010 (31.12.2010)	US
13/199,108	17 August 2011 (17.08.2011)	US
61/627,996	21 October 2011 (21.10.2011)	US

(71) Applicant *(for all designated States except US)*: **NEST LABS, INC.** [US/US]; Nest Labs, Inc., 900 Hansen Way, Palo Alto, California 94306 (US).

(72) Inventors; and

(75) Inventors/Applicants *(for US only)*: **HUPPI, Brian** [US/US]; 900 Hansen Way, Palo Alto, California 94306 (US). **FILSON, John B.** [US/US]; 900 Hansen Way, Palo Alto, California 94306 (US). **BOULD, Fred** [US/US]; 900 Hansen Way, Palo Alto, California 94306 (US). **SLOO, David** [US/US]; 900 Hansen Way, Palo Alto, California 94306 (US). **ROGERS, Matthew L.** [US/US]; 900 Hansen Way, Palo Alto, California 94306 (US). **FADELL, Anthony M.** [US/US]; 900 Hansen Way, Palo Alto, California 94306 (US).

(74) Agent: **WIESNER, Leland Zack**; Wiesner And Associates, 366 Cambridge Ave., Palo Alto, California 94306 (US).

(81) Designated States *(unless otherwise indicated, for every kind of national protection available)*: AE, AG, AL, AM, AO, AT, AU, AZ, BA, BB, BG, BH, BR, BW, BY, BZ, CA, CH, CL, CN, CO, CR, CU, CZ, DE, DK, DM, DO, DZ, EC, EE, EG, ES, FI, GB, GD, GE, GH, GM, GT, HN, HR, HU, ID, IL, IN, IS, JP, KE, KG, KM, KN, KP, KR, KZ, LA, LC, LK, LR, LS, LT, LU, LY, MA, MD, ME, MG, MK, MN, MW, MX, MY, MZ, NA, NG, NI, NO, NZ, OM, PE, PG, PH, PL, PT, QA, RO, RS, RU, RW, SC, SD, SE, SG, SK, SL, SM, ST, SV, SY, TH, TJ, TM, TN, TR, TT, TZ, UA, UG, US, UZ, VC, VN, ZA, ZM, ZW.

(84) Designated States *(unless otherwise indicated, for every kind of regional protection available)*: ARIPO (BW, GH, GM, KE, LR, LS, MW, MZ, NA, RW, SD, SL, SZ, TZ, UG, ZM, ZW), Eurasian (AM, AZ, BY, KG, KZ, MD, RU, TJ, TM), European (AL, AT, BE, BG, CH, CY, CZ, DE, DK, EE, ES, FI, FR, GB, GR, HR, HU, IE, IS, IT, LT, LU, LV, MC, MK, MT, NL, NO, PL, PT, RO, RS, SE, SI, SK, SM, TR), OAPI (BF, BJ, CF, CG, CI, CM, GA, GN, GQ, GW, ML, MR, NE, SN, TD, TG).

Published:

— *without international search report and to be republished upon receipt of that report (Rule 48.2(g))*

(54) **Title**: THERMOSTAT WITH INTEGRATED SENSING SYSTEMS

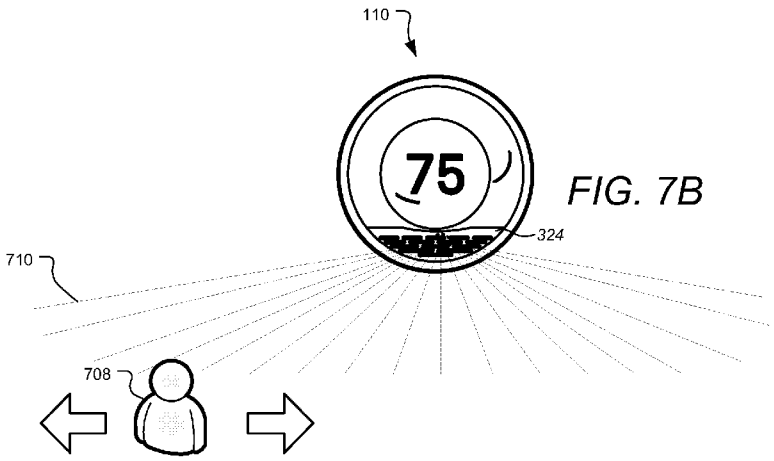

FIG. 7B

(57) **Abstract**: Provided according to one embodiment is a thermostat having a housing including a forward-facing surface comprising a passive infrared (PIR) motion sensor disposed inside the housing for sensing occupancy in the vicinity of the thermostat. The PIR motion sensor has a radiation receiving surface that detects the lateral movement of an occupant in front of the forward-facing surface. A grille member having one or more openings is also included along the forward-facing surface and placed over the radiation receiving surface of the PIR motion sensor. The grille member is dimensioned to visually conceal and protect the PIR motion sensor disposed inside the housing promoting a visually pleasing quality of the thermostat, while also permitting the PIR motion sensor to effectively detect the lateral movement of the occupant. In one embodiment, the grille member openings are slit-like openings oriented along a substantially horizontal direction.

WO 2012/068507 A2

THERMOSTAT WITH INTEGRATED SENSING SYSTEMS

[0001] This application is being filed on 18 November 2011 as a PCT International Patent application in the name of Nest Labs, Inc., a US national corporation, applicant for the designation of all countries except the US, and Brian Huppi, John B. Filson, Fred Bould, David Sloo, Matthew L. Rogers, and Anthony M. Fadell, each a citizen of the US, applicants for the designation of the US only. This application claims the benefit of U.S. Provisional Application Ser. No. 61/415,771 filed 19 November 2010, U.S. Provisional Application Ser. No. 61/429,093 filed 31 December 2010, U.S. Ser. No. 13/199,108 filed 17 August 2011, and U.S. Provisional Application Ser. No. 61/627,996 filed 21 October 2011, each of which is incorporated by reference herein.

FIELD

[0002] This patent specification relates to system monitoring and control, such as the monitoring and control of heating, ventilation, and air conditioning (HVAC) systems. More particularly, this patent specification relates to a monitoring and control device, such as a thermostat, having integrated sensing systems.

BACKGROUND

[0003] Substantial effort and attention continues toward the development of newer and more sustainable energy supplies. The conservation of energy by increased energy efficiency remains crucial to the world's energy future. According to an October 2010 report from the U.S. Department of Energy, heating and cooling account for 56% of the energy use in a typical U.S. home, making it the largest energy expense for most homes. Along with improvements in the physical

plant associated with home heating and cooling (e.g., improved insulation, higher efficiency furnaces), substantial increases in energy efficiency can be achieved by better control and regulation of home heating and cooling equipment. By activating heating, ventilation, and air conditioning (HVAC) equipment for judiciously selected time intervals and carefully chosen operating levels, substantial energy can be saved while at the same time keeping the living space suitably comfortable for its occupants.

[0004] It would be beneficial, at both a societal level and on a per-home basis, for a large number of homes to have their existing older thermostats replaced by newer, microprocessor controlled "intelligent" thermostats having more advanced HVAC control capabilities that can save energy while also keeping the occupants comfortable. To do this, these thermostats will need more information from the occupants as well as the environments where the thermostats are located. Sensors in the home will gather real-time and historic data, such as occupancy data, to be used by thermostat to automate the HVAC controls. By analyzing this data, thermostats will make decisions on heating, cooling and saving energy. For at least this reason, it is important to make sure sensors used by thermostats produce accurate data. At the same time, however, there is a tension that can arise between increasing the number and kinds of sensors on the thermostat, on the one hand, while also provisioning the thermostat with a reasonably compact and visually pleasing form factor, on the other hand, for increasing the overall appeal of the intelligent thermostat to the purchasing public.

SUMMARY

[0005] Provided according to one or more embodiments is a thermostat having a housing, the housing including a forward-facing surface, the thermostat comprising a passive infrared (PIR) motion sensor disposed inside the housing for sensing occupancy in the vicinity of the thermostat. The PIR motion sensor has a radiation receiving surface and is able to detect the lateral movement of an occupant in front of the forward-facing surface of the housing. The thermostat

further comprises a grille member having one or more openings and included along the forward-facing surface of the housing, the grille member being placed over the radiation receiving surface of the PIR motion sensor. The grille member is configured and dimensioned to visually conceal and protect the PIR motion sensor disposed inside the housing, the visual concealment promoting a visually pleasing quality of the thermostat, while at the same time permitting the PIR motion sensor to effectively detect the lateral movement of the occupant. In one embodiment, the grille member openings are slit-like openings oriented along a substantially horizontal direction.

[0006] In one embodiment a temperature sensor is also positioned behind the grille member, the temperature sensor also being visually concealed behind the grille member. In one embodiment the grille member is formed from a thermally conductive material such as a metal, and the temperature sensor is placed in thermal communication with the metallic grille, such as by using a thermal paste or the like. Advantageously, in addition to exposing the temperature sensor to ambient room air by virtue of the grille openings, the metallic grille member can further improve temperature sensing performance by acting as a sort of “thermal antenna” for the temperature sensor.

BRIEF DESCRIPTION OF THE DRAWINGS

[0007] FIG. 1 is a diagram illustrating an exemplary enclosure using a thermostat implemented in accordance with aspects of the present invention for controlling one or more environmental conditions;

[0008] FIG. 2 is a schematic diagram of an HVAC system controlled using a thermostat designed in accordance with implementations of the present invention;

[0009] FIGS. 3A-3B illustrate a grille member affixed to a forward-facing surface of a thermostat designed in accordance with implementations of the present invention;

[0010] FIGS. 4A-B illustrate a user's hand controlling a thermostat designed in accordance with implementations of the present invention;

[0011] FIGS. 5A-5G illustrate a thermostat in various states of disassembly and the position of a grille member designed in accordance with the present invention in relationship to sensors and other components associated with the thermostat;

[0012] FIG. 6 illustrates a perspective view of partially assembled head unit front from the thermostat showing the positioning of sensors in relation to the grille member designed in accordance with aspects of the present invention;

[0013] FIG. 7A-7B illustrates infrared sources interacting with the slit-like openings in a grille member designed in accordance with the present invention;

[0014] FIGS. 8A-8D illustrate altering the openings of a grille member along a vertical distance to change the sensitivity of a PIR motion sensor in accordance with aspects of the present invention;

[0015] FIG. 9 is flow chart diagram that outlines the operations associated with integrating sensor capabilities with a thermostat and grille member in accordance with aspects of the present invention;

[0016] FIGS. 10-17 are omitted from the instant patent specification;

[0017] FIGS. 18A-B illustrate front and perspective views, respectively, of a visually appealing thermostat having a user-friendly interface in accordance with aspects of the present invention;

[0018] FIG. 18C illustrates a cross-sectional view of the thermostat of FIGS. 18A-18B;

[0019] FIGS. 19A-19B illustrate exploded front and rear perspective views, respectively, of a head unit and a backplate of the thermostat of FIGS. 18A-18C;

[0020] FIGS. 20A-20B illustrate exploded front and rear perspective views, respectively, of the head unit of FIGS. 19A-19B;

[0021] FIGS. 21A-21B illustrate exploded front and rear perspective views, respectively, of a frontal assembly of the head unit of FIGS. 20A-20B;

[0022] FIGS. 22A-22B illustrate exploded front and rear perspective views, respectively, of the backplate of FIGS. 19A-19B;

[0023] FIG. 23 illustrates an exploded perspective upward view of the head unit of FIGS. 19A-19B;

[0024] FIG. 24 illustrates a head-on view of a head unit circuit board of the head unit of FIGS. 19A-19B;

[0025] FIG. 25 illustrates a rear view of a backplate circuit board of the backplate of FIGS. 19A-19B;

[0026] FIGS. 26A-26C illustrate conceptual examples of a sleep-wake timing dynamic between a relatively high-powered head unit microprocessor of a thermostat and a relatively low-powered backplate microcontroller of the thermostat in accordance with aspects of the present invention;

[0027] FIG. 27 illustrates an overview diagram of the functional software, firmware, and/or programming architecture of a thermostat head unit microprocessor in accordance with aspects of the present invention;

[0028] FIG. 28 illustrates an overview diagram of the functional software, firmware, and/or programming architecture of a thermostat backplate microcontroller in accordance with aspects of the present invention; and

[0029] FIG. 29 illustrates a front view of wiring terminals of a thermostat backplate in accordance with aspects of the present invention.

DETAILED DESCRIPTION

[0030] In the following detailed description, for purposes of explanation, numerous specific details are set forth to provide a thorough understanding of the various implementations of the present invention. Those of ordinary skill in the art will realize that these various implementations of the present invention are illustrative only and are not intended to be limiting in any way. Other implementations of the present invention will readily suggest themselves to such skilled persons having the benefit of this disclosure.

[0031] In addition, for clarity purposes, not all of the routine features of the implementations described herein are shown or described. One of ordinary skill in the art would readily appreciate that in the development of any such actual implementation, numerous implementation-specific decisions may be required to achieve specific design objectives. These design objectives will vary from one

implementation to another and from one developer to another. Moreover, it will be appreciated that such a development effort might be complex and time-consuming but would nevertheless be a routine engineering undertaking for those of ordinary skill in the art having the benefit of this disclosure.

[0032] It is to be appreciated that while one or more implementations are described further herein in the context of typical HVAC system used in a residential home, such as single-family residential home, the scope of the present teachings is not so limited. More generally, thermostats according to one or more of the preferred implementations are applicable for a wide variety of enclosures having one or more HVAC systems including, without limitation, duplexes, townhomes, multi-unit apartment buildings, hotels, retail stores, office buildings and industrial buildings. Further, it is to be appreciated that while the terms user, customer, installer, homeowner, occupant, guest, tenant, landlord, repair person, and the like may be used to refer to the person or persons who are interacting with the thermostat or other device or user interface in the context of one or more scenarios described herein, these references are by no means to be considered as limiting the scope of the present teachings with respect to the person or persons who are performing such actions.

[0033] The subject matter of this patent specification relates to the subject matter of the following commonly assigned applications, each of which is incorporated by reference herein: U.S. Ser. No. 12/881,430 filed September 14, 2010; U.S. Ser. No. 12/881,463 filed September 14, 2010; U.S. Prov. Ser. No. 61/415,771 filed November 19, 2010; U.S. Prov. Ser. No. 61/429,093 filed December 31, 2010; U.S. Ser. No. 12/984,602 filed January 4, 2011; U.S. Ser. No. 12/987,257 filed January 10, 2011; U.S. Ser. No. 13/033,573 filed February 23, 2011; U.S. Ser. No. 29/386,021, filed February 23, 2011; U.S. Ser. No. 13/034,666 filed February 24, 2011; U.S. Ser. No. 13/034,674 filed February 24, 2011; U.S. Ser. No. 13/034,678 filed February 24, 2011; U.S. Ser. No. 13/038,191 filed March 1, 2011; U.S. Ser. No. 13/038,206 filed March 1, 2011; U.S. Ser. No. 29/399,609 filed August 16, 2011; U.S. Ser. No. 29/399,614 filed August 16, 2011; U.S. Ser.

No. 29/399,617 filed August 16, 2011; U.S. Ser. No. 29/399,618 filed August 16, 2011; U.S. Ser. No. 29/399,621 filed August 16, 2011; U.S. Ser. No. 29/399,623 filed August 16, 2011; U.S. Ser. No. 29/399,625 filed August 16, 2011; U.S. Ser. No. 29/399,627 filed August 16, 2011; U.S. Ser. No. 29/399,630 filed August 16, 2011; U.S. Ser. No. 29/399,632 filed August 16, 2011; U.S. Ser. No. 29/399,633 filed August 16, 2011; U.S. Ser. No. 29/399,636 filed August 16, 2011; U.S. Ser. No. 29/399,637 filed August 16, 2011; U.S. Ser. No. 13/199,108, filed August 17, 2011; U.S. Ser. No. 13/267,871 filed October 6, 2011; U.S. Ser. No. 13/267,877 filed October 6, 2011; U.S. Ser. No. 13/269,501, filed October 7, 2011; U.S. Ser. No. 29/404,096 filed October 14, 2011; U.S. Ser. No. 29/404,097 filed October 14, 2011; U.S. Ser. No. 29/404,098 filed October 14, 2011; U.S. Ser. No. 29/404,099 filed October 14, 2011; U.S. Ser. No. 29/404,101 filed October 14, 2011; U.S. Ser. No. 29/404,103 filed October 14, 2011; U.S. Ser. No. 29/404,104 filed October 14, 2011; U.S. Ser. No. 29/404,105 filed October 14, 2011; U.S. Ser. No. 13/275,307 filed October 17, 2011; U.S. Ser. No. 13/275,311 filed October 17, 2011; U.S. Ser. No. 13/317,423 filed October 17, 2011; U.S. Ser. No. 13/279,151 filed October 21, 2011; U.S. Ser. No. 13/317,557 filed October 21, 2011; and U.S. Prov. Ser. No. 61/627,996 filed October 21, 2011.

[0034] FIG. 1 is a diagram illustrating an exemplary enclosure using a thermostat 110 implemented in accordance with the present invention for controlling one or more environmental conditions. For example, enclosure 100 illustrates a single-family dwelling type of enclosure using thermostat 110 for the control of heating and cooling provided by an HVAC system 120. Alternate implementations of the present invention may be used with other types of enclosures including a duplex, an apartment within an apartment building, a light commercial structure such as an office or retail store, or a structure or enclosure that is a combination of these and other types of enclosures.

[0035] Some implementations of thermostat 110 in FIG. 1 incorporate one or more sensors to gather data from the environment associated with enclosure 100. Sensors incorporated in thermostat 110 may detect occupancy, temperature, light

and other environmental conditions and influence the control and operation of HVAC system 120. Thermostat 110 uses a grille member (not shown in FIG. 1) implemented in accordance with the present invention to cover the sensors. In part, the grille member of the present invention adds to the appeal and attraction of the thermostat 110 as the sensors in thermostat 110 do not protrude, or attract attention from occupants of enclosure 100 and the thermostat 110 fits with almost any decor. Keeping sensors within thermostat 110 also reduces the likelihood of damage and loss of calibration during manufacture, delivery, installation or use of thermostat 110. Yet despite covering these sensors, the specialized design of the grille member facilitates accurately gathering occupancy, temperature and other data from the environment. Further details on this design and other aspects of the grille member are also described in detail later herein.

[0036] In some implementations, thermostat 110 may wirelessly communicate with remote device 112 gathering information remotely from the user and from the environment detectable by the remote device 112. For example, the remote device 112 can wirelessly communicate with the thermostat 110 providing user input from the remote location of remote device 112 or may be used to display information to a user, or both. Like thermostat 110, implementations of remote device 112 may also include sensors to gather data related to occupancy, temperature, light and other environmental conditions. A grille member (not shown in FIG. 1) designed in accordance with the present invention may also be used to conceal these sensors maintaining an attractive and pleasing appearance of the remote device 112 within the enclosure 100. In an alternate implementation, remote device 112 may also be located outside of the enclosure 100.

[0037] FIG. 2 is a schematic diagram of an HVAC system controlled using a thermostat designed in accordance with implementations of the present invention. HVAC system 120 provides heating, cooling, ventilation, and/or air handling for an enclosure, such as a single-family home 100 depicted in FIG. 1. System 120 depicts a forced air type heating and cooling system, although according to other

implementations, other types of HVAC systems could be used such as radiant heat based systems, heat-pump based systems, and others.

[0038] In heating, heating coils or elements 242 within air handler 240 provide a source of heat using electricity or gas via line 236. Cool air is drawn from the enclosure via return air duct 246 through filter 270, using fan 238 and is heated through heating coils or elements 242. The heated air flows back into the enclosure at one or more locations via supply air duct system 252 and supply air registers such as register 250. In cooling, an outside compressor 230 passes a gas such as Freon through a set of heat exchanger coils 244 to cool the gas. The gas then goes through line 232 to the cooling coils 234 in the air handler 240 where it expands, cools and cools the air being circulated via fan 238. A humidifier 254 may optionally be included in various implementations that returns moisture to the air before it passes through duct system 252. Although not shown in FIG. 2, alternate implementations of HVAC system 120 may have other functionality such as venting air to and from the outside, one or more dampers to control airflow within the duct system 252 and an emergency heating unit. Overall operation of HVAC system 120 is selectively actuated by control electronics 212 communicating with thermostat 110 over control wires 248.

[0039] FIGS. 3A-3B illustrate a grille member incorporated in a thermostat designed in accordance with implementations of the present invention. Thermostat 110 includes control circuitry and is electrically connected to an HVAC system, such as HVAC system 120 shown in FIG. 1 and FIG. 2. The design of a grille member 324 compliments the sleek, simple, uncluttered and elegant design of thermostat 110 while facilitating the integration and operation of sensors located within a housing 346 of the thermostat. In the implementation as illustrated, thermostat 110 is enclosed by housing 346 with a forward-facing surface including a cover 314 and the grille member 324. Some implementations of housing 346 include a backplate 340 and a head unit 310. Housing 346 provides an attractive and durable configuration for one or more integrated sensors used by thermostat 110 and contained therein. In some implementations, grille member 324 may be

flush-mounted with the cover 314 on the forward-facing surface of housing 346. Together grille member 324 as incorporated in housing 346 does not detract from home or commercial decor, and indeed can serve as a visually pleasing centerpiece for the immediate location in which it is located.

[0040] A central display area 316 of cover 314 allows information related to the operation of the thermostat to be displayed while an outer area 326 of cover 314 may be made opaque using a paint or smoke finish. For example, central display area 316 may be used to display a current temperature as illustrated in FIG. 3A with the numerals, “75” indicating 75 degrees.

[0041] Grille member 324 is designed to conceal sensors from view promoting a visually pleasing quality of the thermostat yet permitting them to receive their respective signals. Openings 318 in grille member 324 along the forward-facing surface of the housing allow signals to pass through that would otherwise not pass through cover 314. For example, glass, polycarbonate or other similar materials used for cover 314 are capable of transmitting visible light but are highly attenuating to infrared energy having longer wavelengths in the range of 10 microns, which is the radiation band of operation for many passive infrared (PIR) occupancy sensors. Notably, included in the thermostat according to some preferred implementations is an ambient light sensor (not shown) and an active proximity sensor (not shown) positioned near the top of the thermostat just behind the cover 314. Unlike PIR sensors, the ambient light sensor and active proximity sensor are configured to detect electromagnetic energy in the visible and shorter-infrared spectrum bands having wavelengths less than 1 micron, for which the glass or polycarbonate materials of the cover 314 are not highly attenuating. In some implementations, grille member 324 includes openings 318 in accordance with one or more implementations that allow the longer-wavelength infrared radiation to pass through the openings towards a passive infrared (PIR) motion sensor 330 as illustrated. Because grille member 324 is mounted over the radiation receiving surface of PIR motion sensor 330, PIR motion sensor 330 continues to

receive the longer wavelength infrared radiation through the openings 318 and detect occupancy in an enclosure.

[0042] Additional implementations of grille member 324 also facilitate additional sensors to detect other environmental conditions. In some implementations, grille member 324 helps a temperature sensor 334 situated inside of housing 346 measure the ambient temperature of air. Openings 318 in grille member 324 promote air flow towards temperature sensor 334 located below grille member 324 thus conveying outside temperatures to the interior of housing 346. In further implementations, grille member 324 may be thermally coupled to temperature sensor 334 promoting a transfer of heat from outside the housing 346. Details on the operation of grille member 324 with these and other sensors are described in further detail later herein.

[0043] Implementations of thermostat 110 are circular in shape and have an outer ring 312 for receiving user input. Side view of thermostat 110 in FIG. 3B further highlights this curved spherical shape of cover 314 and grille member 324 gently arcing outward matching the corresponding surface portion of outer ring 312. In some implementations, the curvature of cover 314 may tend to magnify information displayed in central display area 316 thus making information easier to read by users. The shape of thermostat 110 not only provides a visually appealing accent when it is mounted on the wall but a natural shape for users to touch and adjust with their hands. Accordingly, the diameter of thermostat 110 may be approximately 80mm or another diameter that readily fits the hand. In various implementations, rotating outer ring 312 allows the user to make adjustments, such as selecting a new target temperature. For example, the target temperature may be increased by rotating the outer ring 312 clockwise and decreased by rotating the outer ring 312 counter-clockwise.

[0044] Preferably, outer ring 312 is mechanically mounted in a manner that provides a smooth yet viscous feel to the user, for further promoting an overall feeling of elegance while also reducing spurious or unwanted rotational inputs. According to various implementations, outer ring 312 rotates on plastic bearings

and uses an optical digital encoder to measure the rotational movement and/or rotational position of the outer ring 312. In accordance with alternate implementations, other technologies such as mounting the outer ring 312 on a central shaft may be employed.

[0045] In accordance with implementations of the present invention, vents 342 facilitate ventilation through gap 332 between the outer ring 312 and the body of head unit 310; through gap 344 between the head unit 310 and the backplate 340, and into the backplate 340 via vents 342. Some of this air flow may also pass through openings 318 and over sensors concealed by grille member 324. In general, air circulation through gaps 332, 344, openings 318 and vents 342 serve at least two purposes. Firstly, the air circulation allows the ambient air to reach one or more sensors located inside the thermostat. Secondly, the air circulation allows electronics in thermostat 110 to cool such that heat from the electronics does not significantly affect the sensing of the ambient air characteristics. Aside from openings 318, other entrance areas for air circulation such as gap 332, gap 344 and vents 342 are visually hidden from the user as shown in FIGs. 3A-3B, thus allowing for a simple, visually uncluttered design that facilitates ease of use by users. Optional implementations of the present invention further include a locking mechanism that is engaged via turning the screw head 322 a quarter turn.

[0046] FIGS. 4A-B illustrate a user's hand controlling a thermostat designed in accordance with implementations of the present invention. As illustrated, thermostat 110 is wall-mounted, circular in shape and has a rotatable outer ring 312 for receiving user input. Cover 314 on thermostat 110 includes central display area 316 for providing information and feedback to the user before, during and after operating thermostat 110. In some implementations, outer area 326 of cover 314 delineates an area for the user to push or otherwise manipulate thermostat 110 and thus is made opaque with paint or smoke finish. In accordance with the present invention, grille member 324 provides an additional area that the user may rest their hand while viewing or operating thermostat 110. It can be appreciated

that grille member 324 protects sensors from the user's hand yet allows the sensors to receive signals and gather information on the environment.

[0047] Head unit 310 of thermostat 110 slides on to backplate (not shown) and further includes head unit front 402 and head unit frame 404. The head unit front 402 includes outer ring 312, central display area 316 and outer area 326 of cover 314 and grille member 324 designed in accordance with implementations of the present invention. A portion of the electronics and sensors (not shown) in thermostat 110 are also included within head unit front 402.

[0048] According to some implementations, for the combined purposes of inspiring user confidence and further promoting visual and functional elegance, the thermostat 110 is controlled by only two types of user input, the first being a rotation of the outer ring 312 as illustrated in FIG. 4A (also referred to as a "rotate ring"), and the second being an inward push on the head unit front 402 until an audible and/or tactile "click" occurs as illustrated in FIG. 4B. According to some implementations, the inward push illustrated in FIG. 4B only causes the outer ring 312 to move forward, while in other implementations the entire head unit front 402 moves inwardly together when pushed. In some implementations, cover 314 and grille member 324 do not rotate with outer ring 312.

[0049] According to some implementations, multiple types of user input may be generated depending on the way a pushing inward of head unit front 402 is effectuated. In some implementations a single brief push inward of head unit front 402 until the audible and/or tactile click occurs followed by a release (single click) can be interpreted as one type of user input (also referred to as an "inward click"). In other implementations, pushing the head unit front 402 in and holding with an the inward pressure for an amount of time such as 1-3 seconds can be interpreted as another type of user input (also referred to as a "press and hold"). According to some further implementations, other types of user input can be effectuated by a user such as double and/or multiple clicks, and pressing and holding for longer and/or shorter periods of time. According to other implementations, speed-sensitive or acceleration-sensitive rotational inputs may also be implemented to

create further types of user inputs (e.g., a very large and fast leftward rotation specifies an "Away" occupancy state, while a very large and fast rightward rotation specifies an "Occupied" occupancy state).

[0050] FIGS. 5A-5G illustrate a thermostat in various states of disassembly and the position of grille member 324 designed in accordance with the present invention as it relates to sensors and other components. The disassembled view of thermostat 110 in FIG. 5A illustrates head unit 310 slidably removed from backplate 340. In this configuration, it can be appreciated that backplate 340 can function as a wall dock to the balance of the thermostat 110 contained in head unit 310 thereby contributing to ease of installation, configuration and upgrading, according to some implementations. For example, in such implementations a new, upgraded or refurbished head unit 310 may be placed over an existing backplate 340 without requiring rewiring or remounting of thermostat 110 on the wall.

[0051] As previously illustrated and described, thermostat 110 is wall mounted having a circular shape and rotatable ring 312 for receiving user input. Thermostat 110 has a cover 314 that includes a central display area 316 and outer area 326. Head unit 310 portion of thermostat 110 slides onto and is affixed to back plate 340. According to some implementations the connection of the head unit 310 to backplate 340 can be accomplished using magnets, bayonet, latches and catches, tabs or ribs with matching indentations, or simply friction on mating portions of the head unit 310 and backplate 340.

[0052] According to some implementations, a locking mechanism is optionally provided wherein a post 502 on the backplate 340 is engaged by a quarter turn of a latch using a flat head screw head or other type of screw heads connected with the latch. For example, a less common type of screw head such as a hex or torx may be used to provide greater security and deter removal of head unit 310 when thermostat 110 is installed in public locations. According to some implementations, the head unit 310 includes a processing system 504, display driver 508 and a wireless communications system 510. The processing system 504 is adapted to cause the display driver 508 and central display area 316 to display information to

the user, and to receiver user input via the rotating ring 312. The processing system 504, according to some implementations, is capable of maintaining and updating a thermodynamic model for the enclosure in which the HVAC system is installed. For further detail on the thermodynamic modeling, see U.S. Patent Ser. No. 12/881,463 filed September 14, 2010, which is incorporated by reference herein. According to some implementations, the wireless communications system 510 is used to communicate with a combination of devices such as personal computers, other thermostats or remote devices and/or HVAC system components.

[0053] Electronics 512 and temperature sensor 514 are ventilated via vents 342 in backplate 340. A bubble level 516 is provided to aid in correctly orienting the thermostat 110 when it is mounting on a wall. Wire connectors 518 are provided to allow for connection to HVAC system wires. Connection terminal 520 provides electrical connections between the head unit 310 and backplate 340.

[0054] FIGS. 5B-C illustrate a top and bottom view of a thermostat backplate in accordance with implementations of the present invention. The backplate 340 is mounted on a wall using screws through two openings: round hole 522 and slotted hole 524. By using a slotted hole 524, the user or installer can make small adjustments in the angle of mounting of backplate 340. As shown in FIG. 5B, backplate 340 includes bubble level 516 including a window 526 through which the user can check and make a level mounting of backplate 340 on a wall. The HVAC system wires pass through a large rectangular opening 528 and are connected to wire connectors 518. According to some implementations, eight wire connectors are provided as shown in FIG. 5B, and labeled with common HVAC system wire names.

[0055] FIG. 5C illustrates the backside of backplate 340 facing the wall when thermostat 110 is wall mounted. In one implementation, a temperature sensor 514 (which, generally speaking, can be of coarser precision in comparison to the head unit temperature sensor 334, although the scope of the present teachings is not so limited) included in backplate 340 which allows the backplate 340 to operate as a functioning thermostat even when the head unit 310 has been removed. For

example, the electronics 512 in backplate 340 includes a microcontroller (MCU) processor, and driver circuitry for opening and closing the HVAC control circuits. For example, these control circuits can be used for turning on and turning off the one or more HVAC functions such as heating and cooling. The electronics 512 also includes flash memory which is used to store the series of programmed settings that take effect at different times of the day. For example, a default set of programmed set point changes in flash memory may be carried out even when the head unit 310 in FIG. 5A is not attached to the backplate 340. According to some implementations, the electronics 512 also includes power harvesting circuitry so as to obtain power from the HVAC control circuit(s) even when an HVAC common power wire is not available.

[0056] FIGS. 5D-5E illustrates a perspective view of the head unit 310 portion of the thermostat 110 assembled as a single component and disassembled into multiple subcomponents. In the assembled single component illustrated in FIG. 5D, head unit 310 includes a head unit front 402 and head unit frame 404. Head unit 310 in FIG. 5D is conveniently designed to be separated from backplate (not shown) and facilitates easy repair, replacement or upgrades to the electronics, firmware and software in the head unit 310. For example, the thermostat may be upgraded by removing head unit 310 from the backplate and replacing with an upgraded or new head unit 310.

[0057] As illustrated in FIG. 5E, head unit front 402 may further be disassembled into grille member 324, cover 314, head unit frontal assembly 530 and outer ring 312. Head unit frontal assembly 530 is slidably mounted and secured to head unit frame 404 urging outer ring 312 to be held between the head unit frontal assembly 530 and head unit frame 404. In some implementations, outer ring 312 is rotatable and receives user inputs through clockwise or counterclockwise rotations while head unit frontal assembly 530 remains fixed in position.

[0058] Cover 314 fits over and protects display module 532, which is used to display information to a user viewing the thermostat. As an example, information

displayed by display module 532 may include a current temperature such as a temperature of 75 degrees displayed by display module 532 in the central display area 316 in FIG. 3A. In other implementations, display module 532 may also display a variety of other information to the user including setpoints, configuration information, diagnostics and thermostat programming details. Display module 532 in accordance with some implementations is a dot-matrix layout (individually addressable) such that arbitrary shapes can be generated, rather than being a segmented layout. According to other implementations, a combination of dot-matrix layout and a segmented layout may also be employed by display module 532.

[0059] Display module 532 may be implemented in accordance with the present invention using a back-lit color liquid crystal display (LCD). According to other implementations, display module 532 may use display technologies such as passive and/or monochrome LCD, organic light-emitting diode (OLED), or electronic ink (e-ink) display technology. E-ink is a particularly well suited display technology for some implementations as it continues to reflect light while not drawing power and energy. Additionally, E-ink display technology implemented in accordance with the present invention also conserves energy as it does not require a particularly short refresh time.

[0060] Grille member 324 may be used to conceal and protect a number of different sensors in accordance with the present invention. In some implementations, these sensors may include a temperature sensor 334 and PIR motion sensor 330 sensor integrated with the thermostat. In the implementation illustrated in FIG. 5E, PIR motion sensor 330 includes a Fresnel lens 534 to help direct infrared radiation onto the infrared sensitive elements (not shown in FIG. 5E) of the PIR motion sensor 330. Grille member 324 acts as a cover yet passes a substantial amount of infrared radiation through Fresnel lens 534 and onto the infrared sensitive elements. As will be described in detail later herein, the design of grille member 324 allows PIR motion sensor 330 to detect occupants movement across a wide range of angles in the vicinity of the thermostat even when covered by grille member 324.

[0061] Likewise, grille member 324 may also conceal temperature sensor 334 situated near the bottom of edge of Fresnel lens 534 as indicated in FIG. 5E. The grille member 324 helps protect the temperature sensor 334 from being damaged and contributes to the overall streamlined appeal of the thermostat. Additionally, constructing grille member 324 from a heat conducting material, such as metal or a metallic alloy, helps absorb the ambient heat in the vicinity of the thermostat and deliver to temperature sensor 334 for a more accurate measurement.

[0062] FIGS. 5F-5G illustrates a perspective view of the head unit frontal assembly 530 appearing as one assembled component and disassembled into multiple subcomponents. In some implementations, head unit frontal assembly 530 includes at least three subcomponents: a display module 532, a head unit front plate 536 and head unit circuit board 538. Display module 532 serves to display information to a user and may be separated from head unit front plate 536 as illustrated.

[0063] In accordance with some implementations, head unit front plate 536 is disposed to receive temperature sensor 334 in a temperature sensor slot 540. The temperature sensor 334 is affixed to, and extends approximately normal to the planar surface of head unit circuit board 538. In contrast, PIR motion sensor 330 is coplanar with the surface of head unit circuit board 538 and thus also normal to the temperature sensor 334. When head unit circuit board 538 is slidably mounted to the backside of head unit front plate 536, temperature sensor 334 is urged along the normal to head unit circuit board 538 and inserted into temperature sensor slot 540. Likewise, slidably mounting head unit circuit board 538 into the backside of head unit front plate 536 situates the infrared sensitive elements 331 behind Fresnel lens 534 and making up PIR motion sensor 330 as previously illustrated in FIG. 5E and FIG. 3A.

[0064] Perspective view of partially assembled head unit front 402 in FIG. 6 shows the positioning of grille member 324 designed in accordance with aspects of the present invention with respect to several sensors used by the thermostat. In some implementations, head unit front 402 as illustrated in FIG. 6 includes the

outer ring 312, grille member 324 positioned on head unit front assembly 530 with cover 314 removed as illustrated. Head unit front 402 makes up a portion of head unit 310 and housing 346 illustrated in FIG. 3B, which is used to enclose the thermostat.

[0065] In some implementations, grille member 324 covers one or more sensors used by the thermostat and is attached to a forward-facing surface of the housing by way of the head unit front assembly 530. The design and position of grille member 324 creates a smooth, sleek and visually pleasing impression to users while also serving to improve the durability and function of the one or more sensors it conceals. In some implementations, benefits from grille member 324 may be attributed to a shape of openings 318, the materials used to make grille member 324 or a positioning of grille member 324 with respect to one or more sensors, as well as combinations thereof.

[0066] In some implementations, placement of grille member 324 over PIR motion sensor 334 as illustrated in FIG. 6 conceals and protects the sensor. For example, grille member 324 may protect PIR motion sensor 334 during manufacture, shipping, installation or use from a user's hands operating the thermostat as illustrated in FIG. 4A and 4B. Concealment not only protects the PIR motion sensor 334 but also promotes visually pleasing thermostat suitable for use in a variety of residential and commercial applications.

[0067] In accordance with implementations of the present invention, one or more openings 318 in the grille member 324 design allow the PIR motion sensor 334, despite being concealed, to detect the lateral motion of occupants in a room or area. Positioning PIR motion sensor 334 along the forward-facing surface of head unit front assembly 530 allows the sensor's radiation receiving elements to continue to detect the infrared radiation emitted by these occupants in the vicinity of the thermostat. As described in further detail later herein, PIR motion sensor 334 may detect occupants moving laterally due to the shape of openings 318, which are slit-like and elongated along a substantially horizontal direction. In some implementations, the Fresnel lens 534 helps focus the radiation from these

occupants onto the infrared sensitive sensor elements (not shown in FIG. 6) of the PIR motion sensor 334. For example, the grille member 324 has one or more openings placed over the radiation receiving elements and Fresnel lens 534 of the PIR motion sensor 334. While grille member 324 may be constructed from a variety of materials including metal, plastic, glass, carbon-composite, and metallic alloy, it is generally preferable for purposes of increased temperature sensing precision for the grille member to be made of a material with a high thermal conductivity, such as a metal or metallic alloy.

[0068] Grille member 324 may also enhance the operation of sensors in the thermostat. In some implementations, temperature sensor 334 is not only protected but the detection of ambient temperatures is enhanced by placement of grille member 324. For example, where grille member 324 is made from a thermally conductive material such as a metal or metallic alloy, it operates as a "thermal antenna" and absorbs ambient temperature from a broader area than temperature sensor 334 could otherwise sample. Temperature sensor 334 positioned substantially normal to head unit circuit board 538 towards grille member 324 may be close enough to receive heat absorbed by grille member 324.

[0069] In some implementations, applying a thermally conductive materials 542, such as a paste, thermal adhesive or thermal grease between temperature sensor 334 and inward facing surface of grille member 324 improves the thermal conductivity between these two components and the accuracy of the temperature measurement. Thermally coupling grille member 324 with temperature sensor 334 assists temperature sensor 334 to measure the ambient air temperature outside rather than inside of the housing holding the thermostat.

[0070] Some implementations of temperature sensor 330 may use a pair of thermal sensors to more accurately measure ambient temperature. A first or upper thermal sensor 330a associated with temperature sensor 330 tends to gather temperature data closer to the area outside or on the exterior of the thermostat while a second or lower thermal sensor 330b tends to collect temperature data more closely associated with the interior of the housing. In one implementation,

each of the temperature sensors 330a and 330b comprises a Texas Instruments TMP112 digital temperature sensor chip. To more accurately determine the ambient temperature, the temperature taken from the lower thermal sensor 330b is taken into consideration in view of the temperatures measured by the upper thermal sensor 330a and when determining the effective ambient temperature. This configuration can advantageously be used to compensate for the effects of internal heat produced in the thermostat by the microprocessor(s) and/or other electronic components therein, thereby obviating or minimizing temperature measurement errors that might otherwise be suffered. In some implementations, the accuracy of the ambient temperature measurement may be further enhanced by thermally coupling upper thermal sensor 330a of temperature sensor 330 to grille member 324 as the upper thermal sensor 330a better reflects the ambient temperature than lower thermal sensor 334b. Details on using a pair of thermal sensors to determine an effective ambient temperature is disclosed in United States Patent No. 4,741,476 issued May 3, 1988 entitled, "Digital Electronic Thermostat With Correction for Triac Self Heating", by Russo et al. incorporated by reference herein for all purposes.

[0071] With exemplary reference to FIGS. 5F-5G and FIG. 6, the mutual positioning and configuration of the grille member 324, Fresnel lens 534, PIR sensor 330, upper thermal sensor 330a, and lower thermal sensor 330b provides for an advantageous and synergistic combination of physical compactness and visual sensor concealment, along with promoting ambient temperature sensor accuracy and preserving PIR occupancy sensing functionality. In some ways this can be seen as one beneficial outcome of a “dual use” of a key volume of space lying between the Fresnel lens 534 and the surface of the PIR sensor 334, wherein the necessary spacing between the Fresnel lens 534 and the surface of the PIR sensor 334 also serves as the space across which a temperature gradient between the lower thermal sensor 330b and upper thermal sensor 330a is formed and sensed, this temperature gradient being leveraged to provide better ambient temperature sensing than would be provided by a single-point thermal sensor. In

turn, the compactness promoted by the configuration of elements 534/334/330a/330b allows them to be placed behind the grille 324 without the necessity of substantially enlarging the outward protrusion of the overall housing. At the same time, for preferred implementations in which the grille member 324 is metallic and thermally coupled to the upper thermal sensor 330a, the high thermal conductivity of the grille member 324 still further enhances the accuracy of temperature measurement by acting as a "thermal antenna," which is in addition to its other functions of concealment and ambient air access.

[0072] FIG. 7A-7B illustrates in detail how infrared sources interact with slit-like openings in a grille member designed in accordance with the present invention. To highlight the interactions, FIG. 7A illustrates grille member 324 with openings 318 and PIR motion sensor 330 positioned behind grille member 324 as it would be in a thermostat designed in accordance with the present invention. In accordance with some implementations, openings 318 are slit-like along a substantially horizontal direction as illustrated. Infrared sources may sweep across a continuous wide range of angles such as by the lateral movement an occupant walking across a room or other area. To represented this range, FIG. 7A has arrows representing a left infrared source 702, a center infrared source 706 and a right infrared source 704. For example, an occupant walking across a room in front of a thermostat with grille member 324 may first emit radiation appearing as a left infrared source 702 then gradually a center infrared source 706 and then gradually a right infrared source 704.

[0073] As FIG. 7A shows schematically, the slit-like openings 318 of grille member 324 allow a wide range of infrared sources to pass through towards PIR motion sensor 330. Both left infrared source 702 and right infrared source 704 may pass along the elongated horizontal openings 318 as indicated by the arrows of these sources. Center infrared source 706 also passes through openings 318 in grille member 324 as allowed by the vertical height of one or more of the elongated slits. It therefore can also be appreciated that the openings 318 from grille member 324 having a slit-like shape allow the PIR motion sensor 330 to detect the radiation

emitted by an occupant moving laterally across a wide-range of angles near the thermostat. For example, grille member 324 can detect an occupant moving on the left side of grille member 324 as a left infrared source 702 or on the right side of grille member 324 as a right infrared source 704. A person moving approximately in the center of grille member 324 would appear as a center infrared source 706 and also pass through openings 318 towards PIR motion sensor 330. Indeed, grille member 324 would also pass many other infrared sources at angles between left infrared source 702, center infrared source 706 and right infrared source 704 through openings 318 towards PIR motion sensor 330.

[0074] FIG. 7B illustrates the effect of an occupant moving past a PIR motion sensor in a thermostat covered by a grille member of the present invention. The PIR motion sensor (not shown in FIG. 7B) sits behind grille member 324 much like PIR motion sensor 330 in FIG. 7A. The PIR motion sensor is capable of detecting a lateral change of radiation 710 caused by a laterally moving source of infrared radiation such as a person walking in a room. To make the occupancy detector work properly, these lateral changes in radiation 710 caused by the occupant must be distinguished from overall changes in the infrared radiation caused by sunlight and ambient heat sometimes referred to as the common-mode signal.

[0075] In some implementations, the PIR motion sensor has a pair of differential sensing elements setup with opposing polarity to reject the common-mode signal produced by radiation 710. When occupant 708 is not present or not moving, sudden overall changes in radiation 710 caused by sunlight, heat or vibration produce complimentary signals from the pair of differential sensing elements simultaneously. The complimentary signals from the pair of differential sensing elements immediately cancel out these false-positive or common-mode signals.

[0076] In comparison, an occupant 708 moving laterally in the direction of the arrows in FIG. 7B across a room or other space near thermostat 110 creates a local change in radiation 710. The local change in radiation 710 is detected and not canceled out with the common-mode signal portion of radiation 710 as the sensing

elements are arranged along a horizontal axis and triggered sequentially, not simultaneously, by the lateral movement,. Because openings 318 in grille member 324 are slit-like, radiation 710 enters thermostat 110 and is detected by PIR motion sensor whether the occupant 708 is moving laterally from the far right, far left or laterally near the center area near the thermostat.

[0077] FIGS. 8A-8D illustrate altering the openings of a grille member along a vertical distance to change the sensitivity of a PIR motion sensor in accordance with aspects of the present invention. Generally, the PIR motion sensor's sensitivity to the height of occupants can be changed by varying the vertical span of the openings in a grille member. In accordance with some implementations, a grille member 802 illustrated in FIG. 8A is located on a forward-facing surface of the thermostat 810 mounted on a wall. Thermostat 810 is partially shown in FIG. 8B for convenience yet is similar to thermostat 110 described and illustrated in FIG. 3A. Grille member 802 in FIG. 8A has several rows of openings 806, each having a slit-like shape and organized along a vertical span 804. Accordingly, a PIR motion sensor (not shown in FIGS. 8A-8D) behind grille member 802 used with thermostat 810 in FIG. 8B and has an angle of sensitivity 808 or . If an occupant's height is within the angle of sensitivity 808 then the PIR motion sensor in thermostat 810 in FIG. 8B should be able to detect the radiation emitted from the occupant's lateral movement. Conversely, an occupant whose height falls below the angle of sensitivity 808, is not likely to be detected by the PIR motion sensor in thermostat 810 in FIG. 8B.

[0078] In accordance with an alternate implementation, sensitivity to height may be decreased as illustrated in FIG. 8C by reducing the number of rows or openings across the vertical span. Compared with grille member 802, the number of rows of openings 816 in grille member 812 illustrated in FIG. 8C are fewer in number than the rows of openings 806. Moreover, openings 816 in grille member 812 are spread over a vertical span 814 that is both narrower and positioned higher than vertical span 804 in grille member 802. Consequently, using grille member 812 in thermostat 810 in FIG. 8D results in a narrower angle of sensitivity 818 or

compared with the angle of sensitivity 808 or previously described. For example, a PIR motion sensor behind grille member 812 on thermostat 810 in FIG. 8D will not detect occupants whose height is outside the angle of sensitivity 818 or . As a result, the same occupants detected by thermostat 810 with grille member 802 might not be tall enough to be detected by thermostat 810 using grille member 812. Depending on the installation, it may be more desirable to use a grille member more like grille member 812 in order to limit detection of occupants that are taller in height. To detect occupants that may be shorter in height, use of grille member 802 in thermostat 810 may be more desirable.

[0079] Since FIGS. 8A-8D are meant to be illustrative, the shape, number, size, organization and location of openings in grille member 802 and 812 are but exemplary and used for comparison purposes. Indeed, the designs of grille members of the present invention should not be limited by specific sizes, number of openings, specific shapes or the absolute or relative positions of these or other features.

[0080] In some implementations, different grille members may be manufactured with a different number of openings having slit-like dimensions arranged in one or more rows. For example, a person installing thermostat 810 may select and install different grille members depending on the desired sensitivity to the heights of the occupants and the location of the thermostat 810 on a wall or other location. In other implementations, the installer may use a mask member attached to the back openings in the grille member to modify the openings and adjust the sensitivity to height. Instead of manufacturing different grille members, one grille member can be altered using the mask member to cover or uncover the desired number of openings in the grille member. For example, the mask member may be plastic or metal fittings with slit-like dimensions applied to the backside of grille member 802 that fill one or more of openings 806. These fittings of the mask member may be finished in the same tone or color as the surface of grille member 802 in order to blend into the overall appearance of the grille member 802. Accordingly, the sensitivity to the height of occupants may be varied depending on the coverage by

the mask member of the substantially horizontal slit-like openings used to pass the emitted radiation to the receiving surface of the PIR motion sensor.

[0081] Referring to FIG. 9, a flow chart diagram outlines the operations associated with integrating sensor capabilities with a thermostat and grille member in accordance with aspects of the present invention. In some implementations, the integration operations include providing a housing for the thermostat designed to provide an attractive and durable configuration for one or more integrated sensors (902). Housing for the thermostat may be housing 346 and thermostat 110 illustrated in FIG. 3B as previously described. The thermostat is enclosed by the housing with a forward-facing surface for a cover and grille member in accordance with aspects of the present invention. The one or more integrated sensors protected by the housing may include an occupancy sensor such as a PIR motion detector, a temperature sensor, a humidity sensor, a proximity sensor or other sensors that might be useful in operating a thermostat. Placing these and other sensors inside the housing protects them from being accidentally jarred or broken during manufacture, shipping, installation or use. Because sensors are protected inside the housing, they are more likely to retain their calibration and provide accurate measurement results for the thermostat.

[0082] Additionally, the integration operations may also provide a passive infrared (PIR) motion sensor disposed inside the housing and used to sense occupancy in the vicinity of the thermostat (904). In some implementations, the PIR motion sensor has a radiation receiving surface able to detect the radiation emitted towards the forward-facing surface of the housing by the lateral movement of a nearby occupant. Occupancy information detected by the PIR motion sensor may be used by the thermostat to better adjust heating or cooling operations of an HVAC in an enclosure such as a residential house. In some implementations, a thermostat may use the occupancy information to turn the HVAC on when occupancy is detected and off when no occupancy is detected by the PIR motion sensor. In alternate implementations, the thermostat may use the occupancy information generated by the PIR motion sensor as part of a heuristic that learns

when an enclosure is likely to be occupied or unoccupied and anticipates the heating or cooling requirements. This heuristic may use real-time and historic geographic weather trends and other factors combined with learned occupancy patterns to determine when the enclosure needs cooling or heating. A temperature sensor disposed inside the housing may also be provided to detect the ambient temperature in the vicinity of the thermostat. The PIR motion sensor and temperature sensor may be similar to PIR motion sensor 330 and temperature sensor 334 respectively illustrated in FIG. 6 as previously described.

[0083] Integration operations in accordance with the present invention may further attach a grille member along a forward-facing surface of the housing and placed over the radiation receiving surface of the PIR motion sensor (906). As previously described, the grille member may substantially conceal and protects the PIR motion sensor disposed inside the housing. Concealing the PIR motion sensor promotes a visually pleasing quality of the thermostat as well as protects the PIR motion sensor during manufacture, shipment, installation and use. In some implementations, the grille member may be similar to grille member 324 previously described and illustrated in accordance with FIG. 3A. Accordingly, the grille member may be manufactured from one or more materials selected from a set of materials including: metal, plastic, glass, carbon-composite, metallic-carbon composite and metallic alloy. The grille member may be a thermally conductive material such as a metal or metal alloy and may be thermally coupled to the temperature sensor also disposed inside the housing of the thermostat. In some implementations, thermally coupling the temperature sensor to the grille member assists with the temperature sensors ability to measure an ambient temperature of air measured outside of the housing rather than inside of the housing.

[0084] FIGS. 18A-B illustrate a visually pleasing thermostat 1800 having a user-friendly interface, according to some embodiments. The thermostat 1800 of FIGS. 18A-18B is generally similar to the thermostat 110 of FIGS. 3A-3B, *supra*, with additional and/or alternative aspects thereof being described hereinbelow. The term “thermostat” is used hereinbelow to represent a particular type of

Versatile Sensing and Control Unit (VSCU) that is described in the commonly assigned U.S. Prov. Ser. No. 61/429,093, *supra*, that is particularly applicable for HVAC control in an enclosure. Although "thermostat" and "VSCU unit" may be seen as generally interchangeable for the contexts of HVAC control of an enclosure, it is within the scope of the present teachings for each of the embodiments hereinabove and hereinbelow to be applied to such VSCU units having control functionality over measurable characteristics other than temperature (*e.g.*, pressure, flow rate, height, position, velocity, acceleration, capacity, power, loudness, brightness) for any of a variety of different control systems involving the governance of one or more measurable characteristics of one or more physical systems, and/or the governance of other energy or resource consuming systems such as water usage systems, air usage systems, systems involving the usage of other natural resources, and systems involving the usage of various other forms of energy. Unlike many prior art thermostats, thermostat 1800 preferably has a sleek, simple, uncluttered and elegant design that does not detract from home decoration, and indeed can serve as a visually pleasing centerpiece for the immediate location in which it is installed. Moreover, user interaction with thermostat 1800 is facilitated and greatly enhanced over known conventional thermostats by the design of thermostat 1800. The thermostat 1800 includes control circuitry and is electrically connected to an HVAC system, such as is shown with thermostat 110 in FIGS. 1 and 2, *supra*. Thermostat 1800 is wall mounted, is circular in shape, and has an outer rotatable ring 1812 for receiving user input. Thermostat 1800 is circular in shape in that it appears as a generally disk-like circular object when mounted on the wall. Thermostat 1800 has a large front face lying inside the outer ring 1812. According to some embodiments, thermostat 1800 is approximately 80 mm in diameter. The outer rotatable ring 1812 allows the user to make adjustments, such as selecting a new target temperature. For example, by rotating the outer ring 1812 clockwise, the target temperature can be increased, and by rotating the outer ring 1812 counter-clockwise, the target temperature can be decreased. The front face of the thermostat 1800 comprises a clear cover 1814 that according to some

embodiments is polycarbonate, and a metallic portion 1824 preferably having a number of slots formed therein as shown. According to some embodiments, the surface of cover 1814 and metallic portion 1824 form a common outward arc or spherical shape gently arcing outward, and this gentle arcing shape is continued by the outer ring 1812.

[0085] Although being formed from a single lens-like piece of material such as polycarbonate, the cover 1814 has two different regions or portions including an outer portion 1814o and a central portion 1814i. According to some embodiments, the cover 1814 is painted or smoked around the outer portion 1814o, but leaves the central portion 1814i visibly clear so as to facilitate viewing of an electronic display 1816 disposed thereunderneath. According to some embodiments, the curved cover 1814 acts as a lens that tends to magnify the information being displayed in electronic display 1816 to users. According to some embodiments the central electronic display 1816 is a dot-matrix layout (individually addressable) such that arbitrary shapes can be generated, rather than being a segmented layout. According to some embodiments, a combination of dot-matrix layout and segmented layout is employed. According to some embodiments, central display 1816 is a backlit color liquid crystal display (LCD). An example of information displayed on the electronic display 1816 is illustrated in FIG. 18A, and includes central numerals 1820 that are representative of a current setpoint temperature. According to some embodiments, metallic portion 1824 has number of slot-like openings so as to facilitate the use of a passive infrared motion sensor 1830 mounted therebeneath. The metallic portion 1824 can alternatively be termed a metallic front grille portion. Further description of the metallic portion/front grille portion is provided in the commonly assigned U.S. Ser. No. 13/199,108, *supra*. The thermostat 1800 is preferably constructed such that the electronic display 1816 is at a fixed orientation and does not rotate with the outer ring 1812, so that the electronic display 1816 remains easily read by the user. For some embodiments, the cover 1814 and metallic portion 1824 also remain at a fixed orientation and do not rotate with the outer ring 1812. According to one embodiment in which the

diameter of the thermostat 1800 is about 80 mm, the diameter of the electronic display 1816 is about 45 mm. According to some embodiments an LED indicator 1880 is positioned beneath portion 1824 to act as a low-power-consuming indicator of certain status conditions. For, example the LED indicator 1880 can be used to display blinking red when a rechargeable battery of the thermostat (see FIG. 4A, infra) is very low and is being recharged. More generally, the LED indicator 1880 can be used for communicating one or more status codes or error codes by virtue of red color, green color, various combinations of red and green, various different blinking rates, and so forth, which can be useful for troubleshooting purposes.

[0086] Motion sensing as well as other techniques can be use used in the detection and/or predict of occupancy, as is described further in the commonly assigned U.S. Ser. No. 12/881,430, *supra*. According to some embodiments, occupancy information is used in generating an effective and efficient scheduled program. Preferably, an active proximity sensor 1870A is provided to detect an approaching user by infrared light reflection, and an ambient light sensor 1870B is provided to sense visible light. The proximity sensor 1870A can be used to detect proximity in the range of about one meter so that the thermostat 1800 can initiate "waking up" when the user is approaching the thermostat and prior to the user touching the thermostat. Such use of proximity sensing is useful for enhancing the user experience by being "ready" for interaction as soon as, or very soon after the user is ready to interact with the thermostat. Further, the wake-up-on-proximity functionality also allows for energy savings within the thermostat by "sleeping" when no user interaction is taking place our about to take place. The ambient light sensor 1870B can be used for a variety of intelligence-gathering purposes, such as for facilitating confirmation of occupancy when sharp rising or falling edges are detected (because it is likely that there are occupants who are turning the lights on and off), and such as for detecting long term (e.g., 24-hour) patterns of ambient light intensity for confirming and/or automatically establishing the time of day.

[0087] According to some embodiments, for the combined purposes of inspiring user confidence and further promoting visual and functional elegance, the

thermostat 1800 is controlled by only two types of user input, the first being a rotation of the outer ring 1812 as shown in FIG. 18A (referenced hereafter as a "rotate ring" or "ring rotation" input), and the second being an inward push on an outer cap 1808 (see FIG. 18B) until an audible and/or tactile "click" occurs (referenced hereafter as an "inward click" or simply "click" input). For the embodiment of FIGS. 18A-18B, the outer cap 1808 is an assembly that includes all of the outer ring 1812, cover 1814, electronic display 1816, and metallic portion 1824. When pressed inwardly by the user, the outer cap 1808 travels inwardly by a small amount, such as 0.5 mm, against an interior metallic dome switch (not shown), and then springably travels back outwardly by that same amount when the inward pressure is released, providing a satisfying tactile "click" sensation to the user's hand, along with a corresponding gentle audible clicking sound. Thus, for the embodiment of FIGS. 18A-18B, an inward click can be achieved by direct pressing on the outer ring 1812 itself, or by indirect pressing of the outer ring by virtue of providing inward pressure on the cover 1814, metallic portion 1814, or by various combinations thereof . For other embodiments, the thermostat 1800 can be mechanically configured such that only the outer ring 1812 travels inwardly for the inward click input, while the cover 1814 and metallic portion 1824 remain motionless. It is to be appreciated that a variety of different selections and combinations of the particular mechanical elements that will travel inwardly to achieve the "inward click" input are within the scope of the present teachings, whether it be the outer ring 1812 itself, some part of the cover 1814, or some combination thereof. However, it has been found particularly advantageous to provide the user with an ability to quickly go back and forth between registering "ring rotations" and "inward clicks" with a single hand and with minimal amount of time and effort involved, and so the ability to provide an inward click directly by pressing the outer ring 1812 has been found particularly advantageous, since the user's fingers do not need to be lifted out of contact with the device, or slid along its surface, in order to go between ring rotations and inward clicks. Moreover, by virtue of the strategic placement of the electronic display 1816 centrally inside the

rotatable ring 1812, a further advantage is provided in that the user can naturally focus their attention on the electronic display throughout the input process, right in the middle of where their hand is performing its functions. The combination of intuitive outer ring rotation, especially as applied to (but not limited to) the changing of a thermostat's setpoint temperature, conveniently folded together with the satisfying physical sensation of inward clicking, together with accommodating natural focus on the electronic display in the central midst of their fingers' activity, adds significantly to an intuitive, seamless, and downright fun user experience. Further descriptions of advantageous mechanical user-interfaces and related designs, which are employed according to some embodiments, can be found in U.S. Ser. No. 13/033,573, *supra*, U.S. Ser. No. 29/386,021, *supra*, and U.S. Ser. No. 13/199,108, *supra*.

[0088] FIG. 18C illustrates a cross-sectional view of a shell portion 1809 of a frame of the thermostat of FIGS. 18A-B, which has been found to provide a particularly pleasing and adaptable visual appearance of the overall thermostat 1800 when viewed against a variety of different wall colors and wall textures in a variety of different home environments and home settings. While the thermostat itself will functionally adapt to the user's schedule as described herein and in one or more of the commonly assigned incorporated applications, *supra*, the outer shell portion 1809 is specially configured to convey a "chameleon" quality or characteristic such that the overall device appears to naturally blend in, in a visual and decorative sense, with many of the most common wall colors and wall textures found in home and business environments, at least in part because it will appear to assume the surrounding colors and even textures when viewed from many different angles. The shell portion 1809 has the shape of a frustum that is gently curved when viewed in cross-section, and comprises a sidewall 1876 that is made of a clear solid material, such as polycarbonate plastic. The sidewall 1876 is backpainted with a substantially flat silver- or nickel- colored paint, the paint being applied to an inside surface 1878 of the sidewall 1876 but not to an outside surface 1877 thereof. The outside surface 1877 is smooth and glossy but is not painted.

The sidewall 1876 can have a thickness T of about 1.5 mm, a diameter d1 of about 78.8 mm at a first end that is nearer to the wall when mounted, and a diameter d2 of about 81.2 mm at a second end that is farther from the wall when mounted, the diameter change taking place across an outward width dimension "h" of about 22.5 mm, the diameter change taking place in either a linear fashion or, more preferably, a slightly nonlinear fashion with increasing outward distance to form a slightly curved shape when viewed in profile, as shown in FIG. 18C. The outer ring 1812 of outer cap 1808 is preferably constructed to match the diameter d2 where disposed near the second end of the shell portion 1809 across a modestly sized gap g1therefrom, and then to gently arc back inwardly to meet the cover 1814 across a small gap g2. It is to be appreciated, of course, that FIG. 18C only illustrates the outer shell portion 1809 of the thermostat 1800, and that there are many electronic components internal thereto that are omitted from FIG. 18C for clarity of presentation, such electronic components being described further hereinbelow and/or in other ones of the commonly assigned incorporated applications, such as U.S. Ser. No. 13/199,108, *supra*.

[0089] According to some embodiments, the thermostat 1800 includes a processing system 1860, display driver 1864 and a wireless communications system 1866. The processing system 1860 is adapted to cause the display driver 1864 and display area 1816 to display information to the user, and to receiver user input via the rotatable ring 1812. The processing system 1860, according to some embodiments, is capable of carrying out the governance of the operation of thermostat 1800 including the user interface features described herein. The processing system 1860 is further programmed and configured to carry out other operations as described further hereinbelow and/or in other ones of the commonly assigned incorporated applications. For example, processing system 1860 is further programmed and configured to maintain and update a thermodynamic model for the enclosure in which the HVAC system is installed, such as described in U.S. Ser. No. 12/881,463, *supra*. According to some embodiments, the wireless communications system 1866 is used to communicate with devices such as

personal computers and/or other thermostats or HVAC system components, which can be peer-to-peer communications, communications through one or more servers located on a private network, or and/or communications through a cloud-based service.

[0090] FIGS. 19A-19B illustrate exploded front and rear perspective views, respectively, of the thermostat 1800 with respect to its two main components, which are the head unit 1900 and the back plate 2000. Further technical and/or functional descriptions of various ones of the electrical and mechanical components illustrated hereinbelow can be found in one or more of the commonly assigned incorporated applications, such as U.S. Ser. No. 13/199,108, *supra*. In the drawings shown, the "z" direction is outward from the wall, the "y" direction is the head-to-toe direction relative to a walk-up user, and the "x" direction is the user's left-to-right direction.

[0091] FIGS. 20A-20B illustrate exploded front and rear perspective views, respectively, of the head unit 1900 with respect to its primary components. Head unit 1900 includes a head unit frame 1910, the outer ring 1920 (which is manipulated for ring rotations), a head unit frontal assembly 1930, a front lens 1980, and a front grille 1990. Electrical components on the head unit frontal assembly 1930 can connect to electrical components on the backplate 2000 by virtue of ribbon cables and/or other plug type electrical connectors.

[0092] FIGS. 21A-21B illustrate exploded front and rear perspective views, respectively, of the head unit frontal assembly 1930 with respect to its primary components. Head unit frontal assembly 1930 comprises a head unit circuit board 1940, a head unit front plate 1950, and an LCD module 1960. The components of the front side of head unit circuit board 1940 are hidden behind an RF shield in FIG. 21A but are discussed in more detail below with respect to FIG. 24. On the back of the head unit circuit board 1940 is a rechargeable Lithium-Ion battery 1944, which for one preferred embodiment has a nominal voltage of 3.7 volts and a nominal capacity of 560 mAh. To extend battery life, however, the battery 1944 is normally not charged beyond 450 mAh by the thermostat battery charging circuitry.

Moreover, although the battery 1944 is rated to be capable of being charged to 4.2 volts, the thermostat battery charging circuitry normally does not charge it beyond 3.95 volts. Also visible in FIG. 21B is an optical finger navigation module 1942 that is configured and positioned to sense rotation of the outer ring 1920. The module 1942 uses methods analogous to the operation of optical computer mice to sense the movement of a texturable surface on a facing periphery of the outer ring 1920. Notably, the module 1942 is one of the very few sensors that is controlled by the relatively power-intensive head unit microprocessor rather than the relatively low-power backplate microprocessor. This is achievable without excessive power drain implications because the head unit microprocessor will invariably be awake already when the user is manually turning the dial, so there is no excessive wake-up power drain anyway. Advantageously, very fast response can also be provided by the head unit microprocessor. Also visible in FIG. 21A is a Fresnel lens 1957 that operates in conjunction with a PIR motion sensor disposes thereunderneath.

[0093] FIGS. 22A-22B illustrate exploded front and rear perspective views, respectively, of the backplate unit 2000 with respect to its primary components. Backplate unit 2000 comprises a backplate rear plate 2010, a backplate circuit board 2020, and a backplate cover 2080. Visible in FIG. 22A are the HVAC wire connectors 2022 that include integrated wire insertion sensing circuitry, and two relatively large capacitors 2024 that are used by part of the power stealing circuitry that is mounted on the back side of the backplate circuit board 2020 and discussed further below with respect to FIG. 25.

[0094] FIG. 23 illustrates a perspective view of a partially assembled head unit front 1900 showing the positioning of grille member 1990 designed in accordance with aspects of the present invention with respect to several sensors used by the thermostat. In some implementations, as described further in U.S. 13/199,108, *supra*, placement of grille member 1990 over the Fresnel lens 1957 and an associated PIR motion sensor 334 conceals and protects these PIR sensing elements, while horizontal slots in the grille member 1990 allow the PIR motion sensing hardware, despite being concealed, to detect the lateral motion of

occupants in a room or area. A temperature sensor 330 uses a pair of thermal sensors to more accurately measure ambient temperature. A first or upper thermal sensor 330a associated with temperature sensor 330 tends to gather temperature data closer to the area outside or on the exterior of the thermostat while a second or lower thermal sensor 330b tends to collect temperature data more closely associated with the interior of the housing. In one implementation, each of the temperature sensors 330a and 330b comprises a Texas Instruments TMP112 digital temperature sensor chip, while the PIR motion sensor 334 comprises PerkinElmer DigiPyro PYD 1998 dual element pyrodetector.

[0095] To more accurately determine the ambient temperature, the temperature taken from the lower thermal sensor 330b is taken into consideration in view of the temperatures measured by the upper thermal sensor 330a and when determining the effective ambient temperature. This configuration can advantageously be used to compensate for the effects of internal heat produced in the thermostat by the microprocessor(s) and/or other electronic components therein, thereby obviating or minimizing temperature measurement errors that might otherwise be suffered. In some implementations, the accuracy of the ambient temperature measurement may be further enhanced by thermally coupling upper thermal sensor 330a of temperature sensor 330 to grille member 1990 as the upper thermal sensor 330a better reflects the ambient temperature than lower thermal sensor 334b. Details on using a pair of thermal sensors to determine an effective ambient temperature is disclosed in U. S. Pat. 4741476, which is incorporated by reference herein.

[0096] FIG. 24 illustrates a head-on view of the head unit circuit board 1940, which comprises a head unit microprocessor 2402 (such as a Texas Instruments AM3703 chip) and an associated oscillator 2404, along with DDR SDRAM memory 2406, and mass NAND storage 2408. For Wi-Fi capability, there is provided in a separate compartment of RF shielding 2434 a Wi-Fi module 2410, such as a Murata Wireless Solutions LBWA19XSLZ module, which is based on the Texas Instruments WL1270 chipset supporting the 802.11 b/g/n WLAN standard. For the Wi-Fi module 2410 is supporting circuitry 2412 including an oscillator 2414. For

ZigBee capability, there is provided also in a separately shielded RF compartment a ZigBee module 2416, which can be, for example, a C2530F256 module from Texas Instruments. For the ZigBee module 2416 there is provided supporting circuitry 2418 including an oscillator 2419 and a low-noise amplifier 2420. Also provided is display backlight voltage conversion circuitry 2422, piezoelectric driving circuitry 2424, and power management circuitry 2426 (local power rails, etc.). Provided on a flex circuit 2428 that attaches to the back of the head unit circuit board by a flex circuit connector 2430 is a proximity and ambient light sensor (PROX/ALS), more particularly a Silicon Labs SI1142 Proximity/Ambient Light Sensor with an I2C Interface. Also provided is battery charging-supervision-disconnect circuitry 2432, and spring/RF antennas 2436. Also provided is a temperature sensor 2438 (rising perpendicular to the circuit board in the +z direction containing two separate temperature sensing elements at different distances from the circuit board), and a PIR motion sensor 2440. Notably, even though the PROX/ALS and temperature sensors 2438 and PIR motion sensor 2440 are physically located on the head unit circuit board 1940, all these sensors are polled and controlled by the low-power backplate microcontroller on the backplate circuit board, to which they are electrically connected.

[0097] FIG. 25 illustrates a rear view of the backplate circuit board 2020, comprising a backplate processor/microcontroller 2502, such as a Texas Instruments MSP430F System-on-Chip Microcontroller that includes an on-board memory 2503. The backplate circuit board 2020 further comprises power supply circuitry 2504, which includes power-stealing circuitry, and switch circuitry 2506 for each HVAC respective HVAC function. For each such function the switch circuitry 2506 includes an isolation transformer 2508 and a back-to-back NFET package 2510. The use of FETs in the switching circuitry allows for “active power stealing”, *i.e.*, taking power during the HVAC “ON” cycle, by briefly diverting power from the HVAC relay circuit to the reservoir capacitors for a very small interval, such as 100 micro-seconds. This time is small enough not to trip the HVAC relay into the “off” state but is sufficient to charge up the reservoir capacitors. The use of FETs allows

for this fast switching time (100 micro-seconds), which would be difficult to achieve using relays (which stay on for tens of milliseconds). Also, such relays would readily degrade doing this kind of fast switching, and they would also make audible noise too. In contrast, the FETS operate with essentially no audible noise. Also provided is a combined temperature/humidity sensor module 2512, such as a Sensirion SHT21 module. The backplate microcontroller 2502 performs polling of the various sensors, sensing for mechanical wire insertion at installation, alerting the head unit regarding current vs. setpoint temperature conditions and actuating the switches accordingly, and other functions such as looking for appropriate signal on the inserted wire at installation.

[0098] In accordance with the teachings of the commonly assigned U.S. Ser. No. 13/269,501, supra, the commonly assigned U.S. Ser. No. 13/275,307, supra, and others of the commonly assigned incorporated applications, the thermostat 1800 represents an advanced, multi-sensing, microprocessor-controlled intelligent or "learning" thermostat that provides a rich combination of processing capabilities, intuitive and visually pleasing user interfaces, network connectivity, and energy-saving capabilities (including the presently described auto-away/auto-arrival algorithms) while at the same time not requiring a so-called "C-wire" from the HVAC system or line power from a household wall plug, even though such advanced functionalities can require a greater instantaneous power draw than a "power-stealing" option (i.e., extracting smaller amounts of electrical power from one or more HVAC call relays) can safely provide. By way of example, the head unit microprocessor 2402 can draw on the order of 250 mW when awake and processing, the LCD module 1960 can draw on the order of 250 mW when active. Moreover, the Wi-Fi module 2410 can draw 250 mW when active, and needs to be active on a consistent basis such as at a consistent 2% duty cycle in common scenarios. However, in order to avoid falsely tripping the HVAC relays for a large number of commercially used HVAC systems, power-stealing circuitry is often limited to power providing capacities on the order of 100 mW – 200 mW, which would not be enough to supply the needed power for many common scenarios.

[0099] The thermostat 1800 resolves such issues at least by virtue of the use of the rechargeable battery 1944 (or equivalently capable onboard power storage medium) that will recharge during time intervals in which the hardware power usage is less than what power stealing can safely provide, and that will discharge to provide the needed extra electrical power during time intervals in which the hardware power usage is greater than what power stealing can safely provide. In order to operate in a battery-conscious manner that promotes reduced power usage and extended service life of the rechargeable battery, the thermostat 1800 is provided with both (i) a relatively powerful and relatively power-intensive first processor (such as a Texas Instruments AM3703 microprocessor) that is capable of quickly performing more complex functions such as driving a visually pleasing user interface display and performing various mathematical learning computations, and (ii) a relatively less powerful and less power-intensive second processor (such as a Texas Instruments MSP430 microcontroller) for performing less intensive tasks, including driving and controlling the occupancy sensors. To conserve valuable power, the first processor is maintained in a "sleep" state for extended periods of time and is "woken up" only for occasions in which its capabilities are needed, whereas the second processor is kept on more or less continuously (although preferably slowing down or disabling certain internal clocks for brief periodic intervals to conserve power) to perform its relatively low-power tasks. The first and second processors are mutually configured such that the second processor can "wake" the first processor on the occurrence of certain events, which can be termed "wake-on" facilities. These wake-on facilities can be turned on and turned off as part of different functional and/or power-saving goals to be achieved. For example, a "wake-on-PROX" facility can be provided by which the second processor, when detecting a user's hand approaching the thermostat dial by virtue of an active proximity sensor (PROX, such as provided by a Silicon Labs SI1142 Proximity/Ambient Light Sensor with I2C Interface), will "wake up" the first processor so that it can provide a visual display to the approaching user and be ready to respond more rapidly when their hand touches the dial. As another

example, a "wake-on-PIR" facility can be provided by which the second processor will wake up the first processor when detecting motion somewhere in the general vicinity of the thermostat by virtue of a passive infrared motion sensor (PIR, such as provided by a PerkinElmer DigiPyro PYD 1998 dual element pyrodetector). Notably, wake-on-PIR is not synonymous with auto-arrival, as there would need to be N consecutive buckets of sensed PIR activity to invoke auto-arrival, whereas only a single sufficient motion event can trigger a wake-on-PIR wake-up.

[00100] FIGS. 26A-26C illustrate conceptual examples of the sleep-wake timing dynamic, at progressively larger time scales, that can be achieved between the head unit (HU) microprocessor and the backplate (BP) microcontroller that advantageously provides a good balance between performance, responsiveness, intelligence, and power usage. The higher plot value for each represents a "wake" state (or an equivalent higher power state) and the lower plot value for each represents a "sleep" state (or an equivalent lower power state). As illustrated, the backplate microcontroller is active much more often for polling the sensors and similar relatively low-power tasks, whereas the head unit microprocessor stays asleep much more often, being woken up for "important" occasions such as user interfacing, network communication, and learning algorithm computation, and so forth. A variety of different strategies for optimizing sleep versus wake scenarios can be achieved by the disclosed architecture and is within the scope of the present teachings. For example, the commonly assigned U.S. Ser. No. 13/275,307, *supra*, describes a strategy for conserving head unit microprocessor "wake" time while still maintaining effective and timely communications with a cloud-based thermostat management server via the thermostat's Wi-Fi facility.

[00101] FIG. 27 illustrates a self-descriptive overview of the functional software, firmware, and/or programming architecture of the head unit microprocessor 2402 for achieving its described functionalities. FIG. 28 illustrates a self-descriptive overview of the functional software, firmware, and/or programming architecture of the backplate microcontroller 2502 for achieving its described functionalities.

[00102] FIG. 29 illustrates a view of the wiring terminals as presented to the user when the backplate is exposed. As described in the commonly assigned U.S. Ser. No. 13/034,666, *supra*, each wiring terminal is configured such that the insertion of a wire thereinto is detected and made apparent to the backplate microcontroller and ultimately the head unit microprocessor. According to a preferred embodiment, if the insertion of a particular wire is detected, a further check is automatically carried out by the thermostat to ensure that signals appropriate to that particular wire are present. For one preferred embodiment, there is automatically measured a voltage waveform between that wiring node and a "local ground" of the thermostat. The measured waveform should have an RMS-type voltage metric that is above a predetermined threshold value, and if such predetermined value is not reached, then a wiring error condition is indicated to the user. The predetermined threshold value, which may vary from circuit design to circuit design depending on the particular selection of the local ground, can be empirically determined using data from a population of typical HVAC systems to statistically determine a suitable threshold value. For some embodiments, the "local ground" or "system ground" can be created from (i) the R_h line and/or R_c terminal, and (ii) whichever of the G, Y, or W terminals from which power stealing is being performed, these two lines going into a full-bridge rectifier (FWR) which has the local ground as one of its outputs.

[00103] While examples and implementations have been described, they should not serve to limit any aspect of the present invention. Accordingly, various modifications may be made without departing from the spirit and scope of the invention. Indeed, while the occupancy sensor positioned behind the grille member is characterized in one or more embodiments supra as being a PIR sensor, for which the above-described configurations are particularly advantageous, the scope of the present teachings is not so limited. Moreover, it is to be appreciated that while the grille member is characterized in one or more embodiments supra as being generally forward-facing, which is useful for more common scenarios in which the thermostat is mounted on a wall at a moderate height above the floor

that makes it easy to reach, the scope of the present teachings is not so limited. By way of example, there is provided in some further embodiments a thermostat, comprising a housing including a region of interest-facing surface (ROI-facing surface), where the ROI corresponds to the relevant area or volume of the house (or other enclosure) for which occupancy or occupancy-related events are to be sensed. The thermostat further includes an occupancy sensor disposed inside the housing and used to sense occupancy in the ROI, the occupancy sensor having at least one receiving surface and being able to detect the presence and/or movement of the occupant in the ROI. The thermostat further includes a grille member having one or more openings and included along the ROI-facing surface of the housing and placed over the one or more receiving surfaces of the occupancy sensor that substantially conceals and protects the occupancy sensor disposed inside the housing, whereby the concealment of the occupancy sensor by the grille member promotes a visually pleasing quality of the thermostat yet permits the occupancy sensor to effectively detect the presence and/or movement of the occupant in the ROI. The ROI-facing surface can be a forward-facing surface for a conventional wall-mounted location, or can be a downward-facing surface (including a diagonally-outward downward angle) for a mounting location that is above a doorway, for example, such that persons going in and out of the room are sensed. The occupancy sensor can include, for example, one or more of a PIR sensor, an actively transmitting proximity sensor, an ambient light sensor, and an ultrasound sensor. In the case of a PIR sensor and a mounting location over the doorway, the slotted openings in the grille member can be oriented in a direction normal to the door opening, such that movement toward and away from the door is more optimally sensed. It is to be further appreciated that the term thermostat, as used hereinabove and hereinbelow, can include thermostats having direct control wires to an HVAC system, and can further include thermostats that do not connect directly with the HVAC system, but that sense an ambient temperature at one location in an enclosure and cooperatively communicate by wired or wireless data connections with a separate thermostat unit located elsewhere in the enclosure,

wherein the separate thermostat unit does have direct control wires to the HVAC system. Accordingly, the invention is not limited to the above-described implementations, but instead is defined by the appended claims in light of their full scope of equivalents.

5

CLAIMS

What is claimed is:

1. A thermostat, comprising:

a housing including a forward-facing surface;

a passive infrared (PIR) motion sensor disposed inside the housing and used to sense occupancy in the vicinity of the thermostat, the PIR motion sensor having a radiation receiving surface and being able to detect the lateral movement of an occupant in front of said forward-facing surface of said housing; and

a grille member having one or more openings and included along the forward-facing surface of the housing and placed over the radiation receiving surface of the PIR motion sensor that substantially conceals and protects the PIR motion sensor disposed inside the housing, whereby the concealment of the PIR motion sensor by the grille member promotes a visually pleasing quality of the thermostat yet permits the PIR motion sensor to effectively detect the lateral movement of the occupant.

2. The thermostat of Claim 1, wherein said grille member openings are slit-like openings oriented along a substantially horizontal direction, said substantially horizontal direction corresponding to the lateral movement of the occupant.

3. The thermostat of Claim 1, wherein the grille member is comprised of one or more materials selected from a set of materials including: metal, plastic, glass, carbon-composite, and metallic alloy.

4. The thermostat of Claim 1 further comprising one or more temperature sensors disposed inside the housing with at least one temperature sensor thermally coupled to the grille member.

5. The thermostat of Claim 4 wherein the grille member facilitates the at least one temperature sensor's ability to measure an ambient temperature of air outside of the housing.

6. The thermostat of Claim 4 wherein the grille member is comprised of a material having high thermal conductivity.

7. The thermostat of claim 3, wherein the at least one temperature sensor is thermally coupled to the grille using a thermally conductive paste applied to the at least one temperature sensor and an inward facing surface of the grille member.

8. The thermostat of claim 1, wherein the grille member incorporated in the forward-facing surface of the housing may be used control the PIR motion sensor's sensitivity to the height of occupants by varying a vertical span of one or more openings on the grille member that pass the emitted radiation to the receiving surface of the PIR motion sensor.

9. The thermostat of claim 8 wherein the grille member incorporated in the forward-facing surface of the housing may be used control the PIR motion sensor's sensitivity to the height of occupants by changing a number of rows of the plurality of substantially horizontal slit-like openings that pass infrared radiation to the receiving surface of the PIR motion sensor.

10. The thermostat of claim 1, wherein the grille member incorporated in the forward-facing surface of the housing further comprises a mask member attached to a back portion of the grille member, wherein the sensitivity to the height of

occupants may be varied depending on the coverage by the mask member of the plurality of substantially horizontal slit-like openings used to pass the emitted radiation to the receiving surface of the PIR motion sensor.

11. A method of integrating occupancy sensing capabilities in a thermostat, comprising:

providing a housing for the thermostat including a forward-facing surface;

providing a passive infrared (PIR) motion sensor disposed inside the housing and used to sense occupancy in the vicinity of the thermostat, the PIR motion sensor having a radiation receiving surface and being able to detect the lateral movement of an occupant in front of said forward-facing surface of the housing; and

attaching a grille member along the forward-facing surface of the housing and placed over the radiation receiving surface of the PIR motion sensor, wherein the grille member substantially conceals and protects the PIR motion sensor disposed inside the housing promoting a visually pleasing quality of said thermostat, whereby one or more slit-like openings in the grille-member enables the PIR motion sensor to detect lateral movement of an occupant in front of said forward-facing surface of the housing of the thermostat.

12. The method of Claim 11, wherein said grille member is comprised of one or more materials selected from a set of materials including: metal, plastic, glass, carbon-composite, metallic-carbon composite and metallic alloy.

13. The method of Claim 11 further comprising one or more temperature sensors disposed inside the housing with at least one temperature sensor thermally coupled to said grille member.

14. The method of Claim 13 wherein said grille member facilitates the at least one temperature sensor's ability to measure an ambient temperature of air measured outside of the housing rather than inside of the housing.

15. The method of Claim 12 wherein the grille member is comprised of a material having high thermal conductivity.

16. The thermostat of claim 13, wherein said at least one temperature sensor is in contact with an inward facing surface of said grille member by a thermally conductive paste.

17. The method of claim 11, wherein the grille member incorporated in the forward-facing surface of the housing may be used control the PIR motion sensor's sensitivity to the height of occupants by varying a number of rows of a plurality of substantially horizontal slit-like openings that pass infrared radiation to the receiving surface of the PIR motion sensor.

18. The method of claim 11, wherein the grille member incorporated in the forward-facing surface of the housing further comprises a mask member attached to a backside portion of the grille member, wherein the sensitivity to the height of occupants may be varied depending on the coverage by the mask member of a plurality of substantially horizontal slit-like openings used to pass infrared radiation to the receiving surface of the PIR motion sensor.

19. The method of Claim 18, wherein said grille member is comprised of one or more materials selected from a set of materials including: metal, plastic, glass, carbon-composite, metallic-carbon composite and metallic alloy.

20. A thermostat, comprising:

a housing for said thermostat including a forward-facing surface;

a passive infrared (PIR) motion sensor coplanar with the forward-facing surface of the housing and used to sense occupancy in the vicinity of the thermostat, the PIR motion sensor having Fresnel lens on a surface of the PIR motion sensor that directs infrared radiation towards infrared sensitive sensor elements below the surface of the PIR motion sensor, wherein the infrared sensitive sensor elements detect the infrared radiation emitted towards said forward-facing surface by the lateral movement of an occupant in front of said forward-facing surface of said housing;

a temperature sensor disposed inside the housing and further including an upper thermal sensor and a lower thermal sensor positioned along a plane substantially normal and adjacent to the PIR motion sensor, wherein the upper thermal sensor tends to collect temperature data associated with an area outside the thermostat and the lower thermal sensor tends to collect temperature data associated with an interior of the housing for the thermostat and the temperature data from the lower thermal sensor is taken into consideration in view of the temperature data from the upper thermal sensor in determining an ambient temperature; and

a grille member placed along the forward-facing surface of the housing and over the surface of the PIR motion sensor, wherein the grille member has a plurality of slit-like openings that enable the PIR motion sensor to detect infrared radiation emitted by the lateral movement of the occupant, wherein the grille member is comprised of a thermally conductive material and also placed in close proximity to the temperature sensor and acts as a thermal antenna to at least one thermal sensor associated with the temperature sensor thereby enhancing the ability of the temperature sensor to gather temperature data outside of the housing and detect an ambient temperature of an environment.

21. The thermostat of Claim 20, wherein the plurality of slit-like openings of said grille member are positioned along a substantially horizontal direction that

facilitates the ability of the PIR motion sensor to detect the lateral movement of an occupant in front of the forward-facing surface of the housing.

22. The thermostat of Claim 20, wherein the grille member is comprised of one or more materials selected from a set of materials including: metal, plastic, glass, carbon-composite, and metallic alloy.

23. The thermostat of Claim 20 wherein at least one of the plurality of temperature sensors disposed inside the housing are thermally coupled to the grille member.

24. The thermostat of claim 23, wherein at least one of the plurality of temperature sensors is thermally coupled to the grille using a thermally conductive paste applied to the at least one thermal sensor associated with the temperature sensor along an inward facing surface of the grille member.

25. The thermostat of claim 20, wherein the grille member incorporated in the forward-facing surface of the housing may be used control the PIR motion sensor's sensitivity to the height of occupants by varying a vertical span of one or more openings on the grille member that pass the emitted radiation to the receiving surface of the PIR motion sensor.

26. The thermostat of claim 20 wherein the grille member incorporated in the forward-facing surface of the housing may be used control the PIR motion sensor's sensitivity to the height of occupants by changing a number of rows of the plurality of substantially horizontal slit-like openings that pass the emitted radiation to the receiving surface of the PIR motion sensor.

27. The thermostat of claim 20, wherein the grille member incorporated in the forward-facing surface of the housing further comprises a mask member attached

to a back portion of the grille member, wherein the sensitivity to the height of occupants may be varied depending on a coverage by the mask member of the plurality of substantially horizontal slit-like openings used to pass the emitted radiation to the receiving surface of the PIR motion sensor.

5

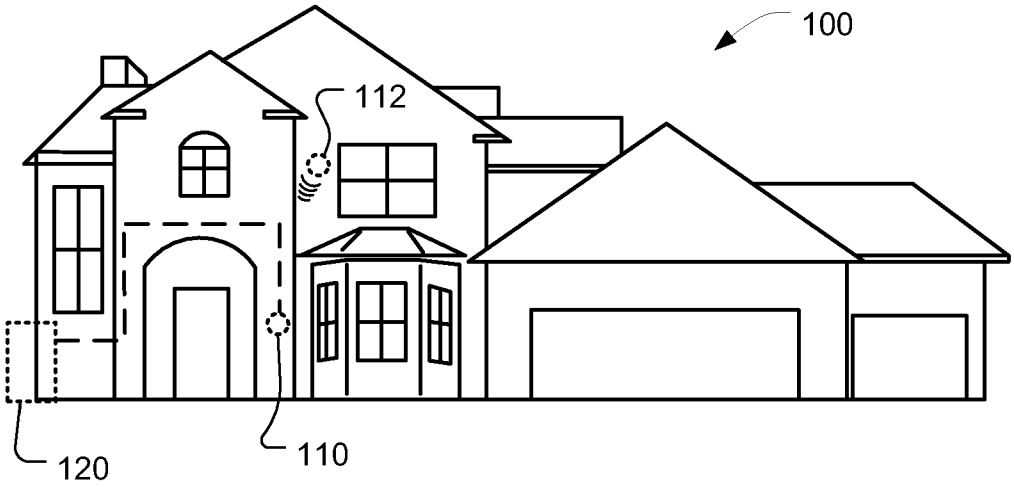
100
112
120
110

FIG. 1

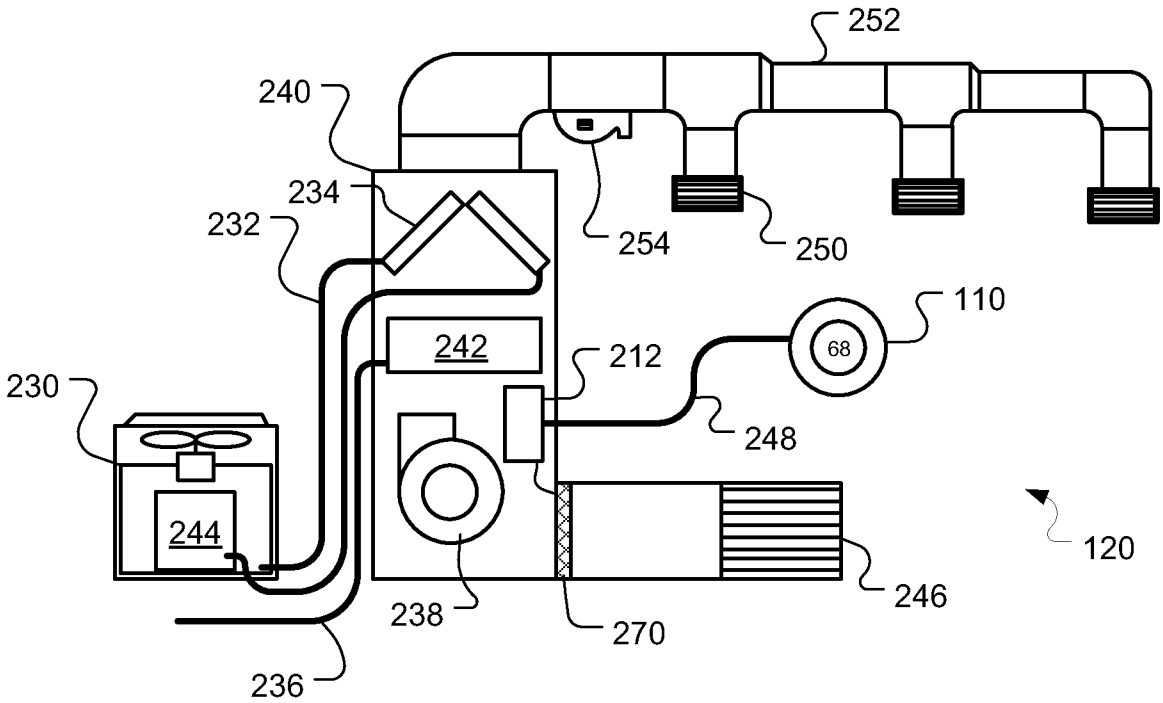
252
240
234
232
254
250
110
68
242
212
230
248
244
120
246
238
270
236

FIG. 2

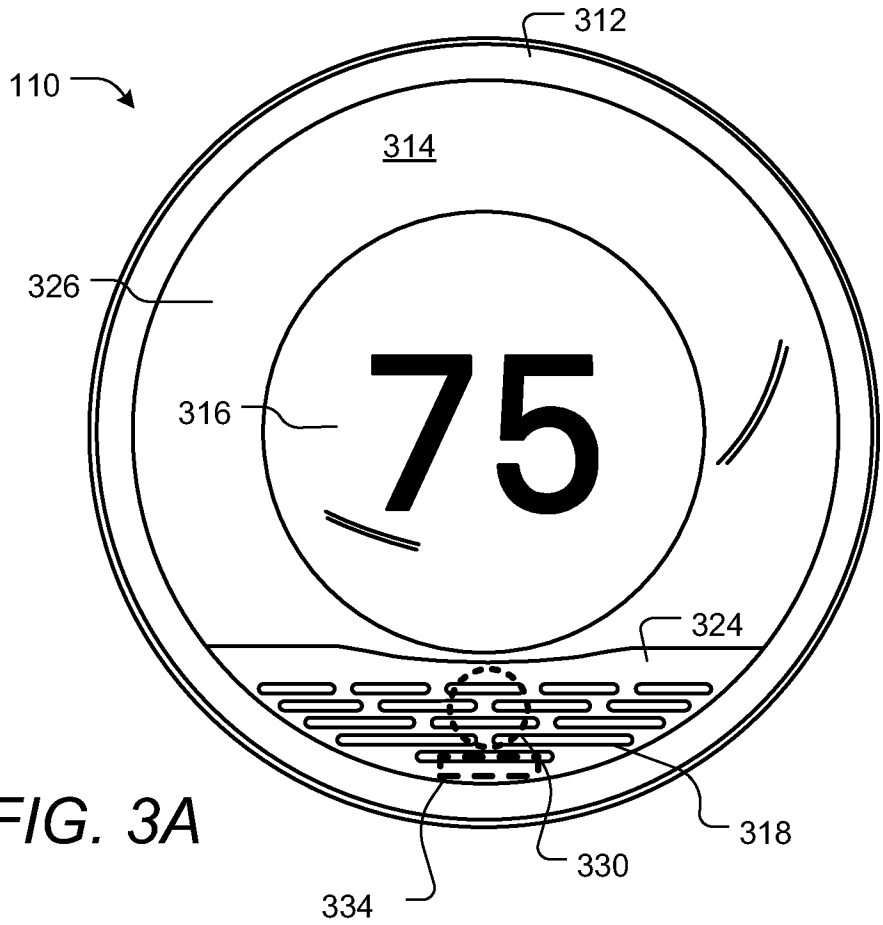
312
110
314
326
75
316
324
318
330
334

FIG. 3A

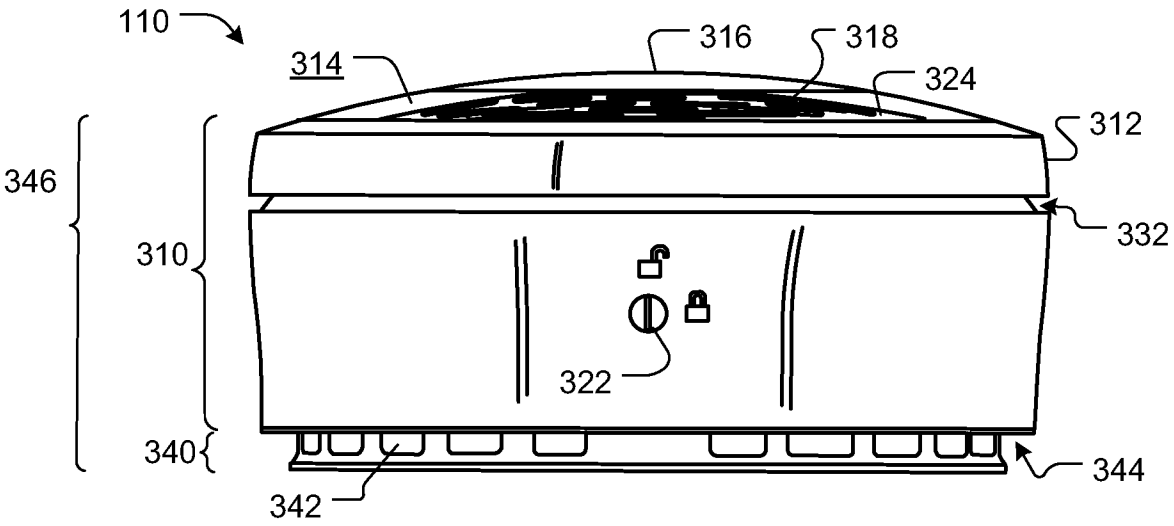
110
316
318
314
324
312
346
332
310
322
340
344
342

FIG. 3B

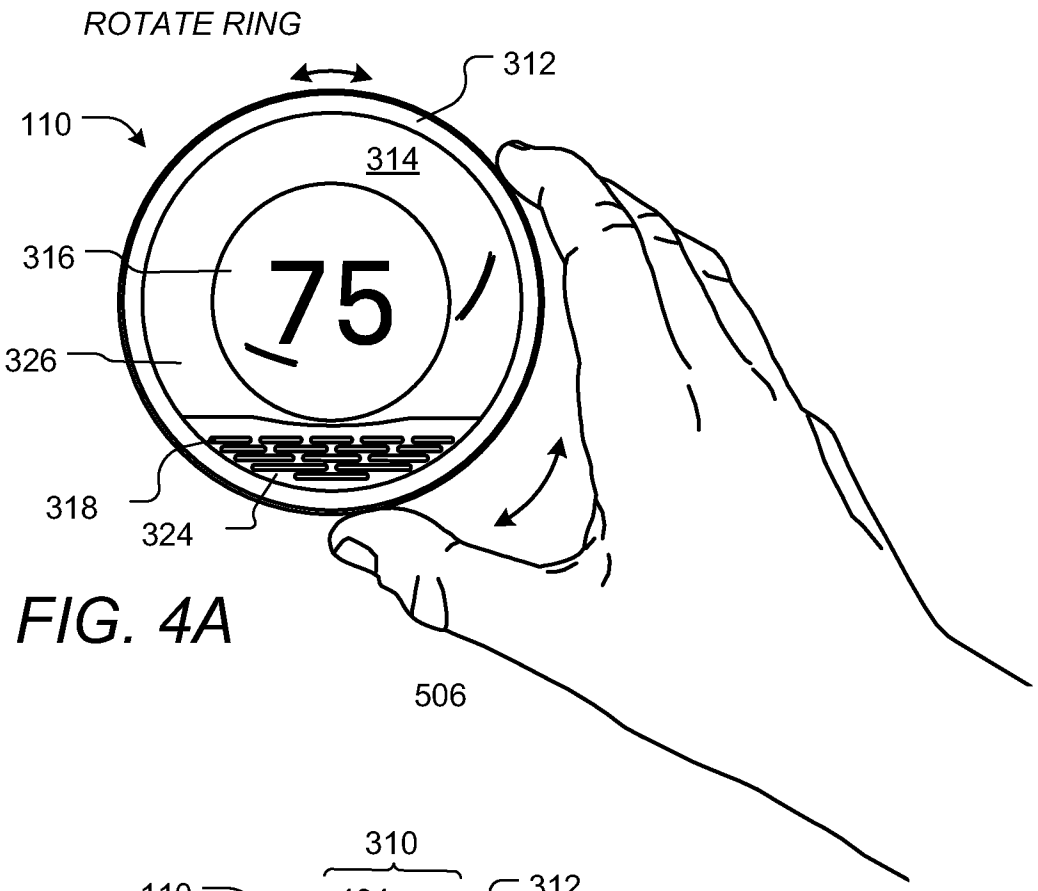
ROTATE RING
312
110
314
316
75
326
318
324
506

FIG. 4A

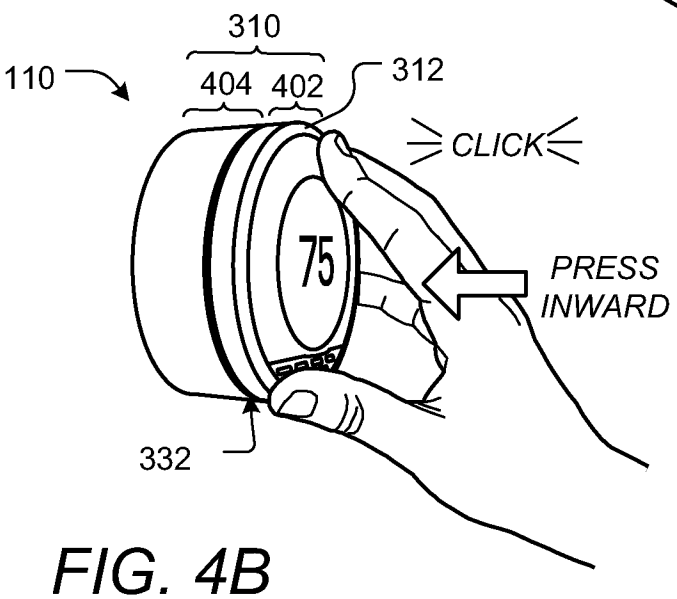
310
110
404
402
312
CLICK
75
PRESS
INWARD
332

FIG. 4B

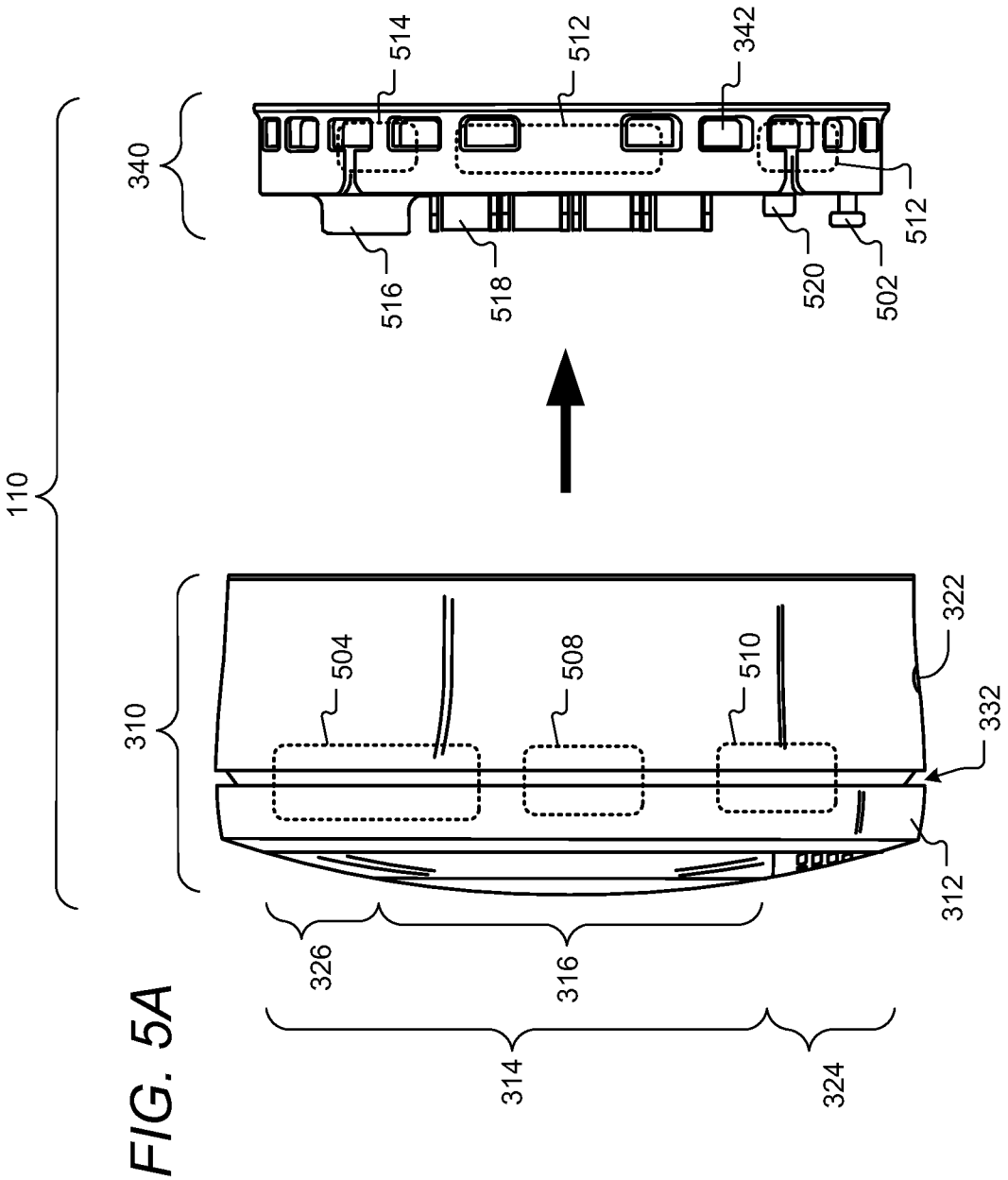
110
340
514
512
342
516
518
520
502
512
310
504
508
510
322
332
312
326
316
314
324

FIG. 5A

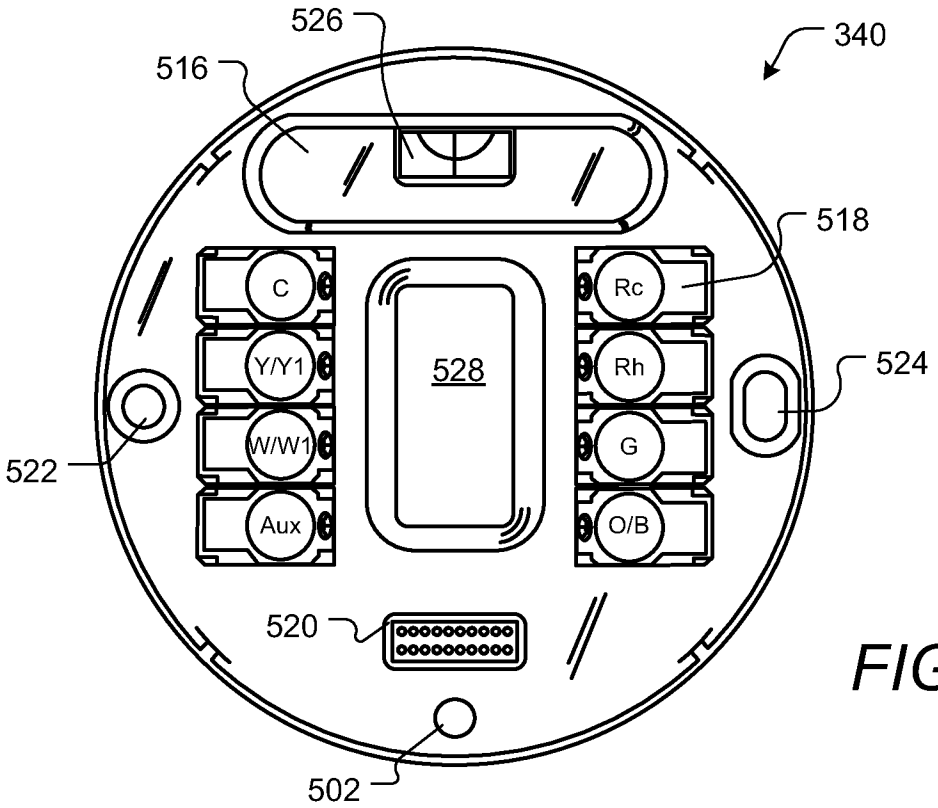
526
516
340
518
C
Y/Y1
W/W1
Aux
528
Rc
Rh
G
O/B
524
522
520
502

FIG. 5B

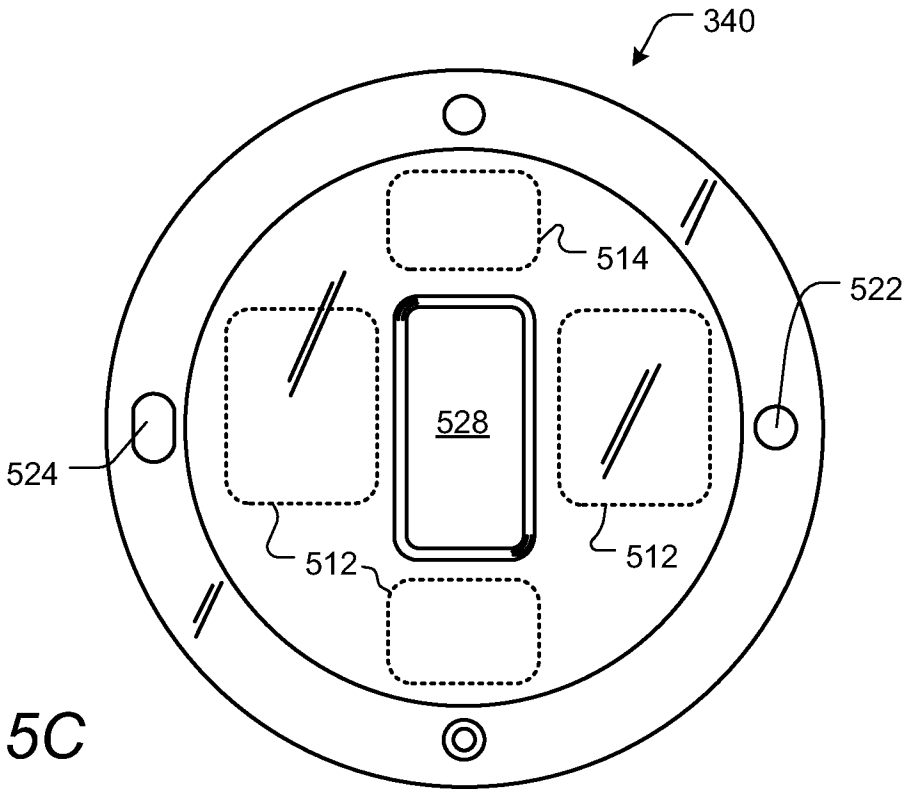
340
514
522
528
524
512
512

FIG. 5C

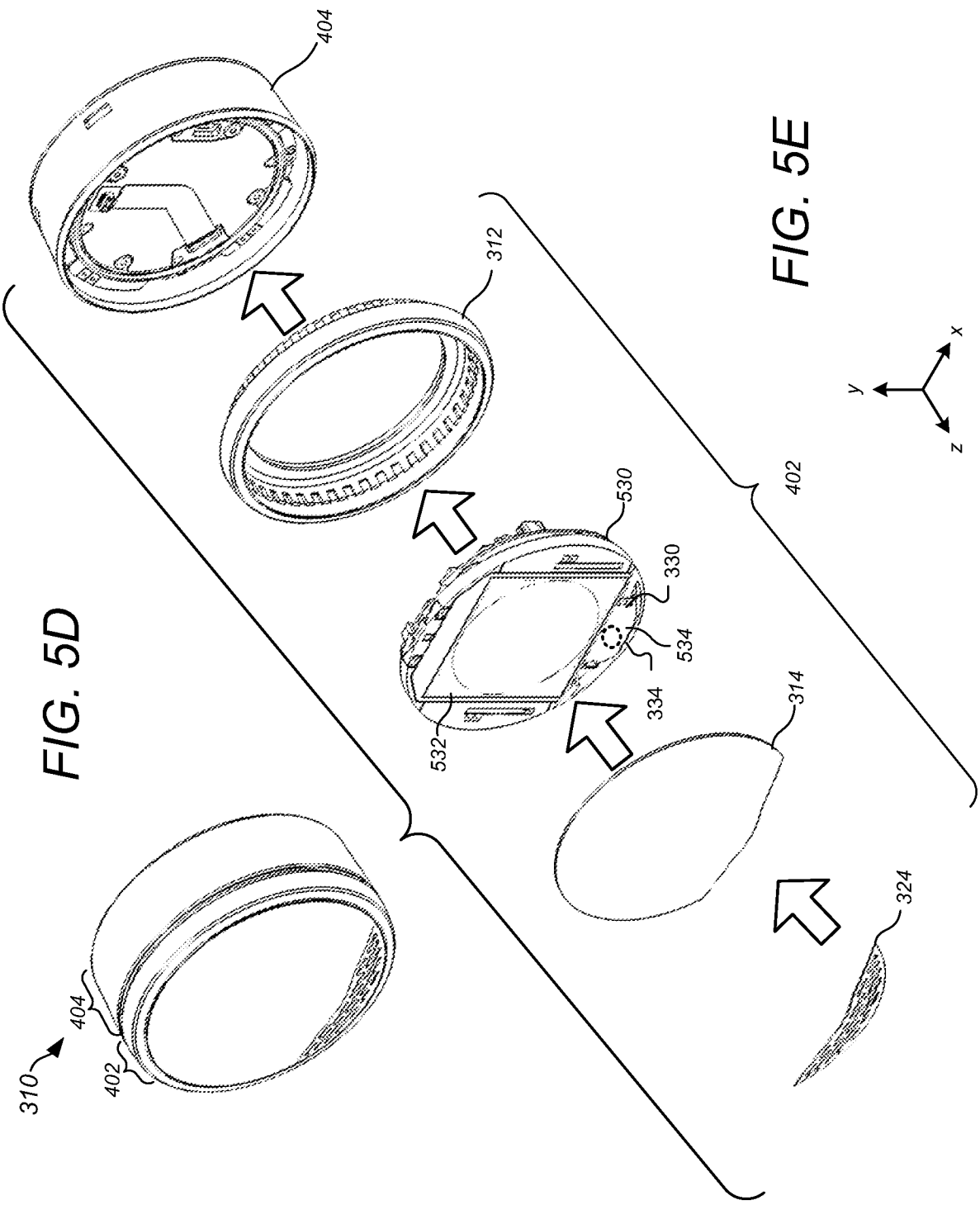

FIG. 5D

FIG. 5E

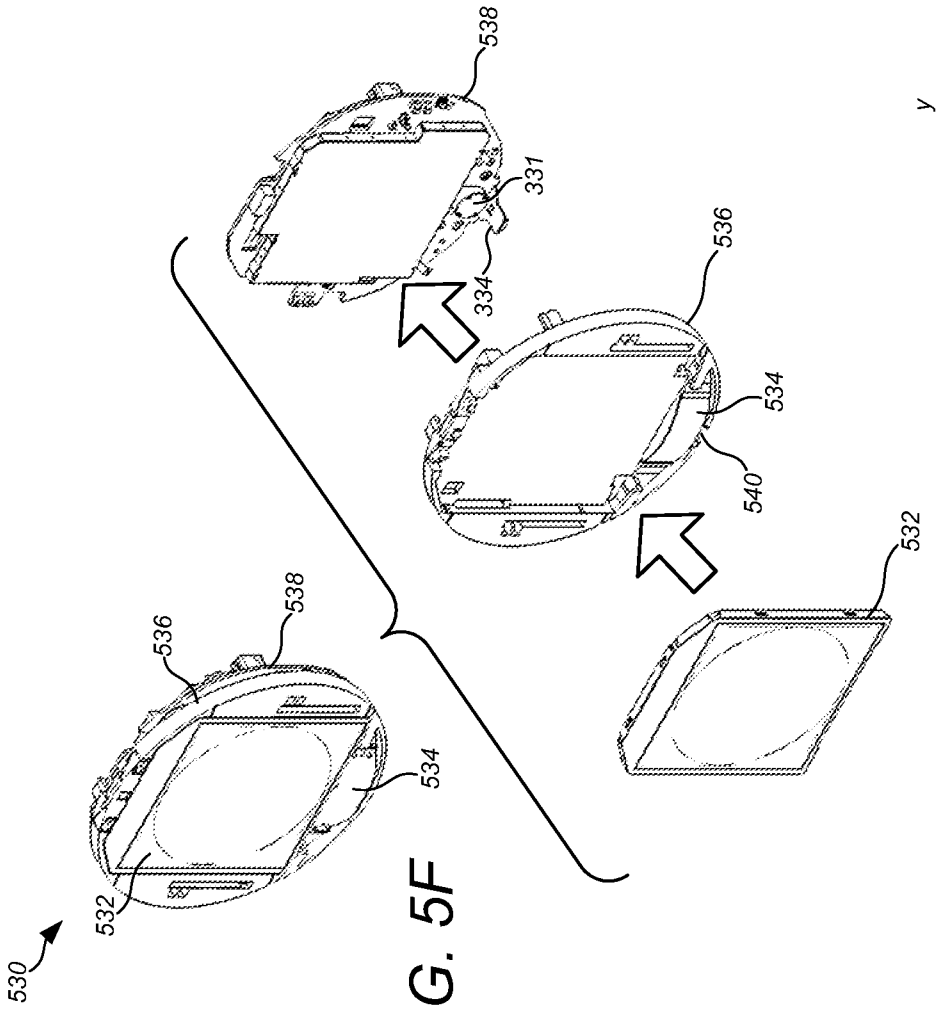

FIG. 5F

FIG. 5G

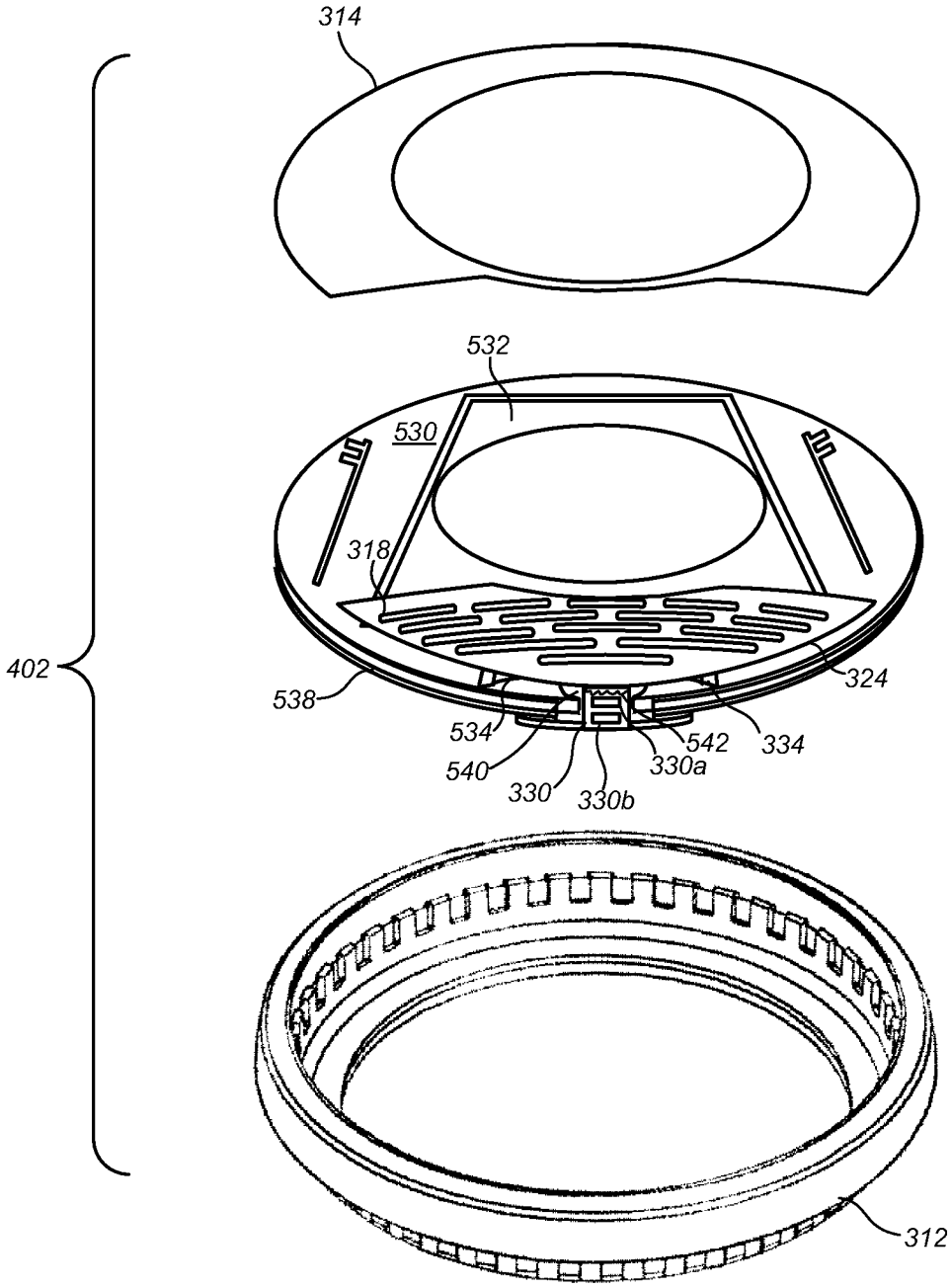

FIG. 6

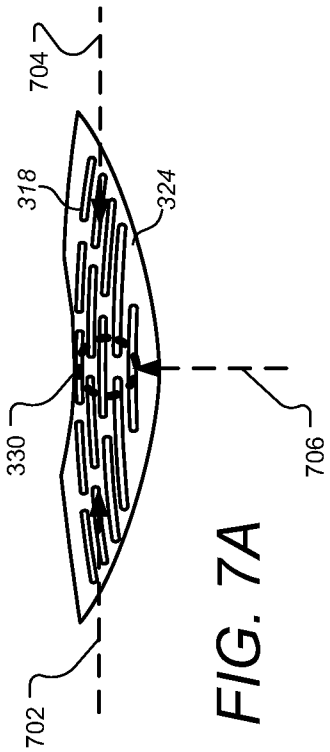

FIG. 7A

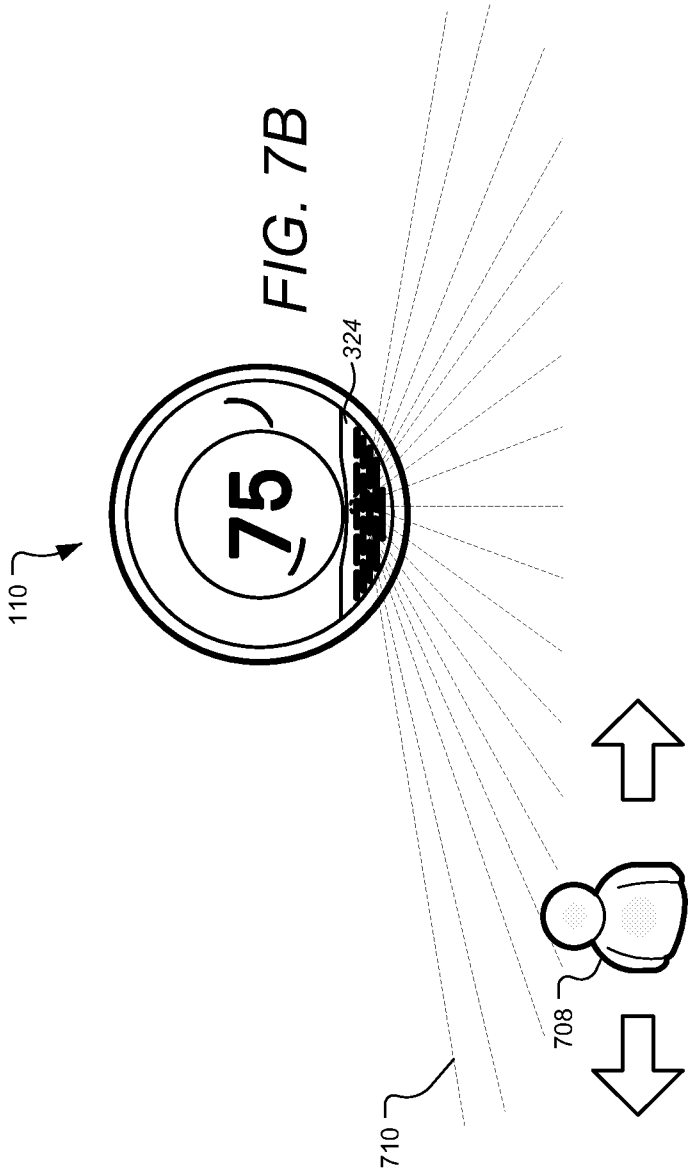

FIG. 7B

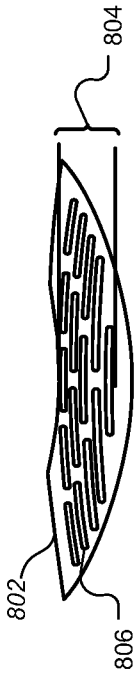

FIG. 8A

FIG. 8B

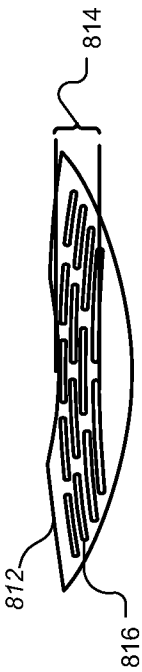

FIG. 8C

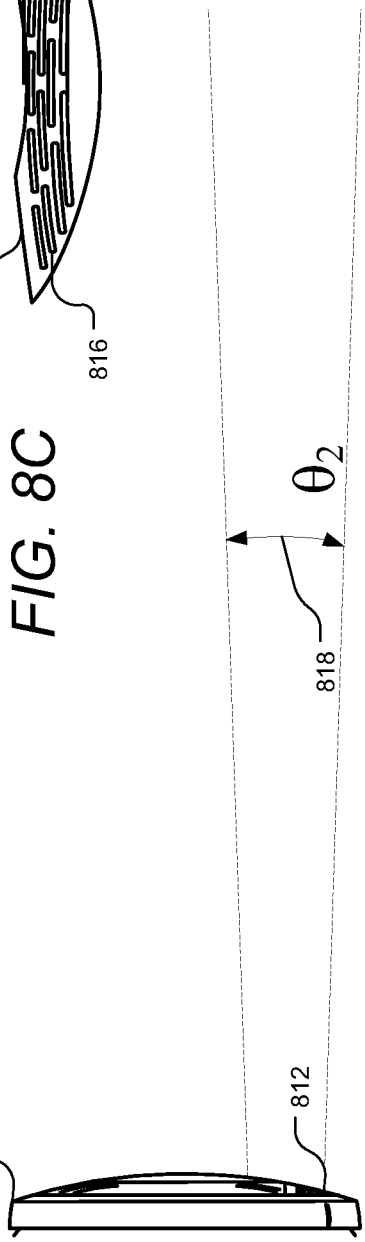

FIG. 8D

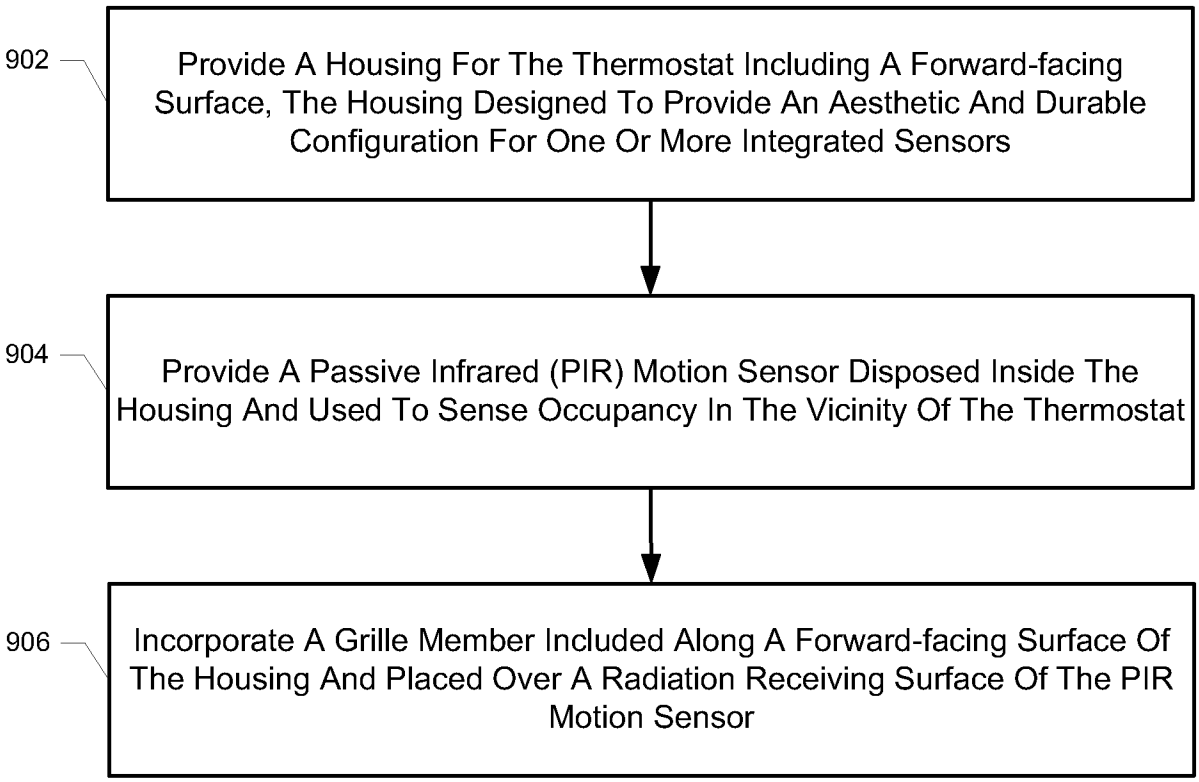

FIG. 9

FIG. 10
FIG. 11
FIG. 12
FIG. 13
FIG. 14
FIG. 15
FIG. 16
FIG. 17

(omitted)

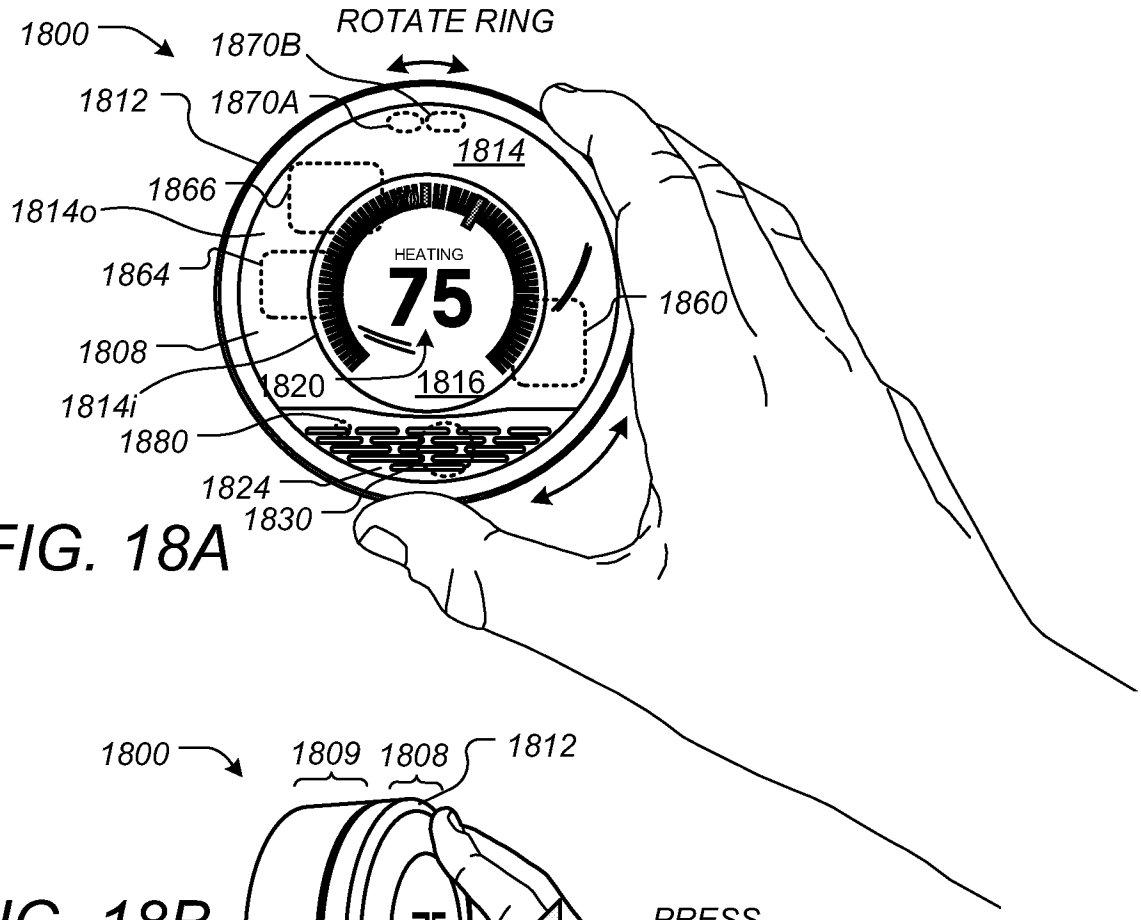

FIG. 18A

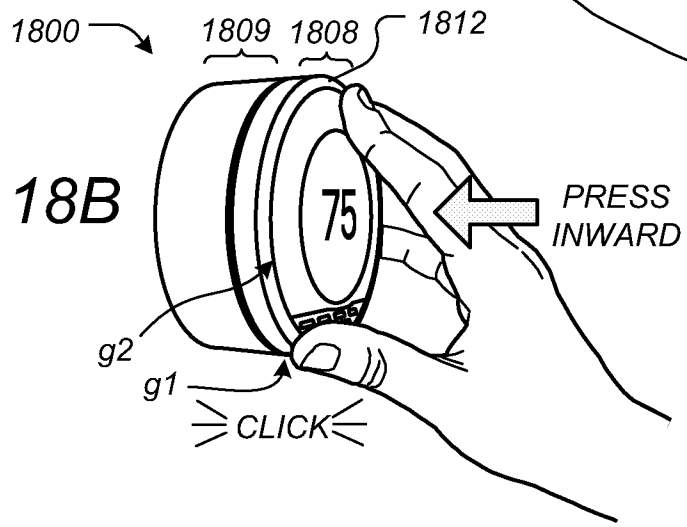

FIG. 18B

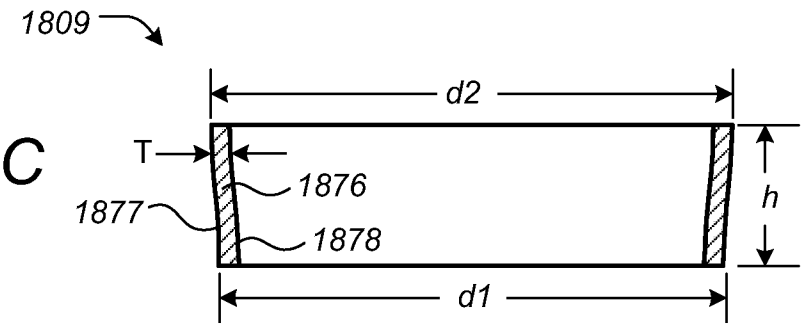

FIG. 18C

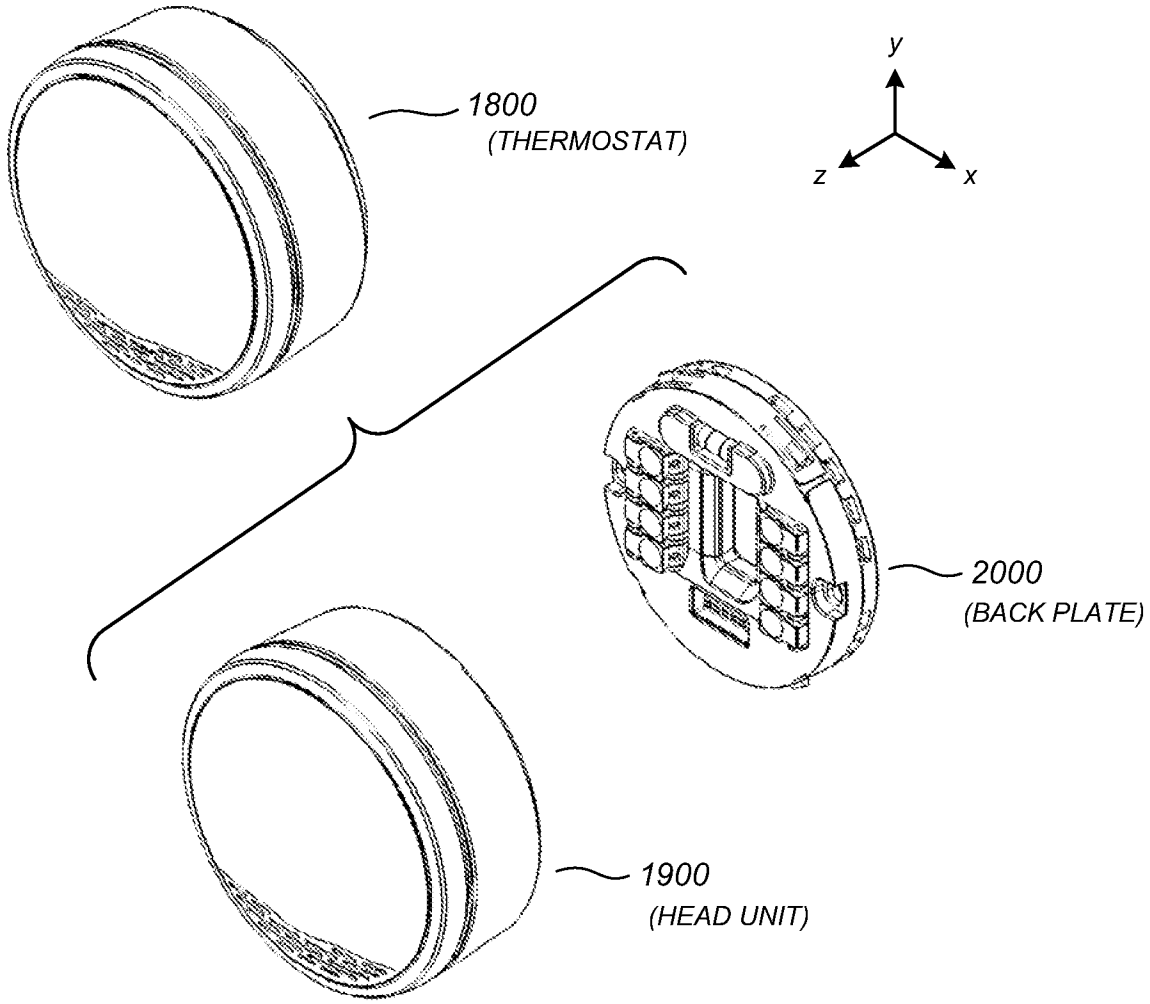

FIG. 19A

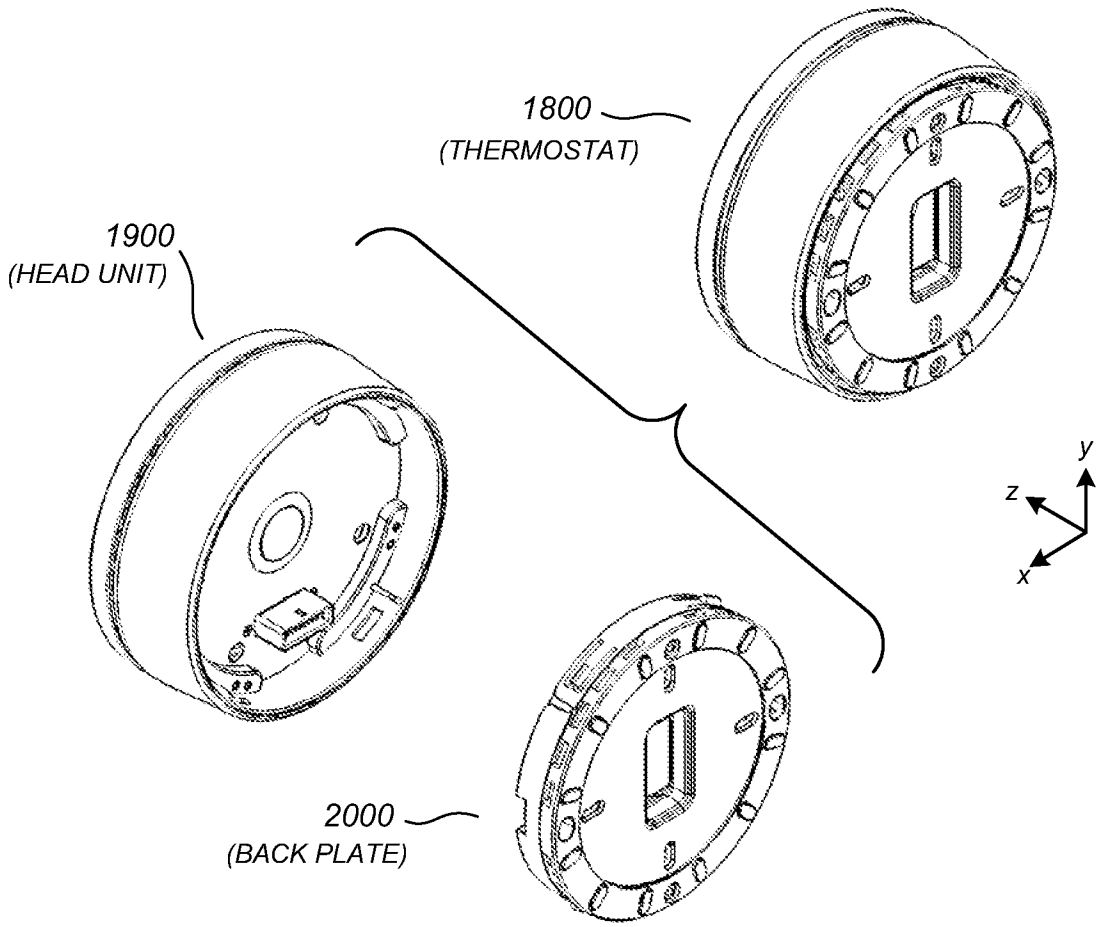

FIG. 19B

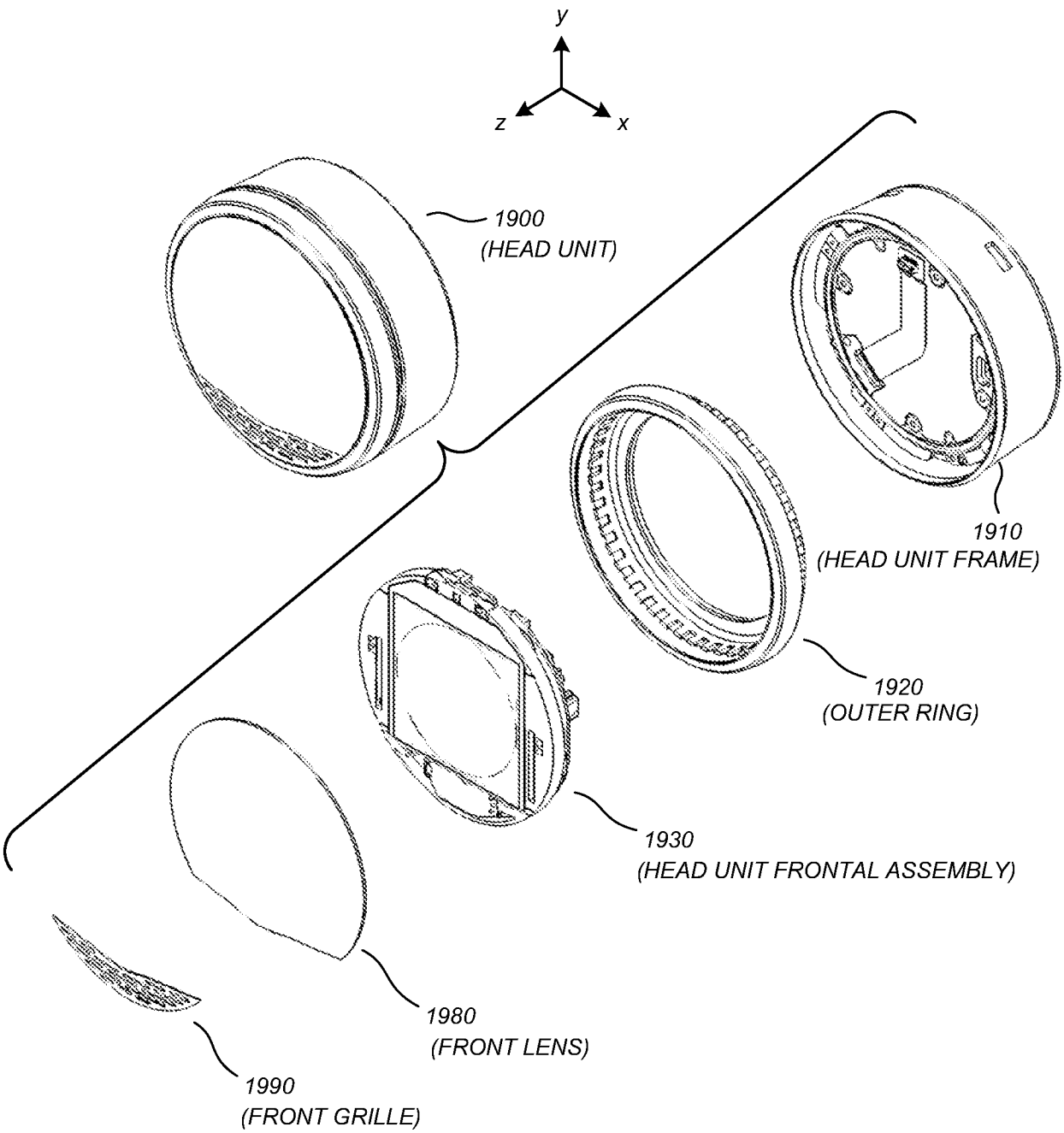
y
z
x
1900
(HEAD UNIT)
1910
(HEAD UNIT FRAME)
1920
(OUTER RING)
1930
(HEAD UNIT FRONTAL ASSEMBLY)
1980
(FRONT LENS)
1990
(FRONT GRILLE)

FIG. 20A

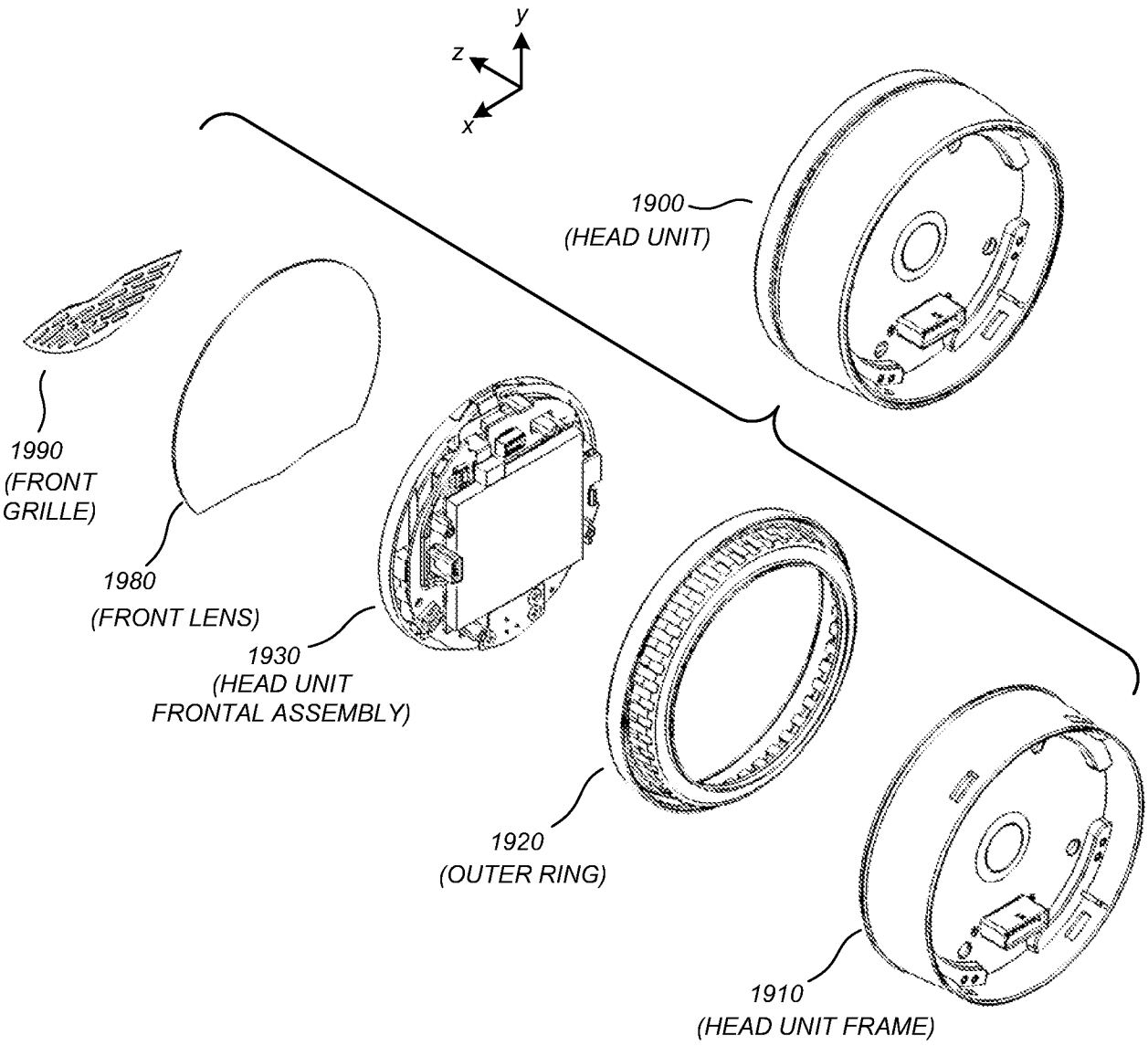
y
z
x
1900
(HEAD UNIT)
1990
(FRONT
GRILLE)
1980
(FRONT LENS)
1930
(HEAD UNIT
FRONTAL ASSEMBLY)
1920
(OUTER RING)
1910
(HEAD UNIT FRAME)

FIG. 20B

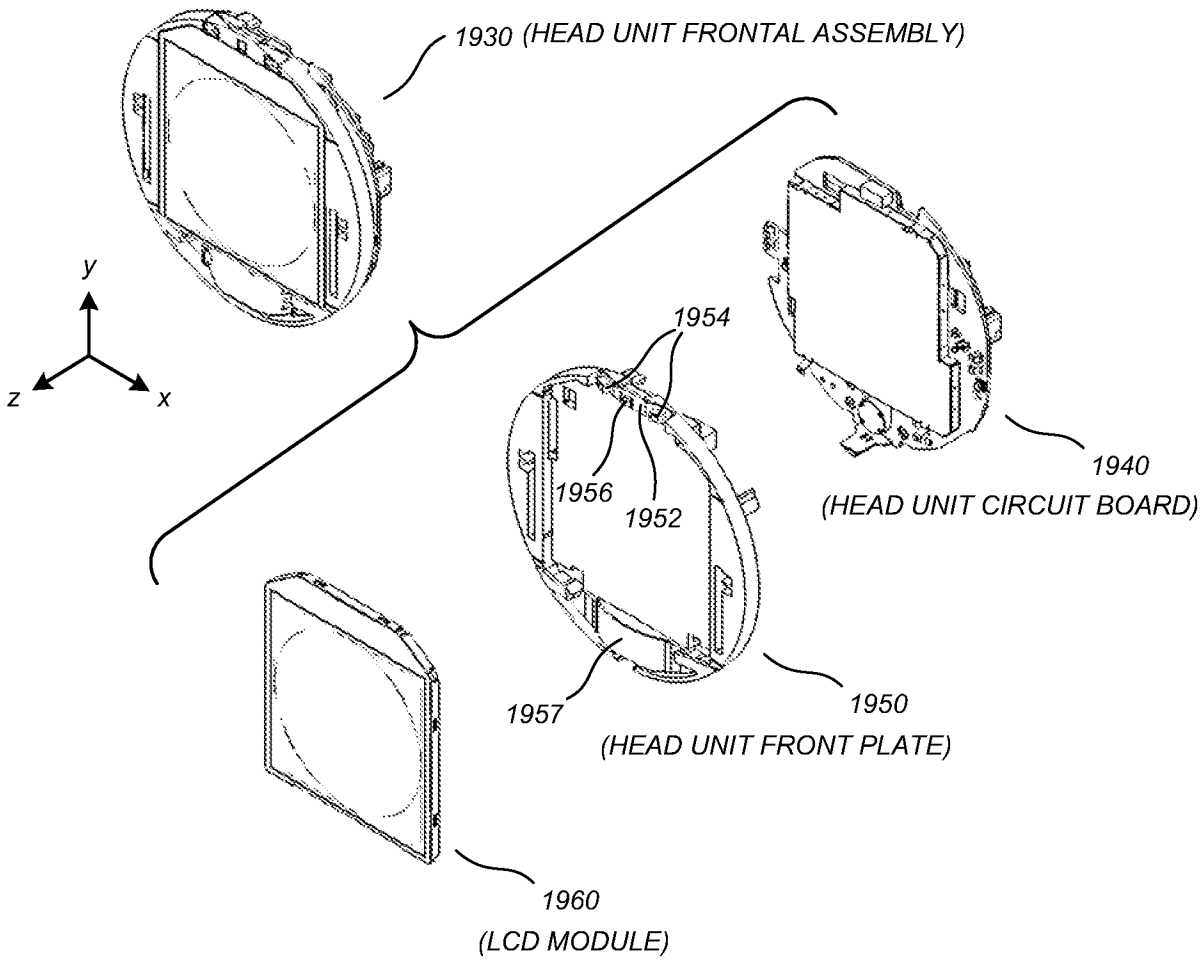
1930 (HEAD UNIT FRONTAL ASSEMBLY)
y
z
x
1954
1956
1952
1940
(HEAD UNIT CIRCUIT BOARD)
1957
1950
(HEAD UNIT FRONT PLATE)
1960
(LCD MODULE)

FIG. 21A

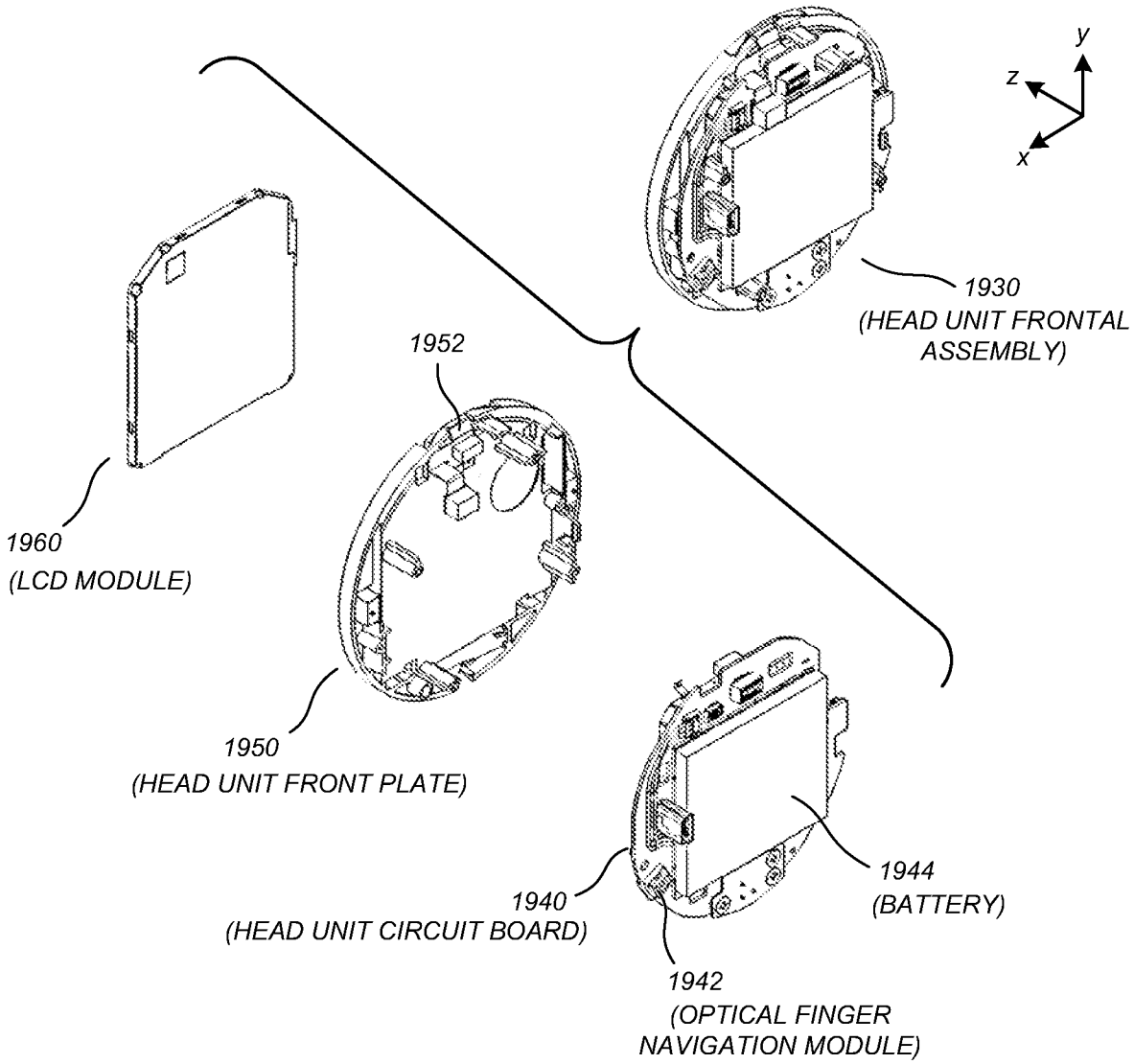
y
z
x
1930
(HEAD UNIT FRONTAL ASSEMBLY)
1952
1960
(LCD MODULE)
1950
(HEAD UNIT FRONT PLATE)
1940
(HEAD UNIT CIRCUIT BOARD)
1944
(BATTERY)
1942
(OPTICAL FINGER NAVIGATION MODULE)

FIG. 21B

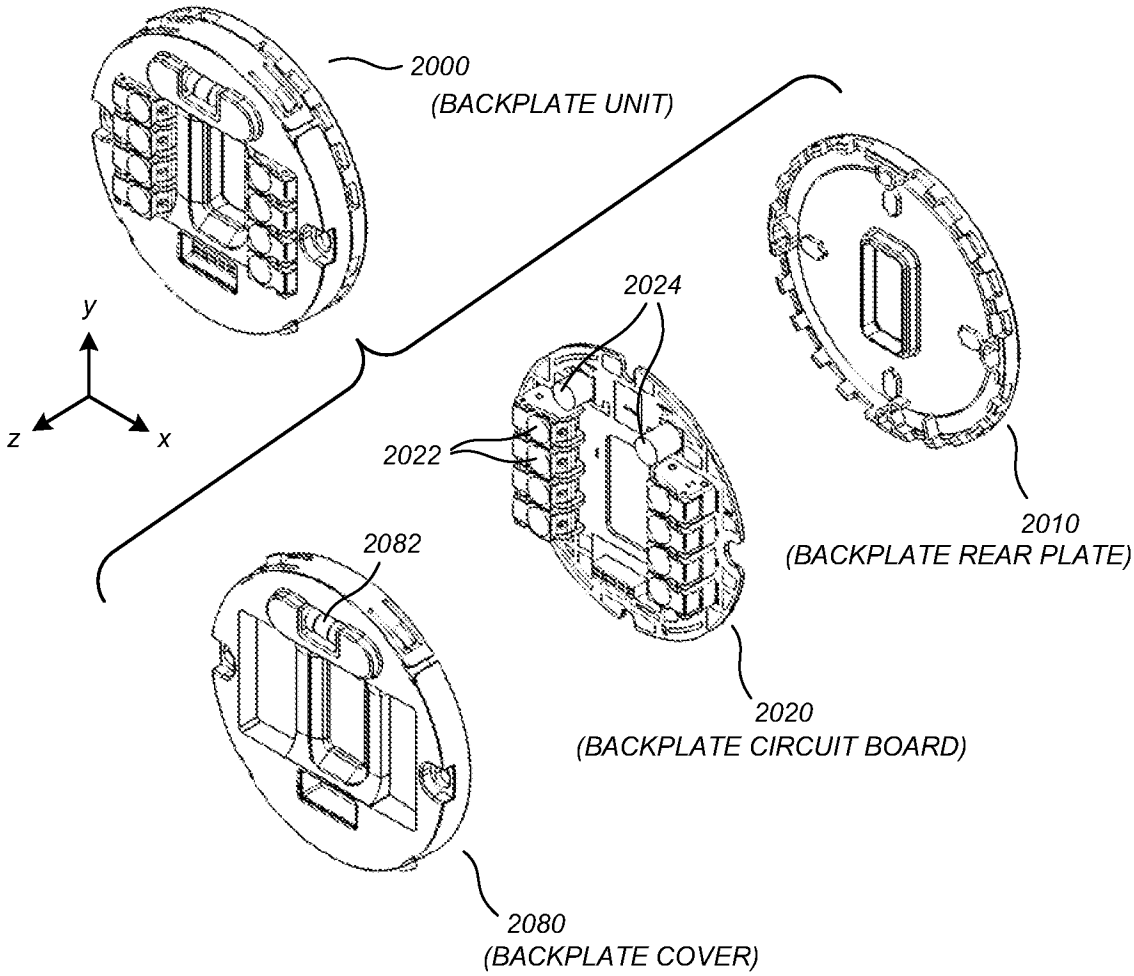
2000
(BACKPLATE UNIT)
y
z
x
2024
2022
2010
(BACKPLATE REAR PLATE)
2082
2020
(BACKPLATE CIRCUIT BOARD)
2080
(BACKPLATE COVER)

FIG. 22A

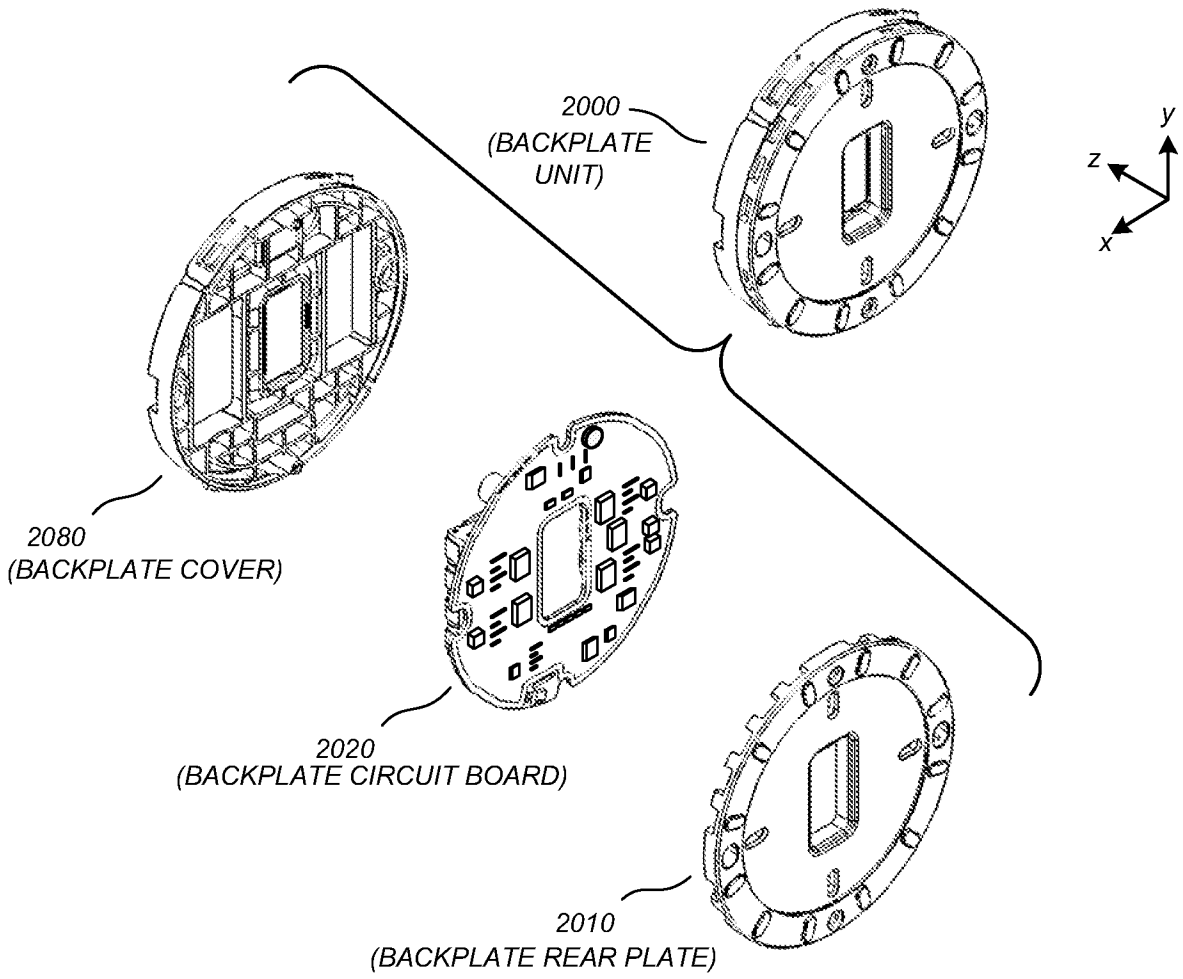
2000
(BACKPLATE UNIT)
y
z
x
2080
(BACKPLATE COVER)
2020
(BACKPLATE CIRCUIT BOARD)
2010
(BACKPLATE REAR PLATE)

FIG. 22B

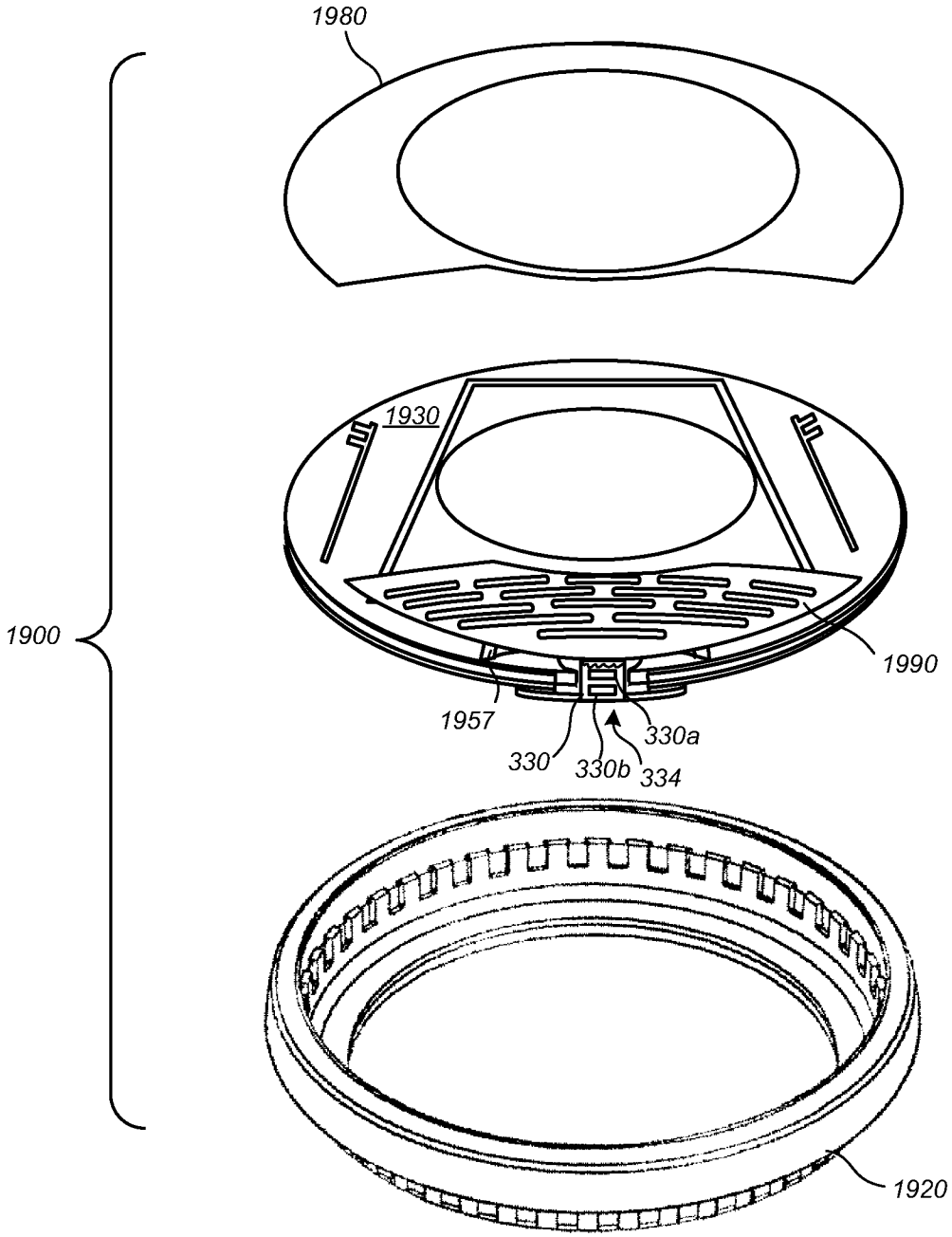

FIG. 23

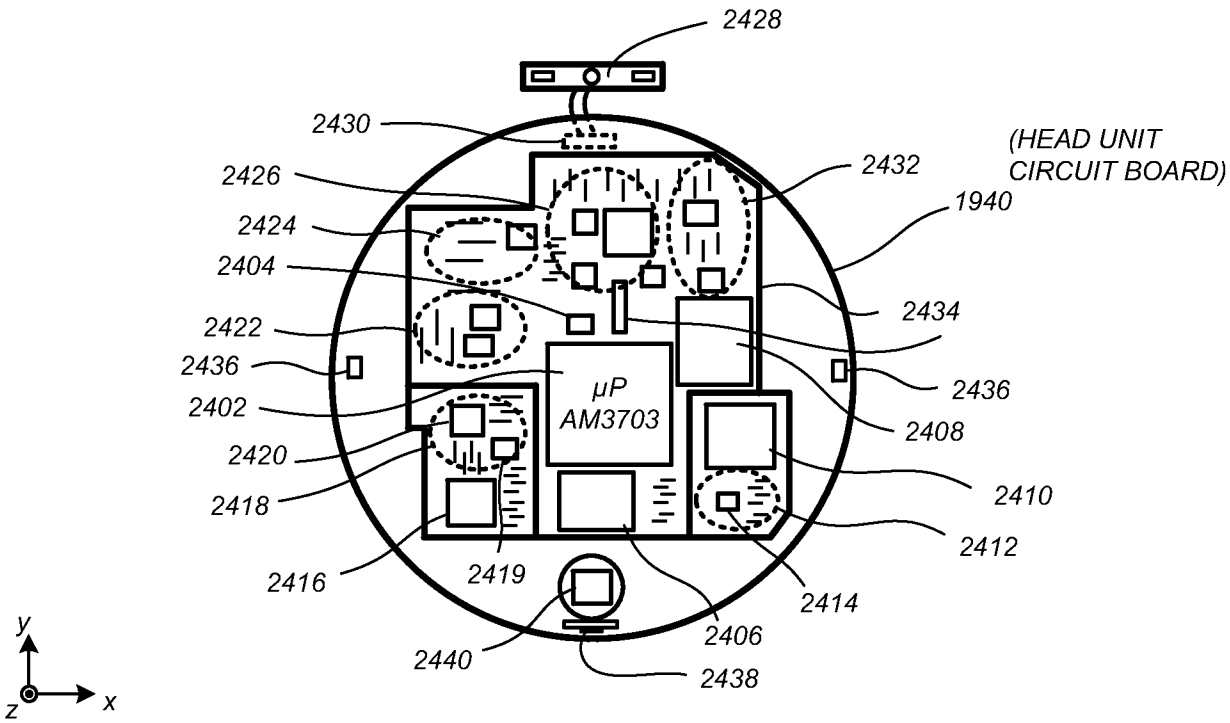
2428
2430
(HEAD UNIT
CIRCUIT BOARD)
2426
2432
1940
2424
2404
2434
2422
2436
μP
AM3703
2436
2402
2408
2420
2410
2418
2412
2416
2419
2414
2406
2440
2438
y
z
x

FIG. 24

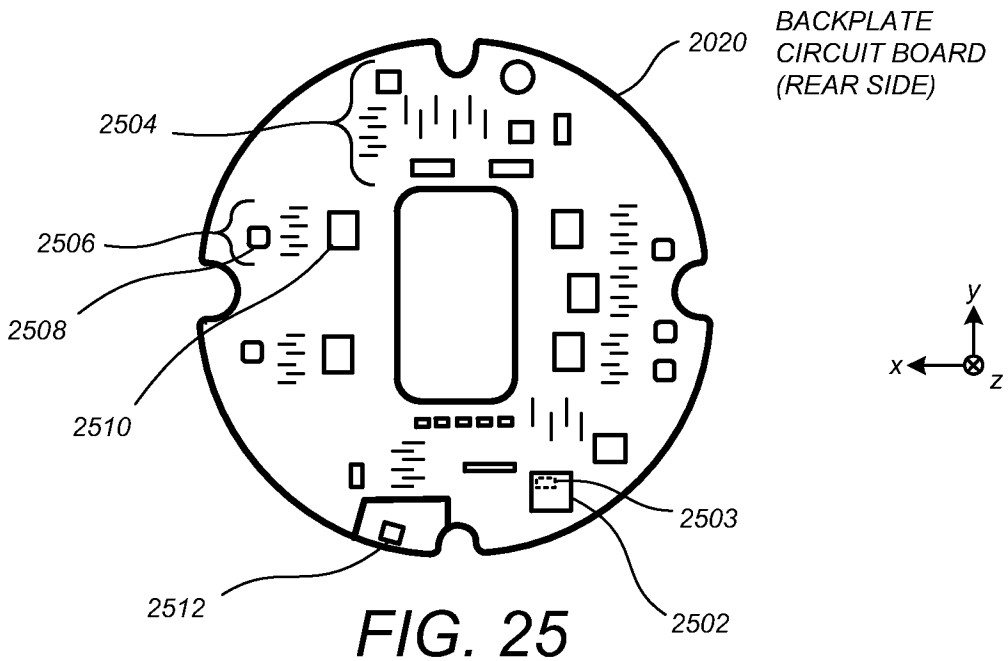
2020
BACKPLATE
CIRCUIT BOARD
(REAR SIDE)
2504
2506
2508
2510
2503
2512
2502
y
x
z

FIG. 25

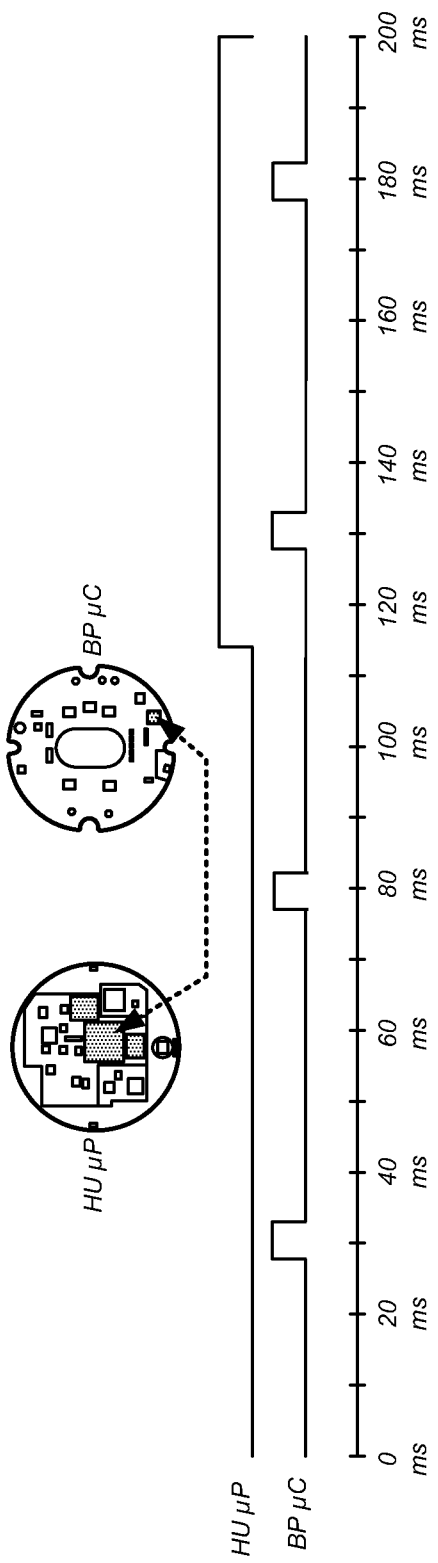

FIG. 26A

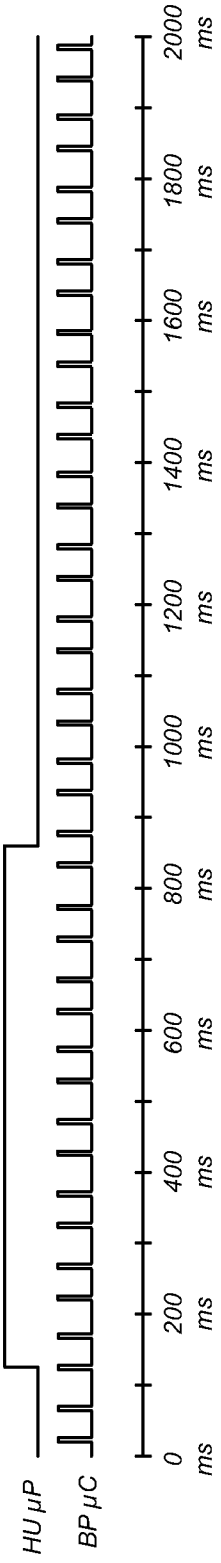

FIG. 26B

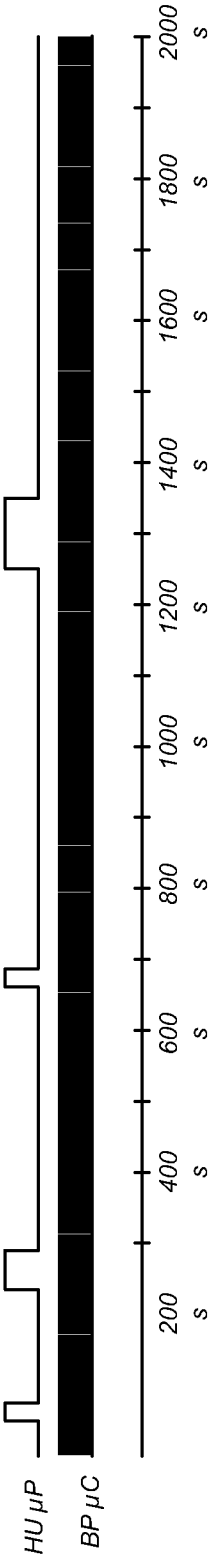

FIG. 26C

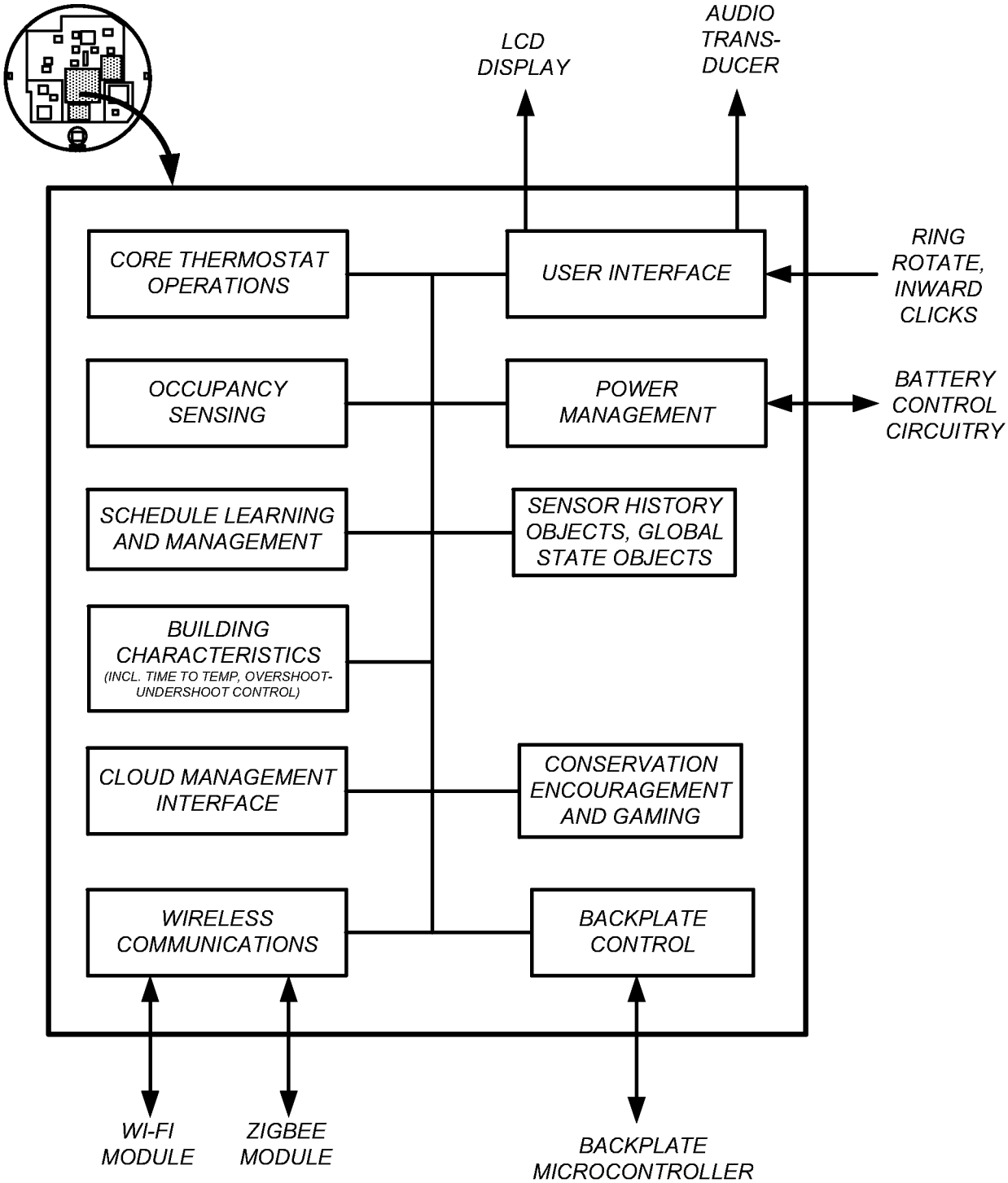
LCD DISPLAY
AUDIO TRANS-DUCER
CORE THERMOSTAT OPERATIONS
USER INTERFACE
RING ROTATE, INWARD CLICKS
OCCUPANCY SENSING
POWER MANAGEMENT
BATTERY CONTROL CIRCUITRY
SCHEDULE LEARNING AND MANAGEMENT
SENSOR HISTORY OBJECTS, GLOBAL STATE OBJECTS
BUILDING CHARACTERISTICS
(INCL. TIME TO TEMP, OVERSHOOT-UNDERSHOOT CONTROL)
CLOUD MANAGEMENT INTERFACE
CONSERVATION ENCOURAGEMENT AND GAMING
WIRELESS COMMUNICATIONS
BACKPLATE CONTROL
WI-FI MODULE
ZIGBEE MODULE
BACKPLATE MICROCONTROLLER

FIG. 27

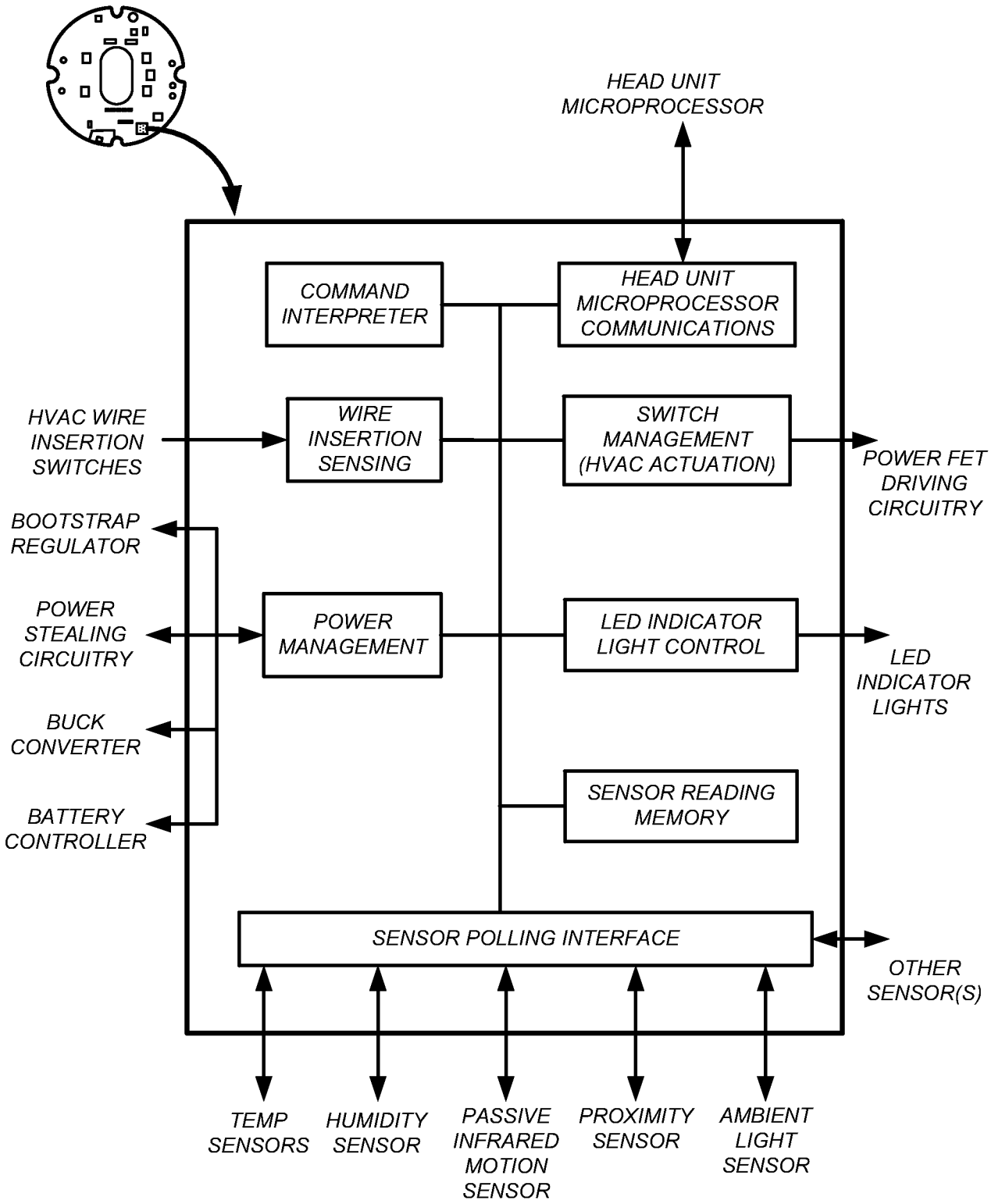
HEAD UNIT MICROPROCESSOR
COMMAND INTERPRETER
HEAD UNIT MICROPROCESSOR COMMUNICATIONS
HVAC WIRE INSERTION SWITCHES
WIRE INSERTION SENSING
SWITCH MANAGEMENT (HVAC ACTUATION)
POWER FET DRIVING CIRCUITRY
BOOTSTRAP REGULATOR
POWER STEALING CIRCUITRY
POWER MANAGEMENT
LED INDICATOR LIGHT CONTROL
LED INDICATOR LIGHTS
BUCK CONVERTER
BATTERY CONTROLLER
SENSOR READING MEMORY
SENSOR POLLING INTERFACE
OTHER SENSOR(S)
TEMP SENSORS
HUMIDITY SENSOR
PASSIVE INFRARED MOTION SENSOR
PROXIMITY SENSOR
AMBIENT LIGHT SENSOR

FIG. 28

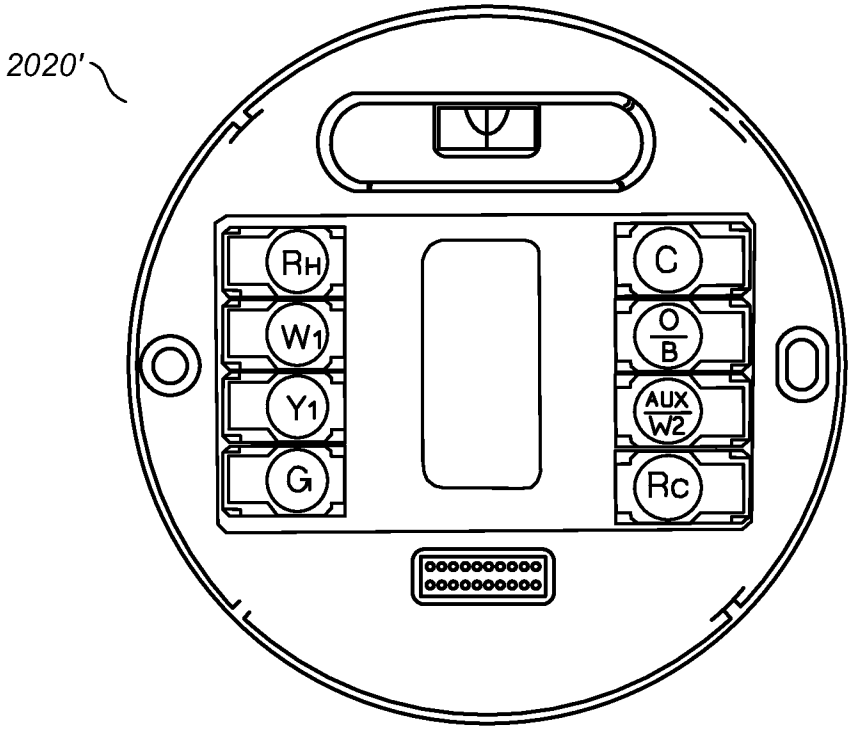

FIG. 29