April 30, 1935. F. G. YAWMAN 1,999,949

SEAT CONNECTING DEVICE FOR SCHOOL FURNITURE

Original Filed June 1, 1931

Fig. 1.

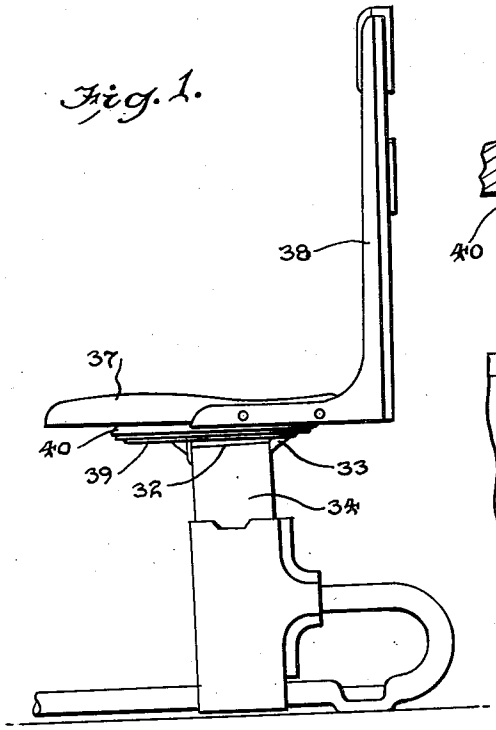

Fig. 2.

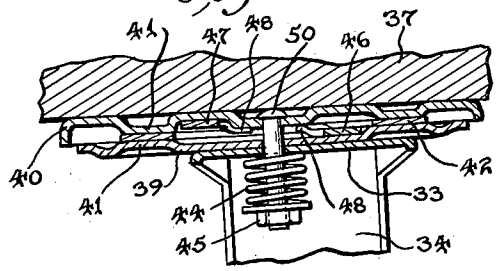

Fig. 3.

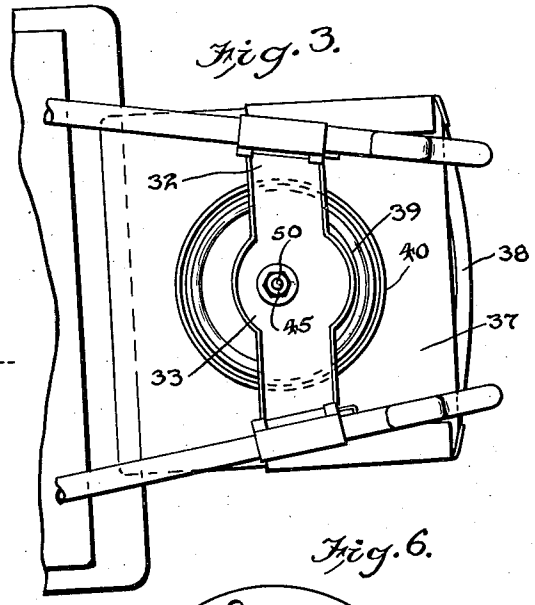

Fig. 4.

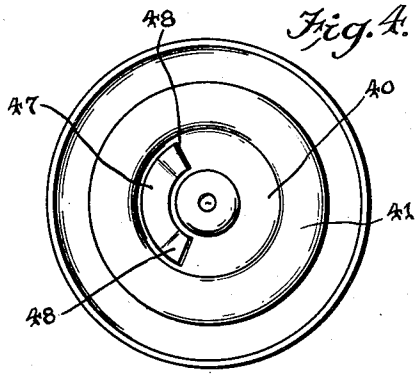

Fig. 5.

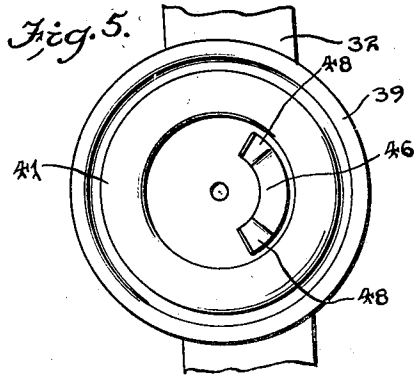

Fig. 6.

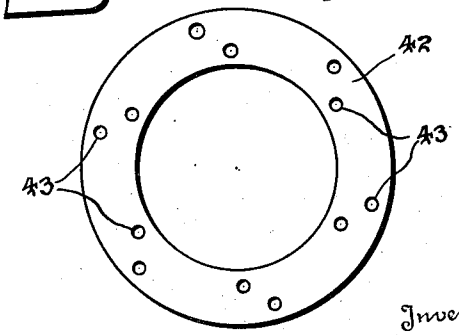

Inventor

Frederick G. Yawman,

By

Attorney

Patented Apr. 30, 1935

1,999,949

UNITED STATES PATENT OFFICE

1,999,949

SEAT CONNECTING DEVICE FOR SCHOOL FURNITURE

Frederick G. Yawman, Rochester, N. Y.

Original application June 1, 1931, Serial No. 541,250. Divided and this application July 20, 1934, Serial No. 736,254

3 Claims. (Cl. 155—77)

The present application is a division of an application filed by me June 1, 1931, Serial No. 541,250 which matured into Patent No. 1,970,874, issued Aug. 21, 1934 for School furniture and the invention relates to the novel means for connecting the seat to its support.

The object of the present invention is to improve the construction of the means for connecting the seat of school furniture to its support and to provide simple, practical and comparatively inexpensive connecting means of strong, durable and sturdy construction for securing a seat to its support so that the seat may be turned on a vertical axis and also tilted backwardly and forwardly.

With these and other objects in view, the invention consists in the construction and novel combination and arrangement of parts hereinafter fully described, illustrated in the accompanying drawing and pointed out in the claims hereto appended, it being understood that various changes in the form, proportion and minor details of construction, within the scope of the claims, may be resorted to without departing from the spirit or sacrificing any of the advantages of the invention.

In the drawing:—

Figure 1 is a side elevation of a portion of a seat provided with means constructed in accordance with this invention for connecting the seat to its support.

Fig. 2 is an enlarged central vertical sectional view taken longitudinally through the seat, the seat support and the connecting means for securing the seat to its support.

Fig. 3 is a reverse plan view of the connecting means and a portion of the seat and seat support.

Fig. 4 is a view of the under side of the desk on the under side of the seat.

Fig. 5 is a top view of the desk at the top of the seat support.

Fig. 6 is a plan view of the wear plate between the disks.

In the illustrated embodiment of the invention the seat support comprises an inverted U-shaped member having a top or cross piece **32** enlarged at the center at **33** and provided with depending channeled arms **34**. The seat may be of any desired construction. In this instance, it comprises a seat portion **37** having a back **38** rigid therewith. The seat has a combined rotary or trunnion movement and a tilting movement on the seat support. To this end, the seat support has a disk **39** welded to the connection portion of the U-shaped member, while the seat **37** has a disk **40** rigidly secured to the under side thereof. These disks are both made of sheet metal and the upper disk **40** has a downwardly pressed circular portion **41** and the lower disk **39** has an upwardly pressed circular portion **41**. These circular portions **41** form circular ribs which provide bearing surfaces for the disks and space the body portions of the disks from each other and provide a central circular space, in which is arranged the means hereinafter described, for limiting the turning movement of the seat. An annular bearing member **42** consisting of a flat ring of brass or other suitable material is interposed between the circular ribs formed by the pressed portions **41**.

The ring is secured to the circular rib of the lower disk **39** and is provided with openings **43** to contain a lubricant. The upper disk **40** carries a depending pivot pin **50** which extends through the lower disk and through the cross piece **32** of the U-shaped member. Below the latter it is surrounded by a coiled spring **44** which at one end abuts against the under side of the seat support and at the other end the spring abuts against an adjustable nut **45** on the pivot pin **50**. This pin will confine the seat to a turning movement on the support and yet will, at times, permit the seat to be tilted backwardly owing to the sliding and relative tilting movement of the pivot bolt **50** in the opening of the lower disk **39**. In the tilting movement of the seat the latter fulcrums on the rear portion of the circular rib or portion **41** of the lower disk and the length of the pivot bolt and the adjustment of the nut thereof limit the tilting movement of the seat. The front portion of the upper disk **40** separates from the front portion of the lower disk **39** in the tilting movement of the seat.

Two arcuate stop plates **46** and **47** are located in the central circular space defined by the circular ribs or portions **41** and are secured respectively to the lower and upper disks **39** and **40** and have their end portions **48** bent substantially at right angles to engage each other and thereby limit the turning movement of the seat in both directions. These arcuate stop plates **46** and **47** are spaced apart equally at their ends when the seat is in a central or normal position.

What is claimed is:—

1. The combination with a seat and a support, of upper and lower horizontal disks secured respectively to the seat and the seat support, the upper disk having a downwardly pressed annular portion and the lower disk having an upwardly pressed annular portion, said pressed portions

forming circular bearing surfaces and defining a central space, a central pivot pin connecting the disks and permitting a turning movement of the upper disk and seat, spring means acting on the pivot pin to permit the upper disk to tilt, said upper disk in its tilting movement fulcruming on the pressed portion of the lower disk at the back thereof and at a point spaced from the pivot pin, and normally spaced stop plates secured respectively to the upper and lower disks and located in the central space defined by the pressed portions of the disks, said stop plates limiting the turning movement of the upper disk and seat in both directions.

2. The combination with a seat and a support, of upper and lower horizontal disks secured respectively to the seat and the support, the upper disk having a downwardly pressed annular portion and the lower disk having an upwardly pressed annular portion, said pressed annular portions forming circular bearing surfaces and defining a central space, a central pivot pin connecting the disks and permitting a turning movement of the upper disk and seat, spring means acting on the pivot pin to permit the upper disk to tilt, said upper disk in its tilting movement fulcruming on the pressed portion of the lower disk at the back thereof and at a point spaced from the pivot pin, and normally spaced arcuate stop plates secured respectively to the upper and lower disks and arranged in said central space and having terminal portions deflected approximately at right angles and arranged to engage each other to limit the turning movement of the upper disk and seat in both directions.

3. The combination with a seat and a support, of upper and lower horizontal disks secured respectively to the seat and the seat support, the upper disk having a downwardly pressed annular portion and the lower disk having an upwardly pressed annular portion, said pressed portions forming circular bearing surfaces and defining a central space, a ring interposed between the circular bearing surfaces of the pressed portions and secured to one of the pressed portions and provided with lubricant receiving openings, and spring means acting on the pivot pin to permit the upper disk to tilt.

FREDERICK G. YAWMAN.