Aug. 24, 1943. W. J. FEDORCHAK 2,327,629

GAUGING MACHINE

Filed Oct. 3, 1941 6 Sheets-Sheet 1

Fig. 1.

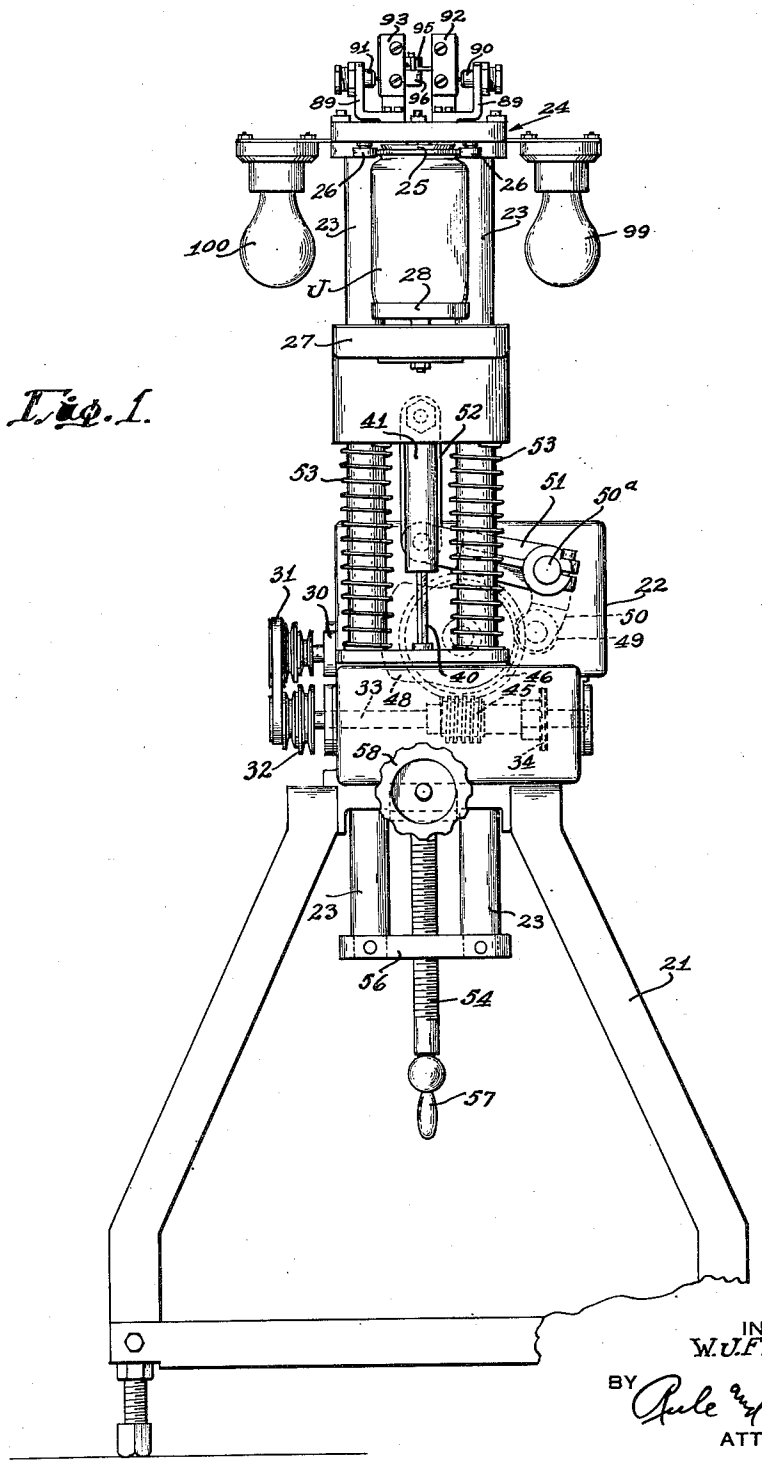


INVENTOR
W. J. FEDORCHAK
BY Rule and Hoge
ATTORNEYS

Aug. 24, 1943. W. J. FEDORCHAK 2,327,629

GAUGING MACHINE

Filed Oct. 3, 1941 6 Sheets-Sheet 2

Fig. 3.

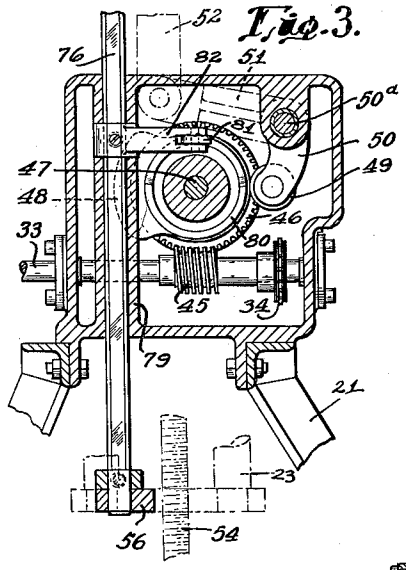


Fig. 2.




INVENTOR
W. J. FEDORCHAK
BY Ruley & Hoge
ATTORNEYS

Aug. 24, 1943. W. J. FEDORCHAK 2,327,629

GAUGING MACHINE

Filed Oct. 3, 1941 6 Sheets-Sheet 3

Fig. 4.

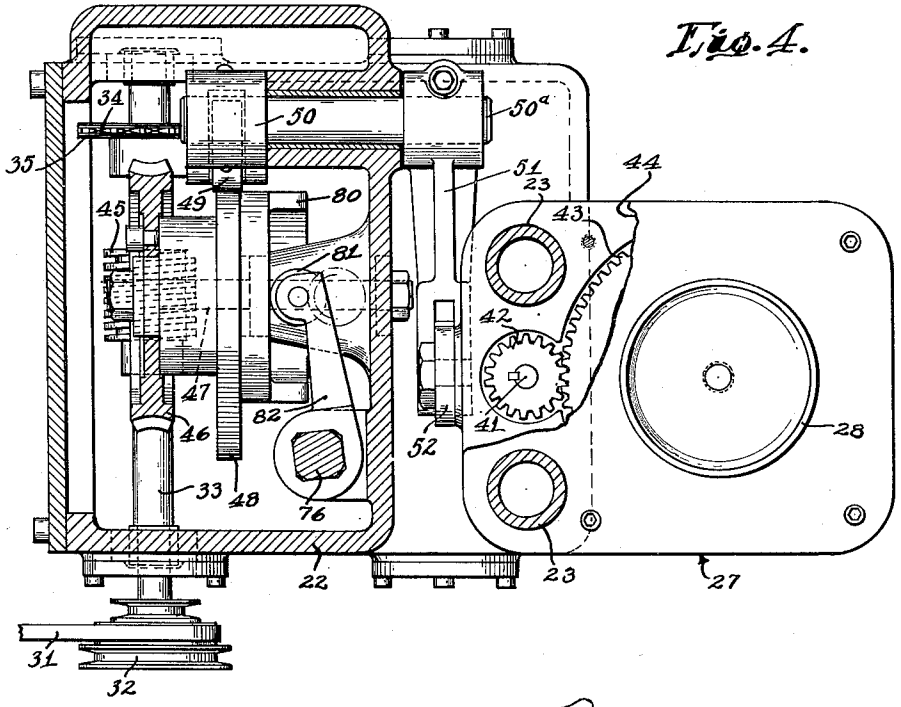


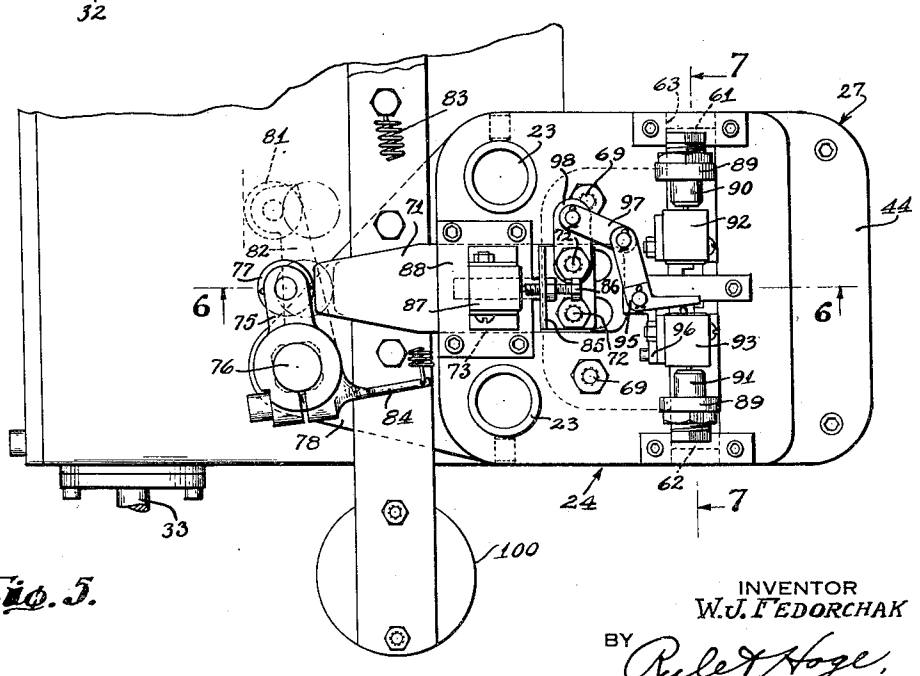


Fig. 5.

INVENTOR
W. J. FEDORCHAK
BY Ruley & Hoge
ATTORNEYS

Aug. 24, 1943. W. J. FEDORCHAK 2,327,629

GAUGING MACHINE

Filed Oct. 3, 1941 6 Sheets-Sheet 4

Fig. 10.

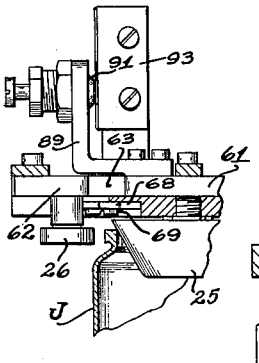


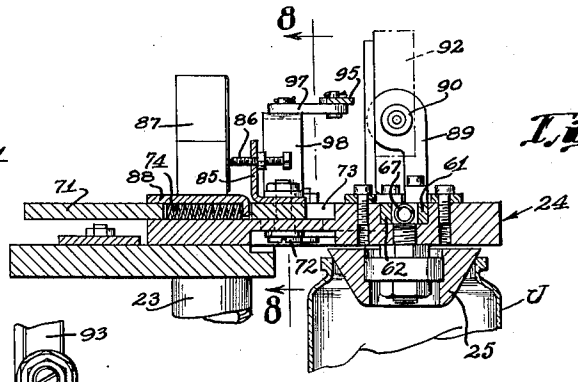


Fig. 6.

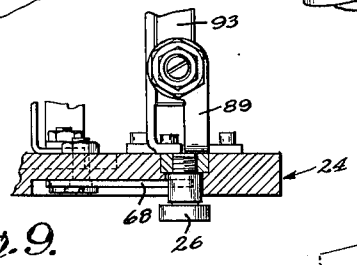


Fig. 9.

Fig. 11.

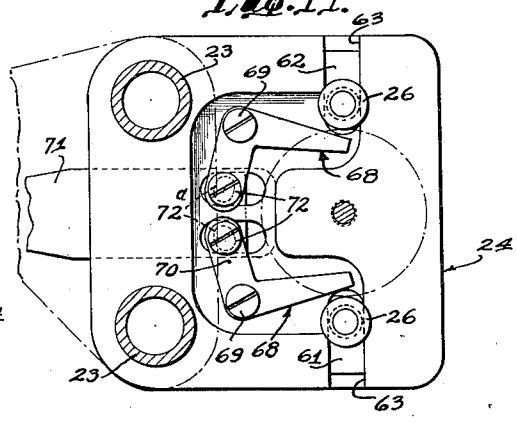


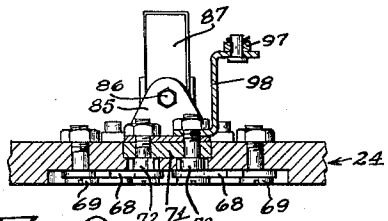


Fig. 8.

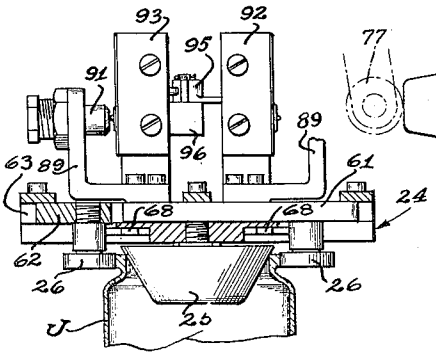


Fig. 7.

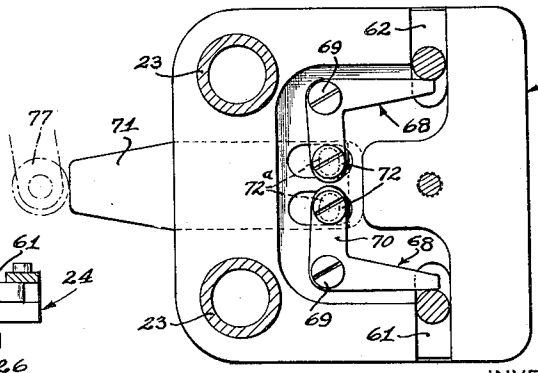


Fig. 12.

INVENTOR
W. J. FEDORCHAK
BY Rule & Hoge,
ATTORNEYS

Aug. 24, 1943. W. J. FEDORCHAK 2,327,629

GAUGING MACHINE

Filed Oct. 3, 1941 6 Sheets-Sheet 5

Fig. 13.

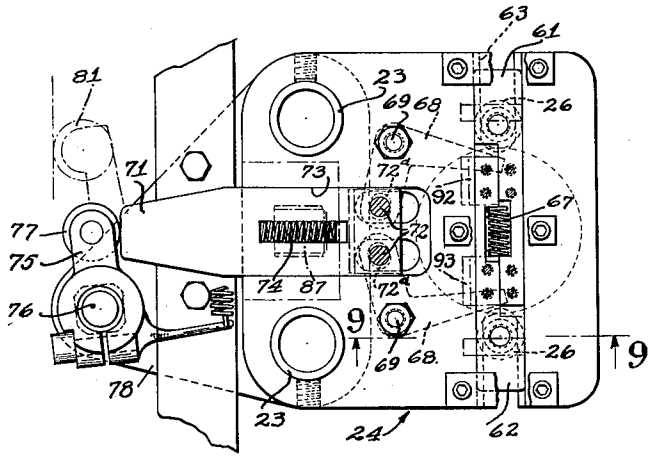


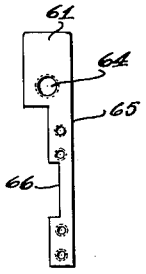


Fig. 14.

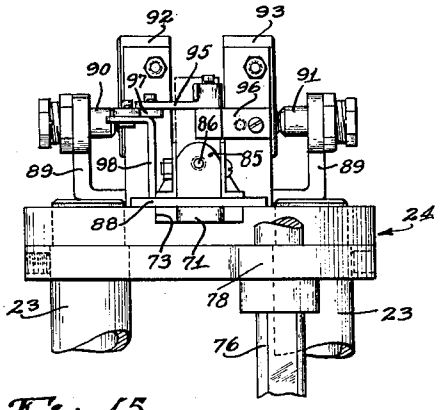


Fig. 15.

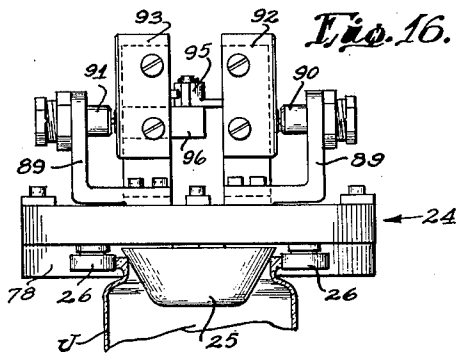


Fig. 16.

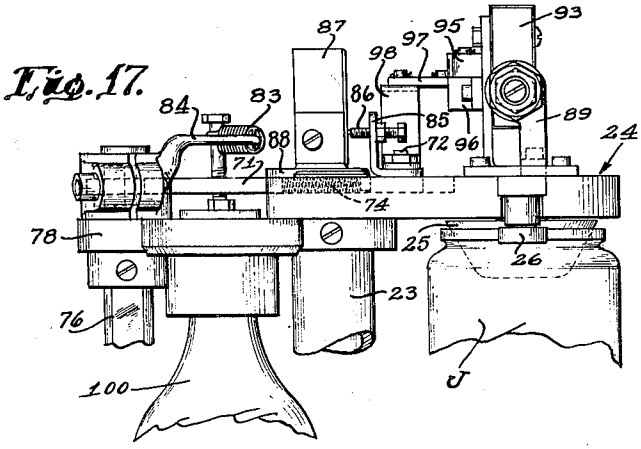


Fig. 17.

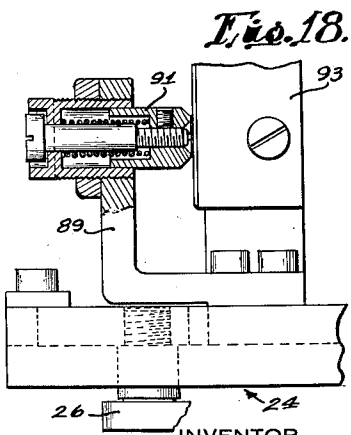


Fig. 18.

INVENTOR
W. J. FEDORCHAK
BY Rule & Hoge
ATTORNEYS

Aug. 24, 1943. W. J. FEDORCHAK 2,327,629

GAUGING MACHINE

Filed Oct. 3, 1941 6 Sheets-Sheet 6

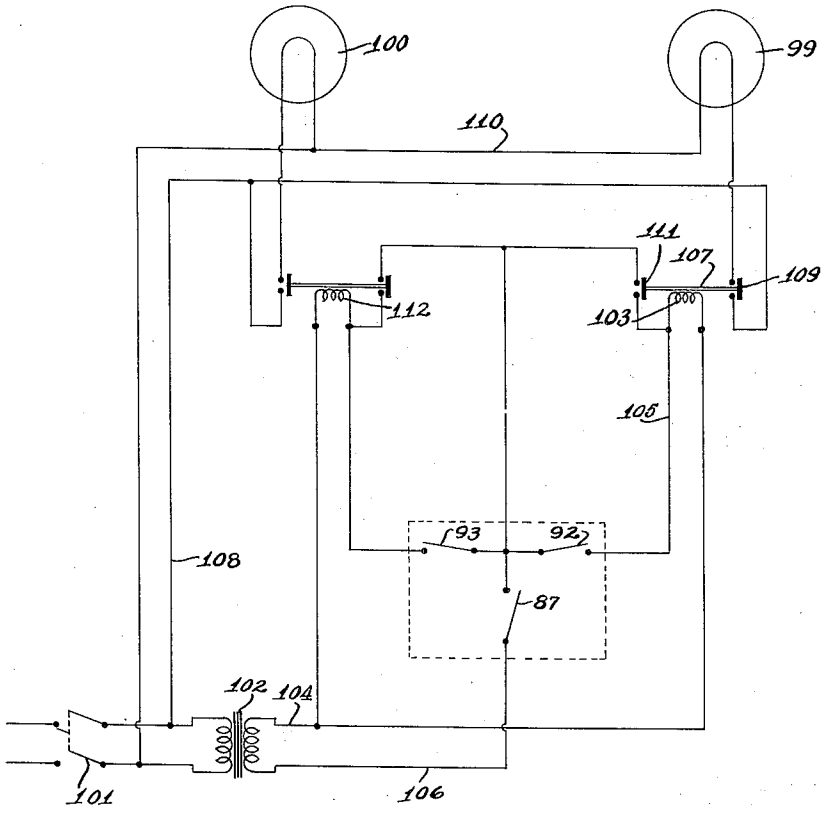


Fig. 19.

INVENTOR
W. J. FEDORCHAK
BY Ruler & Hoge.
ATTORNEYS

Patented Aug. 24, 1943

2,327,629

# UNITED STATES PATENT OFFICE

2,327,629

## GAUGING MACHINE

William J. Fedorchak, Granite City, Ill., assignor to Owens-Illinois Glass Company, a corporation of Ohio

Application October 3, 1941, Serial No. 413,465

13 Claims. (Cl. 33—178)

My invention relates to gauging apparatus and particularly to machines for gauging the diameters of circular articles. In the form herein illustrated, the machine is designed for gauging the exterior diameters of the finishes or neck portions of bottles, jars and other hollow articles.

An object of my invention is to provide a machine of the character indicated which is adapted to gauge articles with rapidity and accuracy.

A further object of the invention is to provide such a machine including adjusting means by which articles of different diameters throughout a comparatively wide range may be gauged and which, moreover, is adjustable to gauge accurately either within very close limits of tolerance or to allow for a greater degree of tolerance.

A further object of the invention is to provide a gauging machine of the character indicated adapted to indicate diameters both above and below a specified standard and comprising signalling means to indicate automatically when an article is either of greater or less diameter than the specified standard.

A further object of the invention is to provide a machine of the character indicated which operates continuously and automatically, requiring only the manual placing and removal of the articles to be gauged, and providing means by which such articles may be positioned on and removed from the machine with ease and rapidity.

Other objects of the invention will appear hereinafter.

Referring to the accompanying drawings which illustrate the machine as used for gauging glass jars:

Fig. 1 is a front elevation of the machine.

Fig. 2 is a sectional side elevation.

Fig. 3 is a sectional elevation through the gear casing at the line 3—3 on Fig. 2.

Fig. 4 is a part-sectional plan view showing the gear casing and mechanism therein and also gearing for rotating the work-holding pad.

Fig. 5 is a fragmentary top plan view of the machine.

Figs. 6 and 7 are sectional elevations at the lines 6—6 and 7—7 respectively on Fig. 5.

Fig. 8 is a sectional elevation substantially at the line 8—8 on Fig. 6.

Fig. 9 is a sectional detail at the line 9—9 on Fig. 13.

Fig. 10 is a fragmentary detail view similar to Fig. 7 but showing the gauging roll in retracted position.

Fig. 11 is a section at the line 11—11 on Fig. 2, looking in an upward direction and with certain parts omitted.

Fig. 12 is a view similar to Fig. 11 but with the parts moved out of gauging position.

Fig. 13 is a sectional plan view showing particularly the gauging head near the top of the machine.

Fig. 14 is a detail view showing one of the roll carrying slides.

Fig. 15 is a rear elevation view of the gauging head and parts mounted thereon.

Fig. 16 is a front elevation of the same and also shows the centering cone and gauging rolls in operative position.

Fig. 17 is a side elevation of the gauging head and associated parts.

Fig. 18 is a detail view showing a slide and an electrical contact device mounted thereon.

Fig. 19 is a wiring diagram of the control circuits.

Referring particularly to Figs. 1 to 3, the machine in general terms comprises a frame 21 surmounted by a gear casing 22 bolted thereto, a pair of vertical posts 23 extending through the gear casing and adjustable up and down, a gauging head 24 secured to the posts 23 at their upper ends, a centering cone 25 carried by said head for centering articles J to be gauged, gauging rolls 26 carried by slides mounted in said head, a bracket 27 carrying a pad 28 for supporting the articles, means for periodically lifting and lowering said bracket and with it an article J to and from gauging position, mechanism for rotating the pad 28 and article thereon during the gauging operation, gauging mechanism including means for actuating the gauging rolls, and electrical devices actuated by the gauging mechanism for indicating the articles which are either smaller or larger than the required diameter.

The circular pad 28 for supporting the workpiece J is journalled in the bracket 27 and is continuously rotated by an electric motor 30 (Fig. 2) mounted on the gear case 22 and operating through a train of gearing extending therefrom to the pad 28. Such gearing includes a belt 31 (Figs. 1, 2 and 4) driven by the motor and driving a pulley 32 keyed to a worm drive shaft 33 journalled in the gear case 22. The belt 31 is adjustable on the pulleys for adjustably varying the speed. Keyed to the shaft 33 is a sprocket wheel 34. A sprocket chain 35 is trained over the gear 34 and a gear 36 keyed to a worm shaft 37 on which is a worm driving a worm gear 38 on a vertical shaft 39 journalled in the casing 22. The shaft 39 has a squared section 40 extending above

the gear casing and telescoping with a shaft section 41 journalled for rotation in the bracket 27. The shaft 41 carries at its upper end a spur pinion 42 which drives a spur gear 43 secured to the stem of the pad 28. The latter may be cup-shaped or provided with a rim for holding the work-piece J centered thereon. A removable cover plate 44 (Fig. 4) overlies the gears 42, 43. The motor operates through the gearing just described to continuously rotate the work-holding pad.

The bracket 27 is periodically reciprocated vertically by the motor operating through mechanism including the drive shaft 33, a worm 45 thereon, and a worm gear 46 driven thereby. The worm gear is mounted on a shaft 47 in the gear case. A cam 48 (Figs. 2, 3 and 4) operates through a cam roll 49 running thereon to rock an arm 50 and shaft 50a to which it is keyed, said shaft journalled in the gear case. A second arm 51 keyed to the shaft 50a, is connected through a vertically disposed link 52 to the bracket 27. It will be seen that with the gearing just described the high part of the cam 48 will operate once during each rotation of the worm gear 46 to lower the bracket 27, permitting the operator to place a work-piece J thereon, and then to lift the bracket and work-piece for the gauging operation. Coil springs 53 on the posts 23 and held under compression between the bracket 27 and the gear case, serve to lift the bracket 27 under the control of the cam 48.

The gauging head 24 is adjustable up and down as required for gauging articles of different lengths. The means for effecting this adjustment includes a vertical screw-threaded shaft 54 (Figs. 1 and 2), the upper end of which is provided with a head 55 by which the shaft is journalled in the gear case. The shaft is threaded through a supporting plate or yoke 56 fixed to and carrying the posts 23. A hand crank 57 serves for rotating the shaft 54 and thereby adjusting the yoke 56, posts 23 and head 24 up or down. The shaft 54 is secured in its adjusted position by a clamping screw threaded through the wall of the gear case and provided with a knob 58.

The centering cone 25 mounted at the under side of the gauging head and free to rotate, serves to hold the mouth of the jar or work-piece centered during the gauging operation. The gauging rolls 26 are journalled on slides 61 and 62 which are mounted to reciprocate in slideways 63 in the gauging head. The slides are arranged to position the rolls at diametrically opposite points with respect to the periphery of the work-piece. The slides are of the shape indicated in Fig. 14, each comprising a comparatively wide end portion provided with an opening 64 for the pivot pin of the gauging roll and having a comparatively narrow body portion 65. When the two slides are positioned in the slideway they overlap with the parts 65 extending alongside of each other as shown in Fig. 13. Recesses 66 in the slides provide a pocket for a coil spring 67 held under compression with its ends bearing against shoulders formed respectively on the two slides so that the spring continuously exerts an endwise pressure on the two slides in directions tending to move each of the gauging rolls inwardly.

Means for periodically moving the gauging rolls 26 outwardly to inoperative position include a pair of bell crank levers 68 pivoted at 69 on the under face of the gauging head and having arms 70 connected to one end of a slide bar 71, by means of pivot bolts 72 clamped to the slide bar and engaging elongated slots 72a in the arms 70. The slide bar 71 is mounted to reciprocate lengthwise in a slideway 73 (Figs. 13, 15) in the gauging head. A coil compression spring 74 moves the slide 71 inwardly or to the left (Fig. 13) for swinging the bell cranks 68 away from the gauging rolls as shown in Figs. 11 and 13. The slide is moved in the opposite direction by means including a rock arm 75 keyed to a rock shaft 76 and carrying a roll 77 contacting with the slide bar. The rock shaft 76 is journalled in a bracket 78 attached to the gauging head and extends vertically downward through a tubular bearing post 79 (Fig. 3) formed in the gear case, the lower end of said shaft being journalled in the plate 56. The shaft 76 is rocked in one direction by a cam 80 (Figs. 2 and 4) connected to the cam 48 for rotation therewith. The cam 80 operates through a roll 81 on a rock arm 82 to rock the shaft 76. The rock arm 82 may have a splined connection with the rock shaft to permit up and down movement of the latter when the gauging head is adjusted up and down, while the rock arm is held against vertical movement by its bearing in the casing (Fig. 3). The roll 81 is held to its cam 80 by a tension spring 83 operating through a rock arm 84 on the rock shaft 76.

It will be seen that during each complete rotation of the worm gear 46 the shaft 76 is first rocked in one direction for spreading the gauging rolls, permitting the work-piece to be positioned therebetween, and then in the reverse direction to permit operation of the gauging rolls. The operation of the cam 80 is synchronized with that of the cam 48 so that the gauging rolls are in their outward or inoperative position during the placing of a work-piece and lifting it to gauging position, the gauging rolls being then moved inward for the gauging operation and thereafter retracted before the work-piece is lowered. It will be seen that the slides with the gauging rolls thereon are mounted for floating movement to accommodate themselves to the size, shape and position of the surface under test.

The electrical switch mechanism actuated by the gauging mechanism will now be described. Mounted on the slide 71 by means of a bracket 85 is a contact screw 86 cooperating with a microswitch 87 having a fixed mounting with respect to the gauging head 24. As shown (see Figs. 5 and 6), said switch is mounted on a plate 88 which provides a slideway for the slide 71. When the slide is withdrawn or moved to the left for the gauging operation, the contact 86 engages the switch 87 and thereby closes an electric circuit at the beginning of the gauging cycle, the switch remaining closed until the slide is again advanced to spread the contact rolls 26. Mounted on the slide 61 are brackets 89 (Figs. 7, 10 and 15 to 18) which carry electrical contacts 90 and 91 which cooperate respectively with a pair of microswitches 92 and 93 which are mounted on the slide 62. The contact 90 is adapted to actuate the switch 92 when the diameter of the work-piece J is less than the required gauge. When the diameter of the work-piece is over-size, the contact 91 actuates the switch 93.

The over-maximum switch 93 is of the reset type so that it remains closed when actuated by the contact 91 independently of said contact until reset. The purpose of this will presently be described. The means for resetting the switch 93 comprises a bell crank 95 mounted on a bracket 96 on the switch casing and connected through a link 97 to a bracket 98 bolted to the slide 71.

After the switch has been contacted by the contact 91, it remains set until the slide 71 has again been moved outwardly to withdraw the gauging rolls, thus causing the bell crank 95 to reset the button of the micro-switch. The purpose of using a switch of this type is to detect any extruding or slight enlargement or protuberance on the surface being gauged, which might not retain the micro-switch closed for a sufficient length of time to insure the operation of the indicating mechanism. For example, a sharp extrusion or seam running vertically on the neck of the article might not hold contact on the micro-switch long enough to close the holding relay, whereas a reset type of switch remains closed after tripping until reset mechanically. Signal lamps 99 and 100, located at any convenient position, are lighted respectively by the closing of the switches 92 and 93.

Referring to Fig. 19, electric current may be supplied from any convenient source as, for example, a commercial circuit supplying an alternating current of 220 volts. When the line switch 101 is closed, current is supplied to a step-down transformer 102 which supplies a lower potential current, for example, 12 volts, to the relay magnets. The switch 87 is periodically closed automatically as before described preliminary to the gauging operation. Assuming a jar J to be in position for testing, if the diameter is less than the required gauge, the micro-switch 92 will be closed. This establishes a circuit for a relay magnet 103, which circuit may be traced from one terminal of the transformer secondary through conductor 104, relay coil 103, conductor 105, switches 92 and 87, and conductor 106, to the other terminal of the transformer. The magnet 103 being energized, closes a double pole switch 107 and establishes a circuit for the signal lamp 99. This circuit may be traced from the main line through conductor 108, switch contact 109, lamp 99 and conductor 110. The operation of the relay also establishes a holding circuit for the relay magnet through a contact 111 connected in parallel with the switch 92. The signal lamp thus indicates that the jar under test is less than the required gauge so that it may be discarded. If the diameter is greater than the maximum diameter for which the gauge is adjusted, the switch 93 will be closed and actuate a relay 112 which operates in the same manner as the relay 103, and lights the signal lamp 100, which is preferably of a different color than the light 99, thereby indicating that the jar is over-size.

A résumé of the operation is as follows: The motor 30 (Fig. 2) rotates the work-holding pad 28 continuously, and through the cam 48 (Figs. 1 and 2) periodically lowers the bracket 27 and pad 28, permitting the placing thereon of a jar to be gauged. The bracket 27 is then raised, bringing the jar to gauging position and centering it on the cone 25. The slide 71, which at this time is in its projected position for holding the gauging rolls 26 apart (Figs. 10 and 12), is now retracted so that the gauging rolls 26 are drawn into contact with the jar. If the diameter of the jar finish which is being gauged is within the prescribed limits for which the apparatus is adjusted, neither of the contacts 90, 91, engages its switch, so that the signal lamps remain dark. If the jar finish is below the specified gauge, the slide 61 carrying the contacts 90 and 91 (Figs. 7 and 16) is moved to the left far enough to cause the switch contact 90 to close the switch 92, establishing a circuit for the signal lamp 99. If the diameter under test is over-size, the slide 61 is drawn to the right sufficiently to cause contact 91 to actuate the switch 93, thereby lighting the signal lamp 100.

Modifications may be resorted to within the spirit and scope of my invention.

I claim:

1. Apparatus for gauging round surfaces of articles, said apparatus comprising a support for the articles, means for rotating the support, means for periodically lifting and lowering the support, a gauging head, means thereon for centering an article carried on the support, signalling devices, and means operated automatically by the rotating article for causing operation of a signalling device when the diameter of the surface under test does not come within a predetermined gauge limit.

2. Apparatus for gauging round surfaces of articles, said apparatus comprising a support for the articles, means for rotating the support, means for periodically lifting and lowering the support, a gauging head, means thereon for centering an article carried on the support, slides on said head, gauging rolls carried by said slides in position to contact the surface to be gauged at diametrically opposite points, signalling means, and means actuated by said slide for causing the signalling means to operate.

3. Gauging apparatus comprising in combination a pad for supporting an article to be gauged, means for rotating the pad, an article centering device positioned above the pad, means for periodically lifting and lowering said pad for centering the article in a gauging position and for thereafter releasing the article, and electro-responsive means actuated by said article to indicate a size above or below the predetermined gauge.

4. Gauging apparatus comprising in combination a pad for supporting an article to be gauged, means for rotating the pad, an article centering device positioned above the pad, means for periodically lifting and lowering said pad for centering the article in a gauging position and for thereafter releasing the article, slides, gauging rolls carried thereby on opposite sides of the article under test when the latter is in gauging position, means for moving the slides and bringing said rolls into contact with the article at diametrically opposite points thereon, signalling devices, and means controlled by the relative positions of the slides for actuating a signalling device when said rolls are spaced apart either a greater or less distance than that determined by an article coming within the prescribed gauge limits.

5. Gauging apparatus comprising a pair of slides mounted for floating movement, a pair of rolls mounted on said slides respectively, electrical contact devices mounted on one slide, and electrical switches mounted on the other slide and positioned to be actuated by said contacts respectively when the contact carrying slide is moved in opposite directions relative to the switch-carrying slide.

6. Gauging apparatus comprising means for centering an article having a round surface to be gauged, means for rotating the article about a stationary axis concentric with said surface, a pair of slides, rolls carried by said slides respectively and arranged to engage said surface at diametrically opposite points, switches carried by one of the slides, switch-actuating devices carried

by the other slide, and signalling means controlled by said switches.

7. Gauging apparatus comprising a pair of parallel slides, means for mounting said slides for lengthwise movement in a straight line, rolls carried respectively by said slides and having their centers in a line extending in the direction of movement of the slides, means for actuating the slides and moving the rolls toward and from each other for bringing said rolls into and out of contact with an article to be gauged, contact devices carried on one of said slides and movable as a unit therewith, electro-responsive devices carried on the other said slide and movable therewith in the path of the said contact devices and actuated thereby, and signalling means controlled by said electro-responsive devices.

8. Gauging apparatus comprising in combination a pair of parallel overlapping slide bars, gauging rolls carried respectively by said bars, spring means for urging said bars lengthwise in directions tending to move said rolls toward each other, automatic means for periodically moving said slide bars in opposition to said spring means for increasing the distance between said rolls, means for positioning between said rolls an article to be gauged, and gauge indicating means controlled by said slides.

9. Gauging apparatus comprising in combination a pair of parallel overlapping slide bars, gauging rolls carried respectively by said bars, spring means for urging said bars lengthwise in directions tending to move said rolls toward each other, automatic means for periodically moving said slide bars in opposition to said spring means for increasing the distance between said rolls, means for positioning between said rolls an article to be gauged, electro-responsive devices actuated by said slide bars, and signalling means controlled by said electro-responsive devices.

10. Gauging apparatus comprising in combination a pair of parallel overlapping slide bars, gauging rolls carried respectively by said bars, spring means for urging said bars lengthwise in directions tending to move said rolls toward each other, automatic means for periodically moving said slide bars in opposition to said spring means for increasing the distance between said rolls, means for positioning between said rolls an article to be gauged, electro-responsive devices, and signalling means controlled thereby, the operation of said electro-responsive devices being dependent upon the relative positions of said slides, said electro-responsive devices operable to actuate the signalling means when the distance the rolls are held apart by an article under test is greater or less than that determined by an article coming within the prescribed gauging limits.

11. Gauging apparatus comprising a gauging head, an article-centering device rotatably mounted at the under surface of said gauging head, a supporting pad for an article to be gauged, a carrier on which said pad is rotatably mounted, said pad and carrier being spaced below said centering device, automatic means for rotating the pad, automatic means for periodically moving the supporting pad up and down for moving articles to be gauged toward and from the gauging head, contacting means carried by said gauging head for contacting said articles, a signalling device, and means controlled by the position of said contacting means for actuating the signalling device.

12. Gauging apparatus comprising vertical posts, a bracket mounted for up and down movement on said posts, an article-holding pad mounted for rotation on said bracket, a gauging head spaced above said pad, gauging means carried by said head, a motor having a stationary mounting, means actuated by said motor for periodically moving the said bracket up and down for moving an article supported on said pad to and from the gauging head, and means actuated by the motor for rotating said pad.

13. Gauging apparatus comprising vertical posts, a bracket mounted for up and down movement on said posts, an article-holding pad mounted for rotation on said bracket, a gauging head spaced above said pad, gauging means carried by said head, said gauging means comprising a pair of slides on the gauging head, contact rolls carried by said slides, a cam shaft, cams mounted thereon, driving connections between the motor and the cam shaft, means actuated by one said cam for moving the slides and thereby moving the contact rolls toward and from the gauging position, and operating connections between the other said cam and said bracket for periodically moving the bracket up and down.

WILLIAM J. FEDORCHAK.