Dec. 31, 1946. R. A. WEAGANT 2,413,396

MULTIPLEX TRANSMISSION SYSTEM

Filed June 13, 1942 3 Sheets-Sheet 1

Fig. 1.

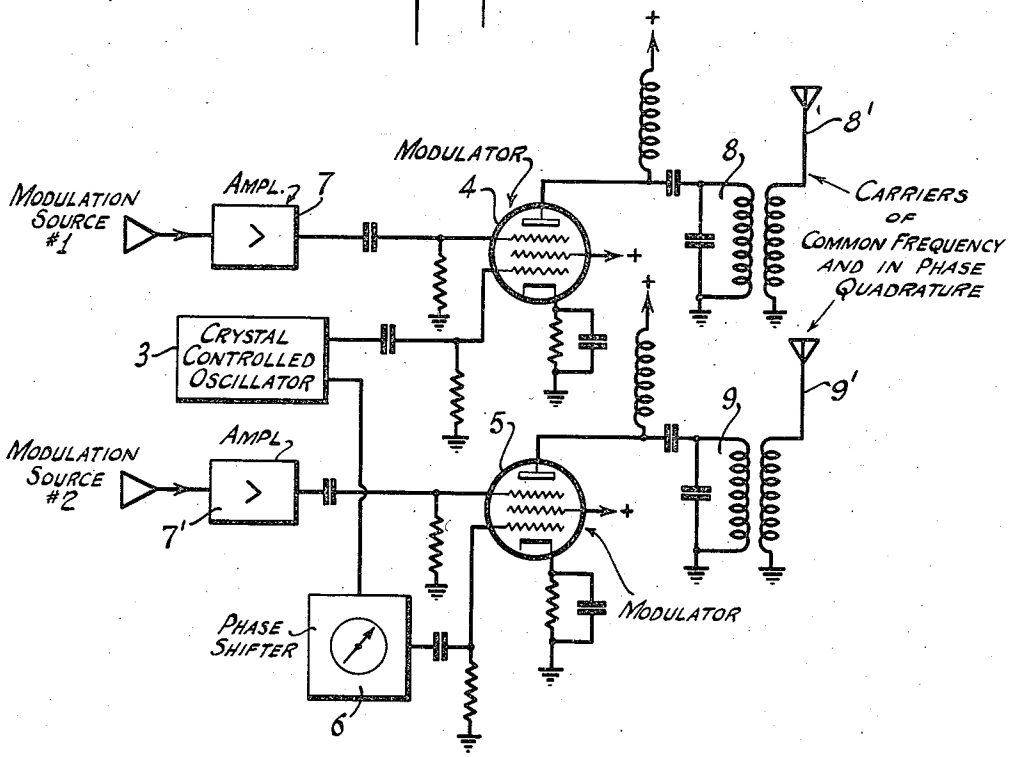

Fig. 1a.

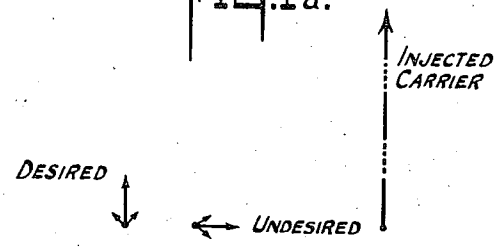

INVENTOR
ROY A. WEAGANT.
BY H. S. Grover
ATTORNEY

Dec. 31, 1946. R. A. WEAGANT 2,413,396

MULTIPLEX TRANSMISSION SYSTEM

Filed June 13, 1942 3 Sheets-Sheet 2

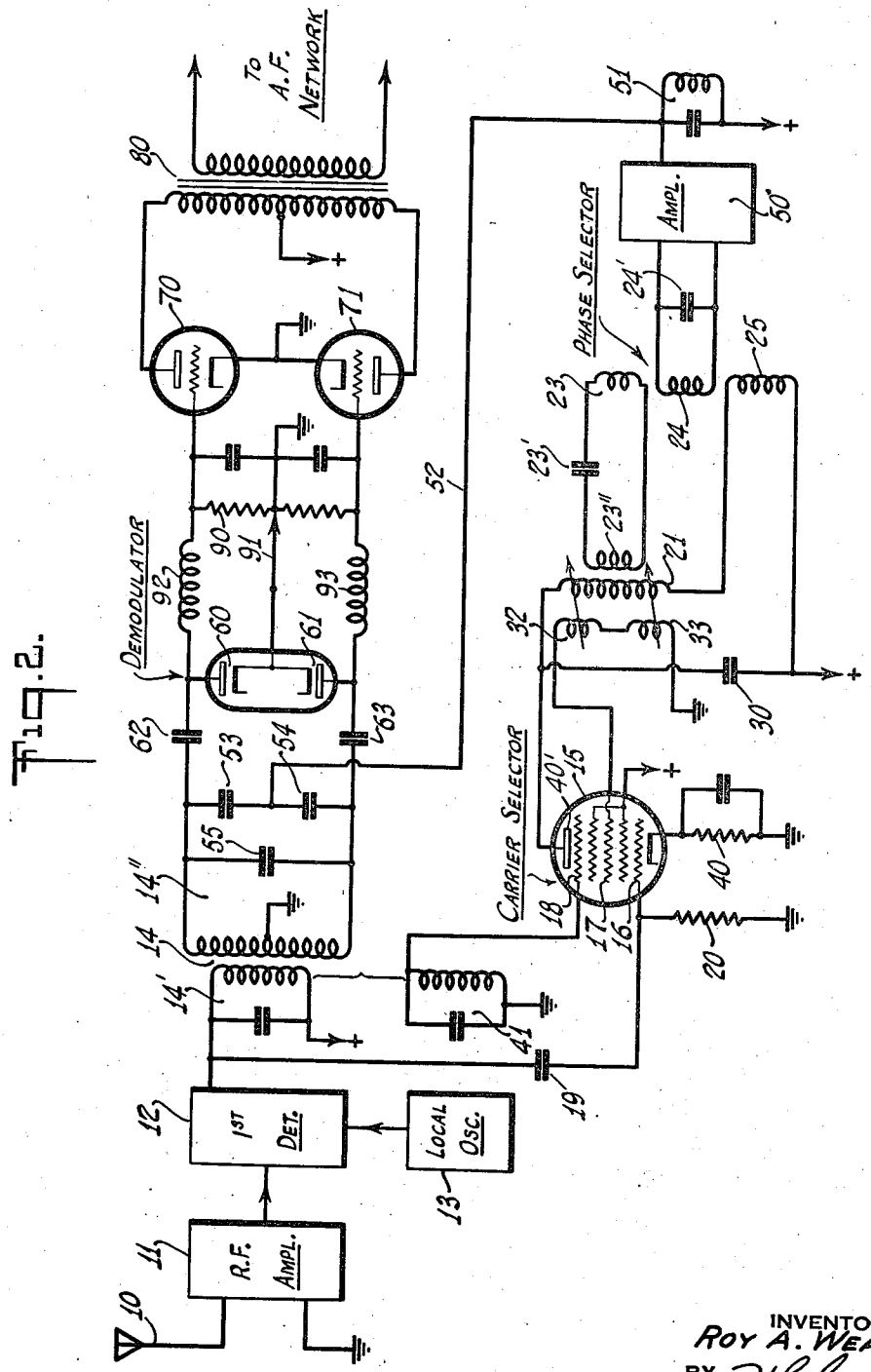

Fig. 2.

INVENTOR
ROY A. WEAGANT.
BY H. G. Grover
ATTORNEY

Dec. 31, 1946. R. A. WEAGANT 2,413,396

MULTIPLEX TRANSMISSION SYSTEM

Filed June 13, 1942 3 Sheets-Sheet 3

Fig. 3.

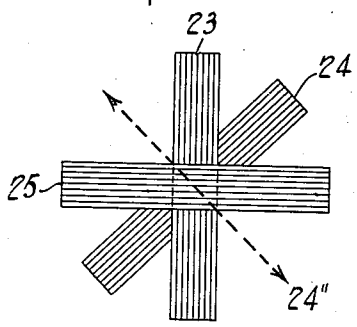

Fig. 4a.

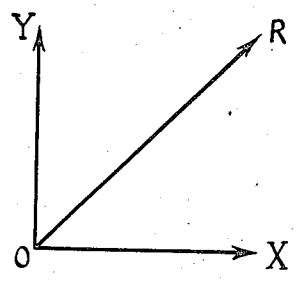

Fig. 4b.

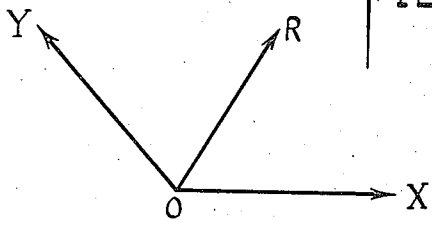

Fig. 5.

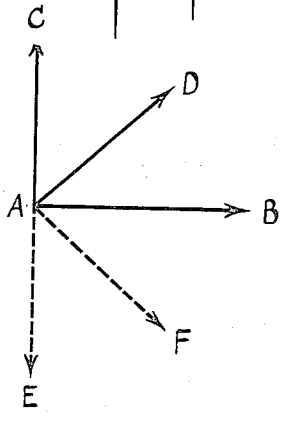

Fig. 4c.

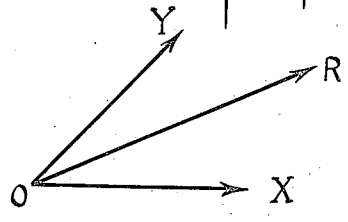

INVENTOR
ROY A. WEAGANT.
BY H. S. Grover
ATTORNEY

Patented Dec. 31, 1946

2,413,396

UNITED STATES PATENT OFFICE

2,413,396

MULTIPLEX TRANSMISSION SYSTEM

Roy A. Weagant, Douglaston, N. Y., assignor to Radio Corporation of America, a corporation of Delaware

Application June 13, 1942, Serial No. 446,857

3 Claims. (Cl. 250—9)

1

My present invention relates in general to multiplex radio communication, and more particularly to a system for securing radio secrecy.

One of the main objects of this invention is to provide a method of, and means for, radio communication wherein a plurality of different types of modulation may be applied to separate carrier components of a common frequency; the carrier components for each type of modulation being in phase quadrature relation.

Another important object is to provide a system for receiving a pair of modulated carrier waves of common frequency but of phase quadrature; the system depending for operation upon the fact that in a balanced detector an exalted carrier in high amplitude will combine with one of the modulated waves to produce maximum modulation voltage provided the modulated wave and exalted carrier are co-phasally related in one rectifier unit and in opposite phase in the opposite rectifier unit.

Another important object of my invention is to provide a method of secrecy radio communication wherein desired intelligence and masking signals separately modulate common carrier energies related in phase quadrature; the desired and masking modulated waves being radiated, and intelligible reception of the desired intelligence being impossible with a conventional known type of amplitude modulation receiver, or a frequency modulation receiver, or a phase modulation receiver.

Yet another object of my invention is to provide a novel and simplified method of military communication, adapted for inter-plane, inter-tank, ship to shore or shore to shore work, wherein a transmitter radiates two amplitude modulated carrier waves of like carrier frequency but phase displaced by 90 degrees; the modulation of one wave being deliberately chosen to mask the desired modulation of the other wave, and the total radiation being capable of proper and intelligible reception by replacing the resultant carrier of the desired modulation components by a highly amplified carrier having a phase the same as that of the desired signal carrier.

Another object of my invention is to provide a highly simplified and efficient form of secrecy radio communication system which is readily adapted to existing amplitude modulation receivers, and which is economically manufactured and assembled.

The novel features which I believe to be characteristic of my invention are set forth with particularity in the appended claims; the invention

2

itself, however, as to both its organization and method of operation will best be understood by reference to the following description taken in connection with the drawings in which I have indicated diagrammatically several circuit organizations whereby my invention may be carried into effect.

In the drawings:

Fig. 1 shows a circuit embodying the transmitter portion of the system,

Fig. 1*a* shows vectorially the relations between the various carrier energies at the receiver,

Fig. 2 shows a circuit embodying the receiver section of the system,

Fig. 3 shows the goniometer construction used in the phase selector at the receiver,

Figs. 4*a*, 4*b*, 4*c* show vectorially the function of the goniometer,

Fig. 5 is a further vectorial analysis of the operation of the phase selector circuit.

Referring, now, to the accompanying drawings, there is shown in Fig. 1 a transmitter system that may be employed to provide the radiations depicted in Fig. 1*a*. Two modulation sources are shown; they can both be sound and only one intelligible. One can be music, while the other may be speech. Furthermore, one source can be noise deliberately produced to mask the desired audible message from the other modulation source. Again, the two sources may be separate broadcast programs desired to be transmitted on a common carrier channel. The carrier energy is provided by a crystal-controlled oscillator 3 of any well known form. The carrier frequency may be in the kilocycle or megacycle ranges. A pair of modulators are provided. Each modulator is fed with carrier energy from source 3, but the energy supplied to one of these modulators is in phase quadrature relative to the other. The modulation signals are separately fed from the sources 1 and 2 to the respective modulators.

While the modulators may be of any desired and known type, there are shown a pair of tubes 4 and 5 of the 802 type as specific examples. The inner control grids of the tubes 4 and 5 are fed with carrier energy. The carrier path to the inner grid of tube 5 includes a phase shifter network 6 which can be adjusted to secure carrier excitation of the modulator tubes in phase quadrature. The modulation source 1 applies its modulation, through an amplifier 7, to the suppressor grid of tube 4. The other modulation source 2 applies its modulation energy, through amplifier 7', to the suppressor grid of modulator tube 5. Assume, for example, that source 1 applies a use-

ful audio signal to modulator tube 4, and that source 2 is a noise generating device. In that case there will be developed in the resonant output circuit 8 of modulator tube 4 audio modulated carrier energy. In the resonant output circuit 9 of modulator 5 there will be developed noise modulated carrier energy. Each of circuits 8 and 9 is tuned to the same carrier frequency.

However, the radiators 8' and 9' of the transmitter will radiate the modulated carrier waves so that the carriers are equal in magnitude but in phase quadrature. There should be enough radiation from these radiators 8' and 9' to energize any properly-designed receiving system in the operating field of the transmitter.

In Fig. 1*a* I have graphically presented a vector representation of the total radiation from the transmitter. Thus, the carrier modulated with "desired" audio signals is pictured as side frequency vectors rotating in opposite senses, and the resultant being always along the line of the carrier. This is similarly true of the "undesired" noise modulated carrier wave. In other words, the radiations from radiators 8' and 9' are simply represented in conventional manner as two amplitude modulated waves of like frequency but phase displaced by 90 degrees. If it is desired to receive solely the desired audio signals, it is only necessary to replace the resultant carrier by a single, highly amplified carrier having a phase the same as that of the desired signal carrier. Such highly amplified carrier, in phase with the desired signal carrier, is represented in Fig. 1*a* as "Injected carrier." The broken sections thereof denote that the vectorial length is many times as great as the vector length of the desired signal carrier.

It can now be seen that such addition of a highly amplified in-phase carrier will cause only the desired audio signals to be produced on detection. This happens, because the noise side frequencies resultant is in quadrature with, and is much smaller than, the new injected carrier. Hence, the undesired resultant vector will affect substantially only the phase of the injected carrier, and not its amplitude so that a simple detection will yield only the desired audio signals. Any other phase of the injected carrier will be subject to amplitude variations by the noise side frequencies. Any type of receiver, whether frequency or phase modulation or amplitude modulation, will yield as much noise as desired signals if the resultant desired carrier is left unaltered in its normal position halfway between the side frequencies as shown in Fig. 1*a*.

The method of separating the desired signals from the noise masking signals is shown in Fig. 2. The receiver system shown therein derives from the received radiation itself the unmodulated carrier energy to be injected into the demodulator circuit at a high amplitude level and in phase quadrature with the carrier of the undesired signal modulated wave energy. The receiver arrangement shown is one that can readily be added to an ordinary amplitude modulation receiver without much change in the already existing parts thereof.

In general, and referring to Fig. 2, the total radiation from the transmitter is collected at 10. The collected energy is amplified in one or more stages of radio frequency amplification at 11. The amplified energy is applied to a first detector 12; it is assumed that the receiver is of the superheterodyne type. A local oscillator 13 beats the received energy down to an intermediate frequency (I. F.) value. The I. F. transformer 14 has its primary and secondary resonant circuits each tuned to the I. F. value. The primary circuit 14' feeds the I. F. energy to a carrier selector network which is a sharply selective amplified operating at the I. F. value. A phase selector is included properly to phase the exalted, or highly magnified, carrier with respect to the phase quadrature carriers. The resulting properly-phased, exalted carrier is then injected into the secondary circuit 14'' of the demodulator, or second detector, of the receiver.

The carrier selector network is a stabilized regenerative circuit, and has been disclosed and claimed in my application Serial No. 397,536, filed June 11, 1941, patented February 23, 1943, as U. S. Patent No. 2,312,139. Since the last named patent describes the circuit and functions of this stabilized regenerative circuit in detail, it is believed that a general description of the regenerative circuit in this application will be sufficient. The tube 15 is provided with an input grid 16, a regenerating grid 17 and a stabilizing grid 18. The input grid 16 is coupled to the high potential side of the resonant primary circuit 14' of the I. F. transformer 14 through the direct current blocking condenser 19. The grid return resistor 20 connects the grid 16 to ground. The cathode of tube 15 may be connected to ground through the usual carrier-bypassed biasing resistor 40.

The regenerating grid 17, which is located within a positive shielding field, is connected to ground through series-connected coils 32 and 33. Each of these coils is independently and adjustably reactively coupled to output circuit coil 21. The coil 21 is arranged in series with a coil 25, and the series coils 21 and 25 are shunted by condenser 30 which resonates the coils to the operating I. F. value. The positive potential for the plate 40' of tube 15 is provided through the coils 25 and 21.

As explained in my last named patent, coils 33 and 21 provide the regenerative feedback coupling from the plate circuit of tube 15. Coil 33 is inductively coupled to coil 21 to provide the required regenerative feedback. The coil 32 is connected in the opposite direction to coil 33, and it functions to neutralize, by means of the coupling 32—21, the effect of inherent feedback between the primary and secondary circuits 14' and 14''. In other words, the coupling 32—21 is degenerative, and exactly neutralizes regenerative coupling between 14' and 14'' due to the regenerative tube 15. The voltage induced in coil 33 will be in exactly opposite phase to the voltage across coil 21 at resonance. All causes of variation in circuit constants will show up in a variation of the transconductance of tube 15. An increase in this quantity will cause oscillation; a decrease will cause the tube to become less regenerative.

Stabilization is secured by a reversely-acting effect provided by grid 18 connected to the high potential side of the resonant circuit 41. The low potential side of circuit 41 is shown connected to ground. Circuits 14' and 41 are loosely coupled, and circuit 41 is resonated to the I. F. value. The effect of grid 18 and its associated tuned circuit 41 is to act in the reverse sense to the regenerative effect. Briefly, it functions automatically to adjust the resonant frequency of the plate circuit 30—21—25 in response to variations in transconductance of tube 15. It will, therefore, be appreciated that tube 15 and its associated circuits provide a regenerative circuit wherein one control electrode provides re-

generative action, and a second control electrode cooperates with the input circuit 14' to provide a reaction effect in the regenerative output circuit. The effect is such as sufficiently slightly to detune the output circuit thereby to prevent oscillation production should the transconductance of the regenerative tube 15 increase for any reason beyond a desired normal operating condition representative of stabilized regeneration.

If desired, the stabilized regenerative amplifier may be replaced by a simple form of regenerative circuit, since I have included in the carrier exaltation path an amplifier 50 which can be relied upon to provide extra I. F. carrier amplification. Hence, the regenerative circuit need not be adjusted to its maximum regeneration point just below oscillation. Further, a crystal-controlled amplifier operating at the I. F. value may be substituted for the regenerative circuit. In this latter case, however, automatic frequency control of the local oscillator may be necessary.

The phase selector device is constructed substantially along the lines of the phase selectivity circuit disclosed in my application serial number 393,532 filed May 15, 1941, patented April 20, 1943 as U. S. Patent No. 2,316,909. The amplifier 50 is provided with a resonant input circuit comprising coil 24 shunted by the resonant condenser 24'. Circuit 24—24' is fixedly tuned to the operating I. F. value. The amplifier 50 is, also, provided with a resonant output circuit 51 which is tuned to the I. F. value. The high potential side of circuit 51 is connected by lead 52 to the junction of the series condensers 53 and 54. The latter are connected in shunt across the resonant input circuit 14'' of the demodulator.

Coil 24 is arranged to be coupled to either of coils 23 or 25. As stated previously, the coil 25 is part of the output circuit of the regenerative tube 15. The coil 23 is arranged in series in a closed link circuit with condenser 23' and coil 23''. The link circuit 23—23'—23'' is resonated to the operating I. F. value. Coils 21 and 23'' are reactively coupled.

In Fig. 3 I have shown a plan view of a goniometer unit embodying coils 23, 24 and 25. Those skilled in the art are fully acquainted with the manner of constructing such a unit. Each of coils 23, 24 and 25 is wound on a square form in the manner of a loop antenna. It will be understood that the coil 24 will be pivoted along a vertical axis so that it can be adjusted into the dotted line position 24'' shown in Fig. 3. The link circuit 23—23'' is loosely coupled to coil 21. The coils 23 and 25 of the goniometer unit are relatively fixed, while the coil 24 is rotatable through an angle of 360 degrees. The adjustable coil 24 is, of course, in the input circuit of the amplifier 50 whose output supplies the exalted I. F. carrier energy to the junction of condensers 53 and 54.

The circuit arrangement involving the goniometer unit is of such a nature that the currents flowing in coils 23 and 25 are in quadrature. The number of turns employed is such that the ampere-turns in each are equal; this signifies that the actual number of turns of coil 25 will be less than that of coil 23. The coil 24 may be rotated to any position relative to the two fixed coils. If it coincides in position with coil 25 the phase of the voltage induced in it will be the same as that of coil 25. Similarly, if its position coincides

with coil 23 the phase of the voltage induced in it will be that of coil 23, which differs from the other coil by 90 degrees. If in the 45 degree position, as shown in Fig. 3, the resultant induced voltage will be at 45 degrees from either of the two fixed coils. It will, therefore, be seen that the goniometer unit provides a smooth and continuous adjustment of the phase angle of the voltage induced in the coil 24.

If we assume, now, that the transmitter is radiating two carriers in quadrature, as represented by the vectors OX and OY of Fig. 4*a*, they will combine to provide a resultant OR. This will be the phase of the current flowing in coil 24. The two components of the resultant carrier OR can be seen from Fig. 4*a* to be at 45 degrees to the resultant. In order that the exalted carrier output may be in phase with either component, it is necessary to provide an exalted carrier whose phase angle is 45 degrees with respect to the resultant OR, and which can also be shifted to two positions 90 degrees apart. If the coil 24 is in the position shown in Fig. 3, then the voltage induced in that coil may be represented by the vector AD of Fig. 5. If, now, the coil 24 is rotated to the position shown by the dotted line 24'' of Fig. 3 the voltage induced in it by coil 24 will reverse, and can be represented by vector AF of Fig. 5 which is at right angles to vector AD. Vectors AE and AF are represented by dotted lines to show that these are the result of adjusting coil 24 to the dotted line position 24''.

As a result of this action it is now apparent that simply rotating the coil 24 to one of the two indicated positions will provide an exalted carrier which will be in phase with either of the two components of the resultant incoming radiation. When so adjusted modulation frequencies due to one component of the carrier will be heard, while those due to the other component will not be heard. Either of the two communications may, therefore, be selected at will. Hence, the coil 24 acts as true phase selector device.

The goniometer phase shifting arrangement has important characteristics. Due to the quadrature relation in time of the currents flowing in the fixed coils 23 and 25, and the quadrature relation in space of the coils themselves, a rotating field of constant amplitude is produced. This means that rotation of coil 24 through the entire 360 degrees will shift the phase of the voltage induced in it through the same 360 degrees without amplitude variation. The coupling between the rotatable coil and fixed coils must be sufficiently loose to prevent appreciable reaction.

Since it is important that the necessary phase relation between the exalted carrier and the signal carrier be secured, the regenerative circuit must be so arranged that, if an ordinary carrier is being received, the relative phases of the two in one detector is the same, while they are opposite on the other detector. That this is accomplished by the present circuit is readily seen when it is considered that the current flowing in the input circuit 14'' of the demodulator is 90 degrees out of phase with the current flowing in the plate circuit of the first detector 12, due to the tuning of each and the loose coupling. The regenerative circuit is connected directly to the output circuit 14' by virtue of the coupling between grid 16 and condenser 19, and, therefore, the currents flowing in the output circuit of the regenerative tube will be in opposite phase. Assume for the moment that a coupling exists between coils 24 and

25 only, then a 90 degrees shift in phase will occur in the tuned circuit 24—24'. This makes the current in the same phase as those applied to the demodulator by the signal input circuit 14'. Since only a reversal of phase takes place in the amplifier 50, the output of this amplifier will be in the right phase for phase detection. The goniometer unit provides the additional element necessary to secure any desired phase relation.

There will now be considered the circuit details of the balanced detector, or demodulator, network. The tuned input circuit includes the series-connected condensers 53 and 54 arranged in shunt to the condenser 55. The tuned input circuit is connected at its opposite ends to the anodes of a pair of opposed diode rectifiers 60 and 61. The coil of circuit 14'' is center-tapped to ground. The electrodes of the opposed diodes may be arranged in a common tube envelope, as in the case of a 6H6 type tube. Of course, they may be located in separate tube envelopes, if desired. The anode of diode 60 is coupled to one side of input circuit 14'' through condenser 62, while the anode of diode 61 is coupled by condenser 63 to the opposite side of the tuned input circuit. The diode anodes are connected to the control grids of a pair of triodes 70 and 71.

The cathodes of the triodes are connected in common to ground, while the plates of the triodes are connected to opposite ends of the primary winding of the audio transformer 80. The midpoint of the transformer primary is connected to a source of positive potential. The control grids of triodes 70 and 71 are connected together by the output resistor 90 of the diode rectifiers. The midpoint of the resistor 90 is grounded, and each section of the resistor 90 is bypassed for I. F. currents. The common cathode connection of diodes 60 and 61 is connected by an adjustable tap 91 to any desired point on the output resistor 90. A choke coil 92 connects the anode of diode 60 to the control grid of triode 70, while a second choke coil 93 connects the anode of diode 61 to the control grid of triode 71.

The demodulator network is balanced by the variable contact 91 which operates on the output resistor 90. The choke coils 92 and 93 function to prevent the radio frequency energy from reaching the grids of triodes 70 and 71. While the latter are shown as being in separate tube envelopes, it is to be understood that they may be located in a single tube envelope as in the case of the well known twin-triode tube. Each of choke coils 92 and 93 is preferably tuned to the operating I. F. value. Each choke coil may comprise a coil with an adjustable iron core, and each coil may be shunted by a fixed condenser for resonating to the I. F. value. If the choke coils are properly adjusted there will be no detection noticeable due to the strong exalted I. F. carrier. In practice it will be found that balancing of the demodulator circuit is facilitated by proper adjustment of the choke coils 92 and 93.

Considering, now, the functioning of the demodulator network, assume that the modulated carrier energy at the signal input circuit and the exalted carrier energy are of the same amplitude and that their phases are alike on one diode and unlike on the other diode. A direct current will be produced through one diode while no direct current will flow through the other diode since the applied voltage is zero. A difference of potential will then exist between the two terminals of the output resistor 90, and it will be of direct current form becoming alternating in character when modulation occurs. If the signal carrier and the exalted carrier are assumed to be in phase quadrature, then the amplitude of the I. F. energy impressed upon the two diodes is equal, and, therefore, the corresponding rectified currents are equal. These rectified currents will flow from the center point of resistor 90 in opposite directions through the load resistors to the two diode anodes. The two ends of the resistor 90 and the grids of tube 70 and 71 will all be at the same potential. When modulation occurs the audio frequency impressed upon the twin-triode grids will produce equal and opposite current flow through the primary winding of transformer 80. The voltage induced in the secondary of this transformer will, therefore, be zero. It will now be seen that when the signal carrier and exalted carrier are in quadrature there is no response from an incoming signal.

Actually the exalted carrier amplitude is of a very much larger magnitude than the signal carrier amplitude. As a result of this highly amplified, injected carrier being applied to the demodulator in phase with the carrier of the desired signal modulated carrier component, and in phase quadrature with the undesired modulated carrier component, there will be response solely due to the desired modulated carrier. As explained previously, this action follows from a consideration of the vector relations shown in Fig. 1*a*. There will, also, be present another effect due to the strong injected I. F. carrier; this effect has been termed by me as a "selective improvement in detector efficiency" and has been described and claimed in U. S. Patent 2,243,141 granted May 27, 1941.

In that patent it has been pointed out how the use of a highly amplified I. F. carrier results in elimination of undesired interfering carrier energy. In the present case the goniometer coil 24 would be adjusted to that setting which would produce minimum noise effects. When the coil 24 is adjusted to that setting, then it would be understood that the exalted carrier energy applied to the demodulator is in phase with the desired carrier component, but is in phase quadrature with the undesired component. It is pointed out that the phase selector network will enhance the tuning selectivity of the exalted carrier circuit. This has been explained in my aforementioned "phase selectivity" Patent No. 2,316,909.

Figs. 4*a*, 4*b* and 4*c* indicate the action due to phase selectivity. When the two currents in the goniometer are in quadrature the resultant induced voltage in the secondary circuit 24—24' is indicated by vector OR of Fig. 4*a*. This is the situation for the signal carrier frequency. For a carrier lower in frequency than the signal, the capacity reactance exceeds the inductive reactance and the currents in coil 23 will lead that in coil 25 by a greater angle. This angle is XOY in Fig. 4*b*, and the resultant OR will be at a different angle from OX. Since the angle ROX of Fig. 4*a* represents the angle of maximum efficiency of detection, the same angle of Fig. 4*b* will be an angle which is less efficient.

The amplitude of OR will also be less, and the amplitude of the interfering carrier will be reduced by two factors. On the other hand if the interfering carrier is higher in frequency than the signal carrier, the inductive reactance will exceed the capacity reactance and the current in the circuit 24—24' will be retarded in phase.

This is represented by OY of Fig. 4c. This is a less advantageous angle, and will shift the resultant OR correspondingly. The amplitude of OR, however, will increase, and the two effects will about offset each other. The action of the phase selectivity network will be to make the circuit more selective for frequencies lower than the signal carrier, while not affecting carriers higher than the signal frequency.

The present system has many uses, as will be appreciated from the above description. Not only is it of value in its ability to double the number of possible communications in the entire radio spectrum, but a simplified secrecy system of communication is provided. The present secrecy system of communication is difficult to analyze. In the past it has been customary to employ code for general military purposes. Coding and decoding take time, and require especially trained personnel. A radio communication system which can be used by relatively unskilled personnel is more effective, and can be secured by the employment of the present system.

In actual use one modulation channel will be used for providing the actual communication, while the other will be some sort of electromechanical device producing the worst type of noise. Both the real and dummy transmission will be received by many receivers by equal intensity in so far as the carrier is concerned, but with the modulation on the interfering channel always at a maximum. This will result in rendering the significant communication useless to the enemy. Communication can thus be readily provided between general headquarters and fighting units anywhere in the field, as well as between units in the field. The system is particularly adapted to communication between naval and air units, and as well as between ship to short units.

Much of the present day radio telegraph communication is carried on by high speed with automatic transmitters operated by moving tapes. When conditions are bad, interruptions occur due to static and fading. Under these circumstances both channels of the dual transmission system here disclosed may be employed, the tapes being staggered so that any disturbance which occurs cuts out in a different part of the communication. Missing words on one will be found on the other. This is equivalent to two ordinary channels, but has the advantage that it occupies only one channel space in the ether.

In connection with secrecy communication, noise can be placed on the desired signal channel itself until the receiving operator reports that the signal is just completely understandable. The noise channel is then operated and the enemy will receive noise due to both channels, which will probably so completely bury the signal that it will be entirely unintelligible. However, the receiver of the present system will find communication intelligible. Should any unauthorized listener, such as the enemy, attempt to analyze the system, he will find that operation with a frequency modulation receiver or a phase modulation receiver will not be effective. It is desirable to provide a sensitivity control in the receiver at some point prior to transformer 14. The purpose of this control is to permit a reduction of the signal value to a very small absolute value. This adjustment will reduce all strong signals to the desired low level.

While I have indicated and described several systems for carrying my invention into effect, it

will be apparent to one skilled in the art that my invention is by no means limited to the particular organizations shown and described, but that many modifications may be made without departing from the scope of my invention, as set forth in the appended claims.

What I claim is:

1. In a secrecy radio communication system, the method which includes modulating high frequency carrier energy with one type of modulation representative of desired intelligence, modulating high frequency energy of the same carrier frequency, but in phase quadrature with the first named carrier energy representative of a masking signal, with a different type of modulation, transmitting the modulated energies as separate modulated carrier waves, collecting the transmitted energies, producing from the latter substantially unmodulated energy of said carrier frequency, increasing the amplitude of the local energy to a relatively high level with respect to the amplitude level of said transmitted energies, combining the transmitted energies and said high amplitude level energy in such phase relation that the local energy is in phase with the intelligence-modulated carrier component of said transmitted energies, but is in phase quadrature with the second carrier component, and demodulating the combined energies thereby to produce solely the modulation on the in-phase carrier component.

2. A secrecy radio receiving system of the type adapted to receive radiated wave energy which is composed of a pair of carrier components of like frequency but in phase quadrature, and wherein the components are respectively modulated by desired and undesired signals, a demodulator network comprising a pair of opposed diodes having a common input circuit and a common output circuit, a sharply selective network operating at the frequency of said carrier components, said selective network having an input circuit coupled to said receiver input, a phase selector network, coupled to said selective circuit, constructed and arranged so as to adjust the phase of the output of said selective circuit to be in phase with that one of said carrier components which is modulated by desired signals and in phase quadrature with the other carrier component, and means for applying the output of said phase selector to said demodulator input circuit at such a high amplitude level that solely said desired signals are produced.

3. A receiving system of the type adapted to receive radiated wave energy which is composed of a pair of carrier components of like frequency but in phase quadrature, and wherein the components are respectively modulated by signals of different character, a demodulator network comprising a pair of opposed rectifiers having a common input circuit, a sharply selective regenerative amplifier network operating at the frequency of said carrier components, said selective network having an input circuit coupled to said receiver input, a phase selector network coupled to said selective circuit, said phase selector being constructed and arranged so as to adjust the phase of the output of said selective circuit to be in phase with one of said carrier components and in phase quadrature with the other component, and means for applying the output of said phase selector to said demodulator input circuit at such a high amplitude that solely the modulation signals on the in-phase carrier component are produced.

ROY A. WEAGANT.