(12) INTERNATIONAL APPLICATION PUBLISHED UNDER THE PATENT COOPERATION TREATY (PCT)

(19) World Intellectual Property Organization
International Bureau

(43) International Publication Date
14 August 2008 (14.08.2008)

PCT

(10) International Publication Number
WO 2008/096157 A1

(51) International Patent Classification:
F24H 3/06 (2006.01) *F24D 5/12* (2006.01)
E04B 5/48 (2006.01) *F24D 11/02* (2006.01)
F24D 3/12 (2006.01) *F24F 5/00* (2006.01)
F24D 5/02 (2006.01) *F28D 20/02* (2006.01)

(21) International Application Number:
PCT/GB2008/000452

(22) International Filing Date: 8 February 2008 (08.02.2008)

(25) Filing Language: English

(26) Publication Language: English

(30) Priority Data:
0702527.3 9 February 2007 (09.02.2007) GB

(71) Applicant *(for all designated States except US)*: **TARMAC LIMITED** [GB/GB]; Millfields Road, Ettingshall, Wolverhampton WV4 6JP (GB).

(72) Inventor; and

(75) Inventor/Applicant *(for US only)*: **RUSSELL-SMITH, Geoffrey** [GB/GB]; Tarmac, Weston Underwood, Derby DE6 4PH (GB).

(74) Agent: **FORRESTER KETLEY & CO.**; Chamberlain House, Paradise Place, Birmingham B3 3HP (GB).

(81) Designated States *(unless otherwise indicated, for every kind of national protection available)*: AE, AG, AL, AM, AO, AT, AU, AZ, BA, BB, BG, BH, BR, BW, BY, BZ, CA, CH, CN, CO, CR, CU, CZ, DE, DK, DM, DO, DZ, EC, EE, EG, ES, FI, GB, GD, GE, GH, GM, GT, HN, HR, HU, ID, IL, IN, IS, JP, KE, KG, KM, KN, KP, KR, KZ, LA, LC, LK, LR, LS, LT, LU, LY, MA, MD, ME, MG, MK, MN, MW, MX, MY, MZ, NA, NG, NI, NO, NZ, OM, PG, PH, PL, PT, RO, RS, RU, SC, SD, SE, SG, SK, SL, SM, SV, SY, TJ, TM, TN, TR, TT, TZ, UA, UG, US, UZ, VC, VN, ZA, ZM, ZW.

(84) Designated States *(unless otherwise indicated, for every kind of regional protection available)*: ARIPO (BW, GH, GM, KE, LS, MW, MZ, NA, SD, SL, SZ, TZ, UG, ZM, ZW), Eurasian (AM, AZ, BY, KG, KZ, MD, RU, TJ, TM), European (AT, BE, BG, CH, CY, CZ, DE, DK, EE, ES, FI, FR, GB, GR, HR, HU, IE, IS, IT, LT, LU, LV, MC, MT, NL, NO, PL, PT, RO, SE, SI, SK, TR), OAPI (BF, BJ, CF, CG, CI, CM, GA, GN, GQ, GW, ML, MR, NE, SN, TD, TG).

Published:
— *with international search report*
— *before the expiration of the time limit for amending the claims and to be republished in the event of receipt of amendments*

(54) **Title:** A METHOD OF CHANGING THE TEMPERATURE OF A THERMAL LOAD

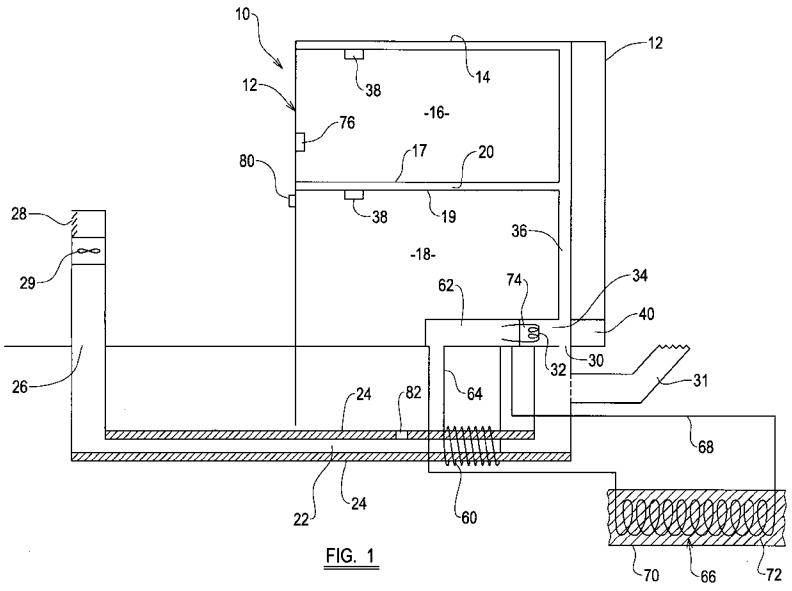

FIG. 1

(57) **Abstract:** A method of changing the temperature of a thermal load (20) including the steps of passing ambient air at a first temperature through a duct (22) at a second, ground, temperature where heat is exchanged between the passing air and the duct (22) to pre-treat the passing air by modifying the temperature of the passing air, providing a phase change material (24) in the duct (22) which undergoes a phase change within a predetermined temperature range, thermally contacting the passing air with the phase change material (24) whereby heat is exchanged between the passing air and the phase change material (24) to change the latent heat of the phase change material (24), and subsequently passing the air to the thermal load (20) to exchange heat with the thermal load (20).

WO 2008/096157 A1

A Method of Changing the Temperature of a Thermal Load.

Description of Invention

The present invention relates to a method of changing the temperature of a thermal load.

Modern building structures are often constructed using pre-formed structural elements such as beams, panels or floor slabs of concrete or similar material having a high thermal mass. As a result, the structures can absorb a large amount of energy, for example solar energy or heat emitted by occupants of, or equipment contained within, the structures. This can lead to interiors of such structures becoming uncomfortably warm, as the material emits the heat absorbed over a period of time. There is thus a need to cool the interior of such structures, and this can be achieved by natural ventilation or by using air conditioning systems, which circulate cooled air, for example through ducts within the structure interior. Such systems, however, use a considerable amount of energy, which may not meet increasingly stringent energy efficiency requirements imposed in relation to new structures.

It is known to pre-treat ambient external air to be used for ventilating a building structure by passing the air through a subterranean duct, to cool or heat the air, depending upon the ambient air temperature and the temperature of the ground in which the duct is located. However, this only provides a limited amount of pre-treatment of air, and thus additional components such as heat exchangers may be required to cool or heat the air to a suitable temperature for cooling or heating the building.

According to a first aspect of the present invention, there is provided a method of changing the temperature of a thermal load including the steps of passing

ambient air at a first temperature through a subterranean duct at a second, ground, temperature where heat is exchanged between the passing air and the duct to pre-treat the passing air by modifying the temperature of the passing air, providing a phase change material in the duct which undergoes a phase change within a predetermined temperature range, thermally contacting the passing air with the phase change material whereby heat is exchanged between the passing air and the phase change material to change the latent heat of the phase change material, and subsequently passing the air to the thermal load to exchange heat with the thermal load.

The term "phase change material" refers to a material which has a high latent heat capacity, that is to say a material which is capable of storing or releasing a large amount of heat energy when changing from one phase (solid, liquid or gas) to another. The use of phase change material in the duct increases the amount of heat that can be exchanged between the passing air and the duct, thus increasing the temperature change undergone by the passing air. In this way, the passing air can be pre-cooled or pre-heated so as to be closer to a temperature suitable for changing the temperature of the thermal load, and thus the capacity of additional components, such as fans or heat exchangers, required to effect a change of the temperature of the thermal load can be minimised, which leads to a reduction in the amount of energy required to change the temperature of the thermal load to a desired temperature.

The subterranean duct is preferably embedded in an upper ground layer at a depth greater than 1.5 metres. At such a depth, the subterranean duct is not subject to diurnal fluctuations in the temperature towards an upper surface of the upper ground layer. The subterranean duct may be embedded in the upper ground layer at a depth of between 5.5 and 7.5 metres. By embedding the subterranean duct in the upper ground layer, at a depth of between 5.5 metres and 7.5 metres, the temperature difference between the upper ground layer and the ambient air can be used to assist the pre-treatment of the

passing air, for example by cooling it when the ambient air temperature is higher than the upper ground layer temperature.

The pre-treated air may be further cooled or heated prior to being passed to the thermal load, to change its temperature to a temperature suitable for changing the temperature of the thermal load.

The thermal load may be a structural element of a structure such as a building. By using the method of the invention, at least to pre-treat the air, the temperature of the structural element can be changed and hence, the temperature within the building can be more efficiently changed to bring the temperature within the building to a desired temperature.

The structural element may be provided with internal channels, and the method may include passing air which was pre-treated though the internal channels. In this way, the temperature changing effect of the air on the structural element is maximised, as heat can be exchanged between the structural element and the pre-treated air passing through it. Additionally, the use of such a structural element in a building reduces the amount of additional ducting required to direct air around the building.

Where the thermal load is cooled by the pre-treated air, heat may be reclaimed from the air after the air is heated by the thermal load, for example before the air is exhausted from the structure, so as to improve the energy efficiency of the method.

The method may further include the steps of providing a first ground loop, part of which passes through or closely adjacent a wall of the subterranean duct, for transferring heat from or to the subterranean duct, and passing a heat exchange material through the first ground loop to transfer heat from or to the

subterranean duct, thus to change the latent heat of the phase change material.

The method may further include the steps of providing a second ground loop, part of which is embedded in the upper ground layer or a lower ground layer, at a depth below the upper ground layer, and passing a heat exchange material through the second ground loop, to transfer heat from or to the heat exchange material of the first ground loop, thus to provide additional heating or cooling of the subterranean duct.

According to a second aspect of the present invention, there is provided an apparatus for changing the temperature of a thermal load, the apparatus including a subterranean duct having an inlet for ambient air, the duct including phase change material whereby in use heat is exchanged between ambient air passing through the duct and the phase change material to change the temperature of the air, the apparatus further having an outlet through which the temperature-changed air may be passed towards the thermal load.

The subterranean duct is preferably embedded in an upper ground layer at a depth of more than 1.5 metres. The subterranean duct may be embedded in the upper ground layer at a depth of between 5.5 and 7.5 metres.

The thermal load may be a structural element of a structure such as a building structure, which structural element may be provided with internal channels through which air can pass.

An ambient air inlet which communicates with the air inlet of the subterranean duct is preferably provided on or near a North-facing wall of the structure.

The ambient air inlet is preferably positioned at a height sufficiently far above ground level to minimise the amount of atmospheric pollution that enters the

subterranean duct through the inlet, and to minimise heating of the ambient air by the ground.

Thus, the ambient air inlet may be positioned at a height of approximately 3 metres above the ground, for example.

Additionally or alternatively, the ambient air inlet may include a filter to filter air entering the subterranean duct.

A fan may be provided to assist air in passing through the subterranean duct. This allows a rate of airflow through the subterranean duct to be varied, so as to change the rate of heat exchange between the air and the subterranean duct.

The outlet of the subterranean duct may communicate with an air handling unit of the structure.

The air handling unit may be a part of an air distribution system which is operative to provide the air from the outlet of the subterranean duct to an interior of the structure.

The air handling unit may include an air cooler or heater to cool or heat, respectively, the air from the outlet of the subterranean duct before the air is provided to the interior of the structure. Thus, additional heating or cooling of air can be provided as necessary, to attain a desired temperature within the structure.

The apparatus may include a bypass outlet from the subterranean duct, through which outlet air can escape to an exterior of the structure. This can be used to aid night time cooling of the subterranean duct in certain temperature

conditions or to divert pre-treated air which is hotter than the structure, where it is desired to maintain the structure cooler.

The phase change material may be provided on an inner wall of the subterranean duct, and the inner wall may have an uneven surface.

Additionally or alternatively, the phase change material may be mounted on one or more structures within the subterranean duct. For example, the phase change material may be provided on one or more free-standing, generally upright supports provided on a floor of the subterranean duct, and/or on at least one formation projecting from a wall, floor or ceiling of the subterranean duct.

The phase change material may be provided in a variety of different forms, but in one example is provided in a plurality of individual capsules, which may be substantially spherical.

The capsules may each have a diameter of approximately 5mm.

The phase change material may be removably attached to the subterranean duct to facilitate installation and maintenance of the phase change material. For example, the subterranean duct may include hooks for the removable attachment of phase change material. Alternatively, the subterranean duct and the phase change material may each be provided with one of a pair of matching profiles so that the phase change material can be attached to the subterranean duct in a push-fit arrangement.

As the cooling and heating requirements of the thermal load may vary according to, for example, climatic conditions, it is important that the phase change material is able to provide a useful contribution to changing the temperature of the passing air in varying conditions. However, optimal heat

exchange between the phase change material and the passing air is not possible under all circumstances, and thus the choice of phase change material is a climatic condition compromise. It is necessary to choose a phase change material which changes phase at a temperature, or within a temperature range, appropriate to effect a desired change in the temperature of the passing air in a variety of conditions.

For example, for a particular location (the UK) using summertime ambient air temperature levels and ground temperatures at a selected depth, it has been determined that using a phase change material in the subterranean duct which changes phase at a temperature of approximately 14°C is particularly suitable. Such a phase change material may be sodium sulphate, as this has a phase change temperature of approximately 14°C.

A phase change material which changes phase at approximately 14°C is an acceptable compromise, in the particular location, between the need to absorb heat from the passing air when cooling of the thermal load is required, for example during summer months, and the ability of the ground to absorb heat from the phase change material, thus to regenerate the phase change material. During warm periods such as summer, when the day time ambient air temperature can be considerably higher than the upper ground layer temperature, at least at the depth at which the subterranean duct is located, and thus the temperature of the subterranean duct, the temperature of ambient air passing through the duct in contact with the phase change material may be above 14°C. A heat exchange process between the passing air and the phase change material causes the latent heat of the phase change material to increase, which eventually causes the phase change material to change phase, for example a normally solid phase change material melts, with the phase change material thus absorbing heat from the passing air without a rise in the temperature of the phase change material, at least until the phase change material changes phase.

After the phase change material has changed phase, whilst still at a temperature below the temperature of the ambient air, it will still absorb heat from the passing air, but the temperature of the phase change material will increase. There is therefore a need to cool the phase change material to below the temperature at which it changes phase, to regenerate it, so that it is again able to absorb heat by changing phase. The upper ground layer may be at a lower temperature than the subterranean duct and the phase change material, and thus in these conditions the upper ground layer is able to absorb heat from the subterranean duct and phase change material, cooling them and permitting regeneration of the phase change material.

In some circumstances, the temperature difference between the upper ground layer and the subterranean duct and phase change material may be insufficient fully to regenerate the phase change material. In these circumstances, it is possible to take advantage of the diurnal variation in the ambient air temperature to assist in cooling the subterranean duct and phase change material, thus assisting in regenerating the phase change material.

By passing ambient air through the subterranean duct during the night, if the night time ambient air temperature is below the phase change temperature of the phase change material, the phase change material can be cooled to below its phase change temperature, causing a change of phase, in this example solidifying, to regenerate the phase change material.

The temperature of the upper ground layer changes in response to longer-term changes in the ambient air temperature. As the upper ground layer acts as a heat sink, there is a lag between a change in the ambient air temperature and a corresponding change in the upper ground layer temperature, at least at the depth at which the subterranean duct is provided. Thus, during cold periods, the upper ground layer temperature is often higher than the ambient air

temperature. In these conditions, as the phase change material is at approximately the same temperature as the upper ground layer, the passing air can absorb heat from the phase change material so that the pre-treatment of the air, is warming the air.

A first ground loop may be provided and may be associated with a ground source heat pump which is operative to effect circulation of a heat exchange fluid around the first ground loop, wherein part of the first ground loop passes through or closely adjacent a wall of the subterranean duct, for transferring heat from or to the subterranean duct.

Preferably, the part of the first ground loop includes a conduit which is embedded in or integral with the wall of the subterranean duct at a position adjacent the phase change material, to facilitate heat transfer between the conduit and the phase change material to change the temperature of the phase change material.

A second ground loop may be provided and may be associated with the ground source heat pump, the ground source heat pump being operative to effect circulation of a heat exchange fluid around the second ground loop, wherein part of the second ground loop includes a conduit which is embedded in the ground, for transferring heat from or to the ground.

The ground source heat pump may include a condenser and an evaporator, the condenser being associated with the first ground loop and the evaporator being associated with the second ground loop, such that heat removed from the subterranean duct can be transferred to the ground.

Preferably, the function of the ground source heat pump is reversible, such that heat can be removed from the ground and transferred to the subterranean duct.

In order to be able efficiently to transfer heat from the ground to the subterranean duct, the conduit of the second ground loop must be embedded in the ground at a location sufficiently distant from the subterranean duct that the temperature of the subterranean duct, for example as it is heated or cooled, does not affect the temperature of the ground in which the conduit of the second ground loop is embedded.

The conduit of the second ground loop may be embedded in a trench in the upper ground layer. Alternatively, the conduit of the second ground loop may be embedded in a borehole which extends into the lower ground layer.

The conduit of the second ground loop may be formed into loops, coils or a spiral, to maximise the surface area available between the conduit of the second ground loop and the ground.

Where the conduit of the second ground loop is embedded in a borehole, it is preferable for the depth of the borehole to be at least 15 metres. At depths greater than 15 metres, the lower ground layer temperature is substantially unaffected by the ambient air temperature, and thus a temperature difference will usually exist between the part of the second ground loop and the subterranean duct, thus permitting heat transfer between the lower ground layer and the subterranean duct, and thus the phase change material.

The conduit of the second ground loop may be embedded in additional phase change material, which may be provided in the trench or borehole, to improve the cooling or heating effect of the second ground loop, as the additional phase change material can act as a source or sink of heat.

According to a third aspect of the present invention, there is provided a method of selecting a suitable phase change temperature for a phase change

material for use in a method according to the first aspect of the invention, including the steps of determining an average ambient air temperature at a location of the subterranean duct at selected intervals over a period of time, determining a corresponding average upper ground layer temperature at the location of the subterranean duct at the selected intervals over the period of time, selecting an interval in which the maximum or minimum average ambient air temperature occurs, and adding one half of the difference between the average ambient air temperature and the corresponding average upper ground layer temperature to the average upper ground layer temperature in the selected interval.

According to a fourth aspect of the present invention, there is provided a duct for subterranean installation, through which ambient air at a first temperature can pass to modify the temperature of the passing air, wherein phase change material is attachable to the duct.

The invention will now be described, by way of example only, with reference to the accompanying figures, of which

FIGURE 1 is a schematic view of a building structure which uses the method of the present invention;

FIGURE 2 is a schematic cross-sectional view along of part of the structure illustrated in Figure 1;

FIGURE 3 is a more detailed illustration of the section shown in dashed outline in Figure 2;

A method of changing the temperature of a thermal load in accordance with the present invention is used in the building structure shown generally at 10 in Figure 1. In this example, the thermal load is a structural element 20 of the

structure 10, which is of generally conventional construction, being built on underground foundations (not shown) and having walls 12 and a roof 14. The walls 12 may be of brick or block construction, but in a preferred embodiment are constructed using pre-fabricated slabs of concrete or another suitable material. In this example, the structure 10 is divided into upper and lower floors or storeys 16, 18 using a pre-fabricated structural element 20 of concrete or a similar material which forms a floor 17 of the upper storey 16 and a ceiling 19 of the lower storey 18.

A subterranean duct 22 is provided in an upper ground layer in the vicinity of the structure 10. The location of the duct 22 is chosen so as to minimise the effect of the structure 10 on the temperature of the upper ground layer surrounding the duct 22. Phase change material (PCM) 24 such as sodium sulphate is included along at least part of the length of the duct 22. The PCM 24 may be provided as a continuous layer, extending over substantially the whole of an inner surface of the duct 22, although it is preferred that the PCM 24 is encapsulated in a plurality of individual containers, as is explained in more detail below. Alternatively, the PCM 24 may be embedded in the inner surface of the subterranean duct, although this arrangement may be less effective, in terms of heat transfer, than a separate layer of PCM 24.

The duct 22 has an inlet 26 at one end, which is in fluid communication with an ambient air inlet 28, to allow ambient air to enter the duct 22. A fan 29 may be provided in the ambient air inlet 28 or in the duct 22 to assist the flow of ambient air through the duct 22.

Where the method is to be used for pre-cooling of ambient air, it is preferred that the ambient air inlet 28 is positioned away from the structure 10, for example 20 metres away from the structure 10. If such spacing of the inlet 28 from the structure 10 is not practicable, the inlet 28 may be positioned on a North-facing wall of the structure 10, so as to be shaded from the sun. This

reduces the amount of solar heating that air entering the duct 22 through the ambient air inlet 28 undergoes. The ambient air inlet 28 is preferably positioned at a height sufficiently far above ground level to minimise the amount of atmospheric pollution that may enter the duct 22 through the ambient air inlet 28, for example 3 metres above ground level. An additional advantage of providing the ambient air inlet 28 at this height is that the temperature of ambient air at this height is not significantly affected by the temperature of the ground on which the structure 10 stands. Thus, a temperature difference exists between the ambient air entering the ambient air inlet 28 and the ground on which the structure 10 stands. The ambient air inlet 28 may be provided with a filter to filter ambient air entering the duct 22 through the ambient air inlet 28.

The duct 22 has an outlet 30 which is in fluid communication with a main air handling unit (AHU) 32, which is part of an air distribution system which is operative to control the flow of air around an interior of the structure 10. In this example the AHU 32 is provided within the structure 10, although the AHU 32 can be external to the structure 10.

An outlet 34 of the AHU 32 is in fluid communication with one or more circulation ducts 36, to circulate air around the interior of the structure 10. The AHU 32 includes a pump, fan or similar air distribution system to assist in circulating air around the interior of the structure 10 through the circulation ducts 36. The AHU 32 may also include an apparatus for further treating pre-treated air entering the AHU 32 from the subterranean air duct 22 before the air is circulated around the interior of the structure 10. For example, a heat exchanger or a separate heater or cooler may be included to heat or cool the pre-treated air entering the AHU 32.

Air circulated through the circulation ducts 36 is able to enter the interior of the structure 10 through outlets such as diffusers 38 which are provided, for

example, in floors and/or ceilings of the structure 10. In this way, the interior of the structure 10 can be cooled or heated as required.

In a preferred embodiment, the structural element 20 which forms the floor of the upper storey 16 and the ceiling of the lower storey 18 is formed with enclosed channels which communicate with the circulation ducts 36 and with the diffusers 38, to direct air circulating in the circulation ducts 36 towards the diffusers 38.

The use of a structural element 20 which is formed with enclosed channels reduces the amount of ducting required to circulate air around the structure 10, as the enclosed channels replace sections of ducting which would otherwise be required to connect the diffusers 38 to the circulation ducts 36. This increases the amount of usable space available within the structure 10, whilst also simplifying the construction and maintenance of the structure 10, thus reducing the costs involved in doing so.

Additionally, the use of such a structural element 20 permits flexibility in positioning the diffusers 38, as a diffuser 38 can be connected to a channel of the structural element 20 by drilling a hole in an upper surface of the structural element 20 above the channel (if the diffuser 38 is to be floor-mounted) or a lower surface of the structural element 20 below the channel (if the diffuser 38 is to be ceiling-mounted) and positioning the diffuser 38 over the hole.

As the structural element 20 is made from a material such as concrete having a high thermal mass, the structural element 20 stores heat, which is released over a period of time, causing heating of the interior of the structure 10. This may be undesirable in periods of hot weather, for example. By providing enclosed channels within the structural element 20, the structural element 20 itself can be cooled by passing cooler air through the channels, thus reducing the amount of heat stored by the structural element 20.

Air provided to the structure 10 through the circulation ducts 36 and the diffusers 38 is in this example returned to the AHU 32 through a system (not shown) of air inlets and ducts in a generally conventional manner. The air returned to the AHU 32 may be directed through a thermal wheel 40, to reclaim heat from the air before it is exhausted to an exterior of the structure 10.

The duct 22 permits air passing through it to be pre-treated by being cooled or heated before it reaches the AHU 32, depending upon the ambient air temperature and the temperature of the duct 22, thus reducing the amount of cooling or heating required before the air is circulated around the interior of the structure 10. This pre-treatment of the air is achieved by heat transfer between the duct 22 and the air passing through it, and in particular by heat transfer between the PCM 24 and the air passing through the duct 22, to pre-cool or pre-heat the air.

In order to achieve a desired temperature changing effect, a PCM 24 which changes phase at an appropriate temperature must be selected. The choice of the PCM 24 is influenced by the climatic conditions in the location at which the structure 10 is situated, as explained below.

Over the course of a period of time, for example a year, the temperature of ambient air varies, for example depending upon the amount of solar heating the ambient air undergoes. The ambient air temperature also varies diurnally, usually being higher during the day than during the night. This diurnal variation in ambient air temperature can be advantageous, as it allows the PCM 24 to be regenerated overnight, as explained in more detail below.

The temperature of the upper ground layer also varies over time, changing in accordance with changing ambient air temperature, with there being a

significant seasonal variation in the upper ground layer temperature, and a less pronounced diurnal variation the further from an upper surface of the upper ground layer. As the upper ground layer has a high thermal mass, it acts as a store of heat, and as a consequence there is a noticeable lag between a change in ambient air temperature and a corresponding change in upper ground layer temperature. An effect of this is that the upper ground layer temperature is usually lower than the ambient air temperature during summer, but higher than the ambient air temperature during winter. The ground temperature also varies according to the depth at which it is measured, although at depths greater than about 15 metres, the ambient air temperature has a negligible effect on the ground temperature. To best exploit this seasonal lag in the upper ground layer temperature, which allows the duct 22 and the PCM 24 to provide both pre-cooling and pre-heating of the passing air, depending upon the prevailing climatic conditions, the subterranean duct should (in the UK) be located in the upper ground layer at a depth greater than 1.5 metres. At such a depth, the subterranean duct is not subject to diurnal fluctuations in the temperature towards an upper surface of the upper ground layer. The duct 22 is preferably located in the upper ground layer at a depth of between 5.5 and 7.5 metres. Locating the duct 22 at such a depth also reduces the effect of diurnal changes in the upper ground layer temperature, as such diurnal changes only occur towards the upper surface of the upper ground layer, typically at depths less than 0.5 metres. Where only pre-cooling of the passing air is required, the duct 22 can be located at a depth of 15 metres or more, although the costs involved in digging to such a depth may be high.

As the duct 22 is embedded in the upper ground layer, at a depth of less than 15 metres, the temperature of the duct 22 and the PCM 24 normally differs from the ambient air temperature. As the chosen depth of the duct 22 approaches 15 metres, the temperature of the upper ground layer around it varies little, and any temperature advantages gained by embedding the duct

22 at a greater depth are likely to be offset by the higher costs involved in digging to such a depth.

The type of earth in which the duct 22 is embedded will have a significant effect on the performance of the system. Where the duct 22 is primarily for pre-cooling, a highly moisture absorbent earth is advantageous. A suitable material is blast furnace slag, for example, which holds approximately 4% to 8% moisture.

The surface coating of the earth in which the duct 22 is embedded will also affect the performance of the system. For example, the use of white pigmented, highly reflective asphalt would be advantageous in pre-cooling applications.

Referring now to Figure 2, there is shown a schematic cross-sectional view of the duct 22 of Figure 1, which is a tunnel large enough to allow access by a workman. Walls 50 of the duct 22 are formed from a rigid material such as concrete, and may be provided in pre-fabricated sections. An inner surface 52 of each of the walls 50 is provided with a layer of PCM 24, which may be a continuous layer of paint or similar material, for example a foil layer having a thickness of approximately 10mm. However, phase change materials perform well in terms of energy storage per unit volume when encapsulated in small containers, since this provides a maximum surface area for heat exchange. Therefore it is preferred that the PCM 24 is provided as a plurality of individual capsules 54 (as shown in Figure 3), which can be attached to the inner surfaces 52 of the walls 50 using hooks or adhesive. Alternatively, the capsules 54 and the inner surface 52 are each provided with one of a pair of matching profiles, which cooperate to attach the capsules 54 to the inner surface. Of course, any other convenient means of attachment may be used. The capsules 54 are preferably substantially spherical in shape, with a diameter of around 5mm. For ease of installation, a plurality of such capsules

54 may be provided in a substantially planar sheet of thermally-conductive material, with the sheet being attachable to the inner surface 52 of the wall 50. Alternatively, the capsules 54 may be contained in resin-filled panels or pouches which are attachable to the inner surface 52 of the wall 50. Such arrangements facilitate maintenance and repair of the layer of PCM 24, as in the event of a fault, an individual sheet, panel or pouch of capsules 44 can be replaced.

Additionally or alternatively, one or more free-standing supports may be provided on a floor of the duct 22. The supports may resemble Christmas trees, each having a substantially central trunk, supporting a plurality of outwardly projecting branches, with the trunk and branches being provided with phase change material, either as a continuous layer or in the form of a plurality of capsules. Such formations may additionally or alternatively be attached to the walls 50 and/or a ceiling of the duct 22, with the trunk and branches projecting towards an interior of the duct 22.

To maximise heat transfer between the capsules 54 and the walls 50, the inner surfaces 52 of the walls are uneven. This encourages air passing through the duct 22 to flow around the capsules 54, and creates turbulence in the air flowing around the capsules 54, which increases the efficiency of heat exchange between the capsules 54 and the air.

An alternative arrangement for the provision of phase change material, is to provide one or more substantially planar fins which extend from the walls 50 of the duct 22. These fins are advantageously arranged so as to subtend an angle of approximately 40° to the walls 50 and/or the ceiling, such that air is directed towards the walls 50, to create turbulence in the air flowing through the duct 22.

Providing formations on the walls 50 of the duct 22 also effectively increases the surface area of the walls 50, therefore heat energy is more readily radiated from or absorbed by the walls 50.

Providing the PCM in a manner in which the walls 50 are not completely coated by the PCM, reduces the insulating effect of the PCM on the walls 50.

To provide a desired temperature change effect on ambient air passing through the duct 22, it is necessary to select a PCM 24 which can absorb heat from ambient air passing through the duct 22 when the ambient air temperature is higher than a desired temperature of the structural element 20, but which can also surrender heat to ambient air passing through the duct 22 when the ambient air temperature is lower than a desired temperature of the structural element 20.

Maximum heat exchange between the passing air and the PCM occurs when the temperature difference between the passing air and the PCM 24 is greatest. However, the PCM 24 is most effective at absorbing or surrendering heat without changing temperature itself when the temperature of the passing air is within the temperature range within which the PCM changes phase. A suitable PCM can be selected by determining the optimum temperature at which the PCM changes state according to the method described.

However, as both the upper ground layer temperature and the ambient air temperature vary over time, the temperature of air passing through the duct 22 also varies over time, and thus it is not possible to select a PCM 24 which will provide an optimum heat exchange between the PCM 24 and the air passing through the duct 22 in all conditions.

As a compromise, the PCM 24 may be selected so as to provide a maximum of heat exchange between the PCM 24 and the air passing through the duct

22 when the need is greatest. For example, as the monthly average ambient temperature in the UK is highest in August, maximum cooling of the air passing through the duct 22 into the AHU 32 may be required during that month. The PCM 24 may thus be selected to provide maximum heat exchange between the PCM 24 and the air passing through the duct 22, when the ambient air temperature is at the level reached during the day time in August. However, heating of the air passing through the duct 22 is also possible using PCM 24 so selected, by heat transfer from the PCM 24 to the air passing though the duct 22, when the temperature of the PCM 24 is higher than the temperature of the passing air, i.e. in the winter.

For the purposes of selecting a suitable PCM 24, the difference is derived between the average ambient air temperature (Ta) and the average upper ground layer temperature (Tg) each determined for a selected interval over a period of time. For example, where cooling of the passing air by the PCM 24 is required, for example during summer months, the month having the highest monthly average ambient air temperature over one or several years is selected and the difference between the average ambient air temperature and the average upper ground layer temperature for this month is derived. This difference is divided by two and the result is then added to the corresponding average upper ground layer temperature for the selected time interval, i.e. in this example, the monthly average upper ground layer temperature for the same month.

Similarly, where warming of the passing air by the PCM 24 is required, for example during winter months, the month having the lowest monthly average ambient air temperature over one or several years is selected and the difference between the average ambient air temperature (Ta) and the average upper ground layer temperature (Tg) for this month is derived. This difference is divided by two and the result is then added to the corresponding average upper ground layer temperature for the selected time interval, i.e. in this

example, the monthly average upper ground layer temperature for the same month.

Thus, to select a suitable phase change temperature of the PCM 24, it is necessary to determine the average temperature of the upper ground layer around the duct 22 and the ambient air temperature at intervals over a period of time, which, if data is not already available, will need to be determined by measurement etc..

In one example, pre-cooling of the passing air by the PCM 24 is desired. As shown in the table below, the average monthly ambient air temperature (Ta) and the average monthly upper ground layer temperature (Tg) are indicated at monthly intervals over a twelve month period from January to December, during which period the average monthly air temperature varied between 3.5°C (in January) and 16°C (in August), with the average monthly upper ground layer temperature varying between 7.5°C (in March) and 14.2°C (in October). There is thus a lag of approximately two months between the ambient air temperature and the upper ground layer temperature. The maximum average ambient air temperature, of 16°C, was recorded in August, when the corresponding average upper ground layer temperature was 13°C.

Month	Jan	Feb	Mar	Apr	May	Jun	Jul	Aug	Sep	Oct	Nov	Dec
Ta	3.5	4	6	8.5	11.5	14.5	15.9	16	13.5	10	7	4.5
Tg	9.1	8.2	7.5	8.5	10.1	12	12.6	13	14	14.2	12.3	10.1

In this example, the phase change temperature (in this example, the melting point) of a PCM 24 for pre-cooling summer air passing through the duct 22 during August, when the average ambient air temperature was highest, was calculated as (16-13)/2 = 1.5°C. This figure was added to the average upper ground layer temperature for the same month, giving 13 + 1.5 = 14.5°C as the

ideal phase change temperature of the PCM 24. A PCM 24 which changes phase at a temperature of approximately 14°C was therefore selected, to ensure optimum heat exchange between the passing air and the PCM 24, at least during the month of August, when the greatest cooling of the structure 10 will be required. An advantage of selecting the phase change temperature of the PCM 24 using this method is that the temperature difference between the PCM 24 and the maximum ambient air temperature (which, in this example, is during the day time) is maximised, whilst also permitting maximum heat transfer to the cooler ground during the night, thus allowing optimum regeneration of the PCM 24.

In the example above, sodium sulphate is particularly suitable as a PCM 24, as it has a phase change temperature of around 14°C, although any other material having the desired properties could equally be employed. An example of an appropriate PCM for use in the UK is PlusICE E15, supplied by Environmental Process Systems Ltd.

In another example, pre-heating of the passing air is desired. Using the data presented in the table above, the ideal phase change temperature of the PCM 24 for pre-heating the passing air can be determined by deriving the difference between the minimum average monthly ambient air temperature (Ta) and the corresponding monthly average ground temperature (Tg). In this example, the minimum average monthly air temperature was recorded in January, at 3.5°C. The corresponding average monthly ground temperature was 9.1°C. The difference between the monthly average air temperature and the monthly average ground temperature was thus 3.5-9.1 = -5.6. Dividing this difference by two gives -2.8, and this was added to the monthly average air temperature to give 9.1 + -2.8 = 6.3. Thus, the ideal phase change temperature for the PCM 24 to provide pre-heating of the passing air is 6.3°C.

As this temperature is lower than the monthly average ground temperature, when installed in the duct 22, the PCM is normally in its "changed" state. For example if the PCM 24 would be solid at temperatures below its phase change temperature, it is in a liquid state when installed in the duct 22. As cooler ambient air passes through the duct 22, the PCM 24 surrenders heat to it, thus warming the passing air, and eventually causing the PCM 24 to change phase, for example by solidifying. When no ambient air is passing through the duct 22, the PCM 24 is able to absorb heat from the duct 22 and the surrounding ground to raise the latent heat of the PCM 24. When the PCM 24 reaches its phase change temperature, the PCM 24 regenerates by changing phase, for example by becoming liquid again.

It is envisaged that the method and apparatus described herein will be used primarily to cool the ambient air passing through the duct 22, and thus the choice of the PCM 24 is biased towards a material which permits effective cooling of the passing air. Nevertheless, some heating of the ambient air may also be required, and thus in this example, the choice of the PCM 24 of the duct 22 reflects a compromise between the need to pre-cool air passing through the duct 22 during periods of warm weather and the need to pre-heat the passing air during periods of cold weather. Thus, the effectiveness of the PCM 24 at cooling or heating the passing air may be reduced in comparison to a material which is chosen for one of those purposes only.

If desired two or more different PCMs 24 which change phase at different temperatures may be provided in the duct 22, e.g. with one material having a phase change temperature such that it primarily assists in cooling of the passing air in the hottest month, and one material having a phase change temperature such that it primarily assists in heating the passing air in the coolest month. Where capsules 54 containing PCM 24 are provided in a resin sheet, panel or pouch, an individual sheet, panel or pouch may contain capsules containing different PCMs 24, with the proportion of each PCM 24

being determined according to the desired pre-cooling and/or pre-heating performance of the PCM 24.

In practice, a choice of PCM will usually be made at the design stage of a structure. As the maximum possible amount of pre-cooling or pre-heating of the passing air is limited by the surface area of the inner surface 50 of the duct 22, it will also be necessary to decide how much of the inner surface 50 is provided with PCM 24, and, where two or more different PCMs 24 are used, how much of each material is used.

As the PCM 24 absorbs heat from or surrenders heat to the passing air, it is heated or cooled respectively, and when the temperature of the PCM 24 has risen above or fallen below the phase change temperature of the PCM 24, the PCM 24 becomes less effective at absorbing or surrendering heat to passing higher or lower temperature air, as all of the latent heat capacity of the PCM 24, i.e. its capacity to absorb or emit heat without changing temperature, has been used. It is thus necessary to be able to regenerate the PCM 24, by cooling or heating it, to counteract the heating or cooling effect of the passing air.

Under certain climatic conditions, regeneration of the PCM 24 can be achieved by heat transfer between the PCM 24, the duct 22 and the upper ground layer in which the duct 22 is provided.

The temperature of the upper ground layer in which the duct 22 is located, at least towards an upper surface of the upper ground layer, is subject to diurnal variations, as a result of corresponding diurnal variations in the ambient air temperature, although a delay exists between a change in ambient air temperature and a corresponding change in the upper ground layer temperature, due to the thermal mass of the upper ground layer.

Nevertheless, a temperature difference may exist between the upper ground layer and the duct 22, and this temperature difference can be exploited to effect at least partial regeneration of the PCM 24.

For example, in periods of warm weather such as the summer, when the PCM 24 is effective to pre-cool ambient air passing through the duct 22, such pre-cooling may not be required during the night and/or other periods, and thus no air passes through the duct 22. As a result, no heat is absorbed by the PCM 24. The temperature of the upper ground layer during the night in such periods may be lower than that of the duct 22 and the PCM 24, and thus heat from the duct 22 and the PCM 24 is absorbed by the upper ground layer surrounding the duct 22. This causes the temperature of the duct 22 and the PCM 24 to drop.

If the temperature difference is sufficiently great, this heat transfer may be sufficient to cause the temperature of the PCM 24 to drop below the phase change temperature of the PCM, thus causing the PCM to regenerate by changing phase.

Similarly, where the PCM 24 has been selected to provided pre-heating of the passing air, during cold periods such as winter, the temperature of the duct 22 and the PCM 24 may fall during the day as heat is transferred from the duct 22 and the PCM 24 to the cooler passing air. Thus, regeneration of the PCM 24 by heating may be required. During such cold periods, pre-heating of ambient air may not be required during the night, and thus no air passes through the duct 22. As a result, the PCM 24 does not surrender any heat. The temperature of the upper ground layer during the night in such periods may be higher than that of the duct 22 and the PCM 24, and thus the duct 22 and the PCM 24 can absorb heat from the upper ground layer surrounding the duct 22. This causes the temperature of the duct 22 and the PCM 24 to rise.

If the temperature difference between the upper ground layer and the duct 22 is sufficiently large, regeneration of the PCM 24 may occur, as the PCM changes phase, for example by melting. Thus, if a PCM 24 which changes phase at a suitable temperature has been selected, regeneration of the PCM 24 is facilitated.

In some circumstances, the temperature difference between the upper ground layer and the duct 22 and PCM 24 may be insufficient fully to enable the PCM to be regenerated overnight. In these circumstances, it is possible to take advantage of the diurnal variation in the ambient air temperature to assist in cooling or heating the duct 22 and PCM 24, thus assisting in regenerating the PCM 24.

For example, during summer months, the night time ambient air temperature may be lower than the temperature reached by the duct 22 and the PCM 24 as a result of day time pre-cooling of the passing air. By passing the cooler night time ambient air through the duct 22, the duct 22 and the PCM 24 can be cooled, which assists in regenerating the PCM 24.

To further assist in the regeneration of the PCM 24 of the duct 22, a system of one or more ground loops may be provided, which ground loop or loops is/are operative, in conjunction with a ground source heat pump 62, to transfer heat between the duct 22 and a volume of the ground, in the upper ground layer and/or a lower ground layer below the upper ground layer, at a location removed from the vicinity of the duct 22.

The system of ground loops includes a first ground loop, shown generally at 60 in Figure 1. The first ground loop 60 includes a closed loop of a conduit such as a pipe 64 which communicates at a first outlet end with an outlet of the ground source heat pump 62 and at a second inlet end with an inlet of the ground source heat pump 62. The pipe 64 is preferably of polybutylene or a

similar material, and passes through or closely adjacent the walls 50 of the duct 22. In an alternative embodiment, the walls 50 of the duct 22 may be formed with internal channels or conduits which communicate with the outlet end and inlet end of the pipe 64.

The ground source heat pump 62, which may be internal to the structure 10, as shown in Figure 1, or external, includes a pump which pumps a heat exchange fluid, typically a mixture of water and antifreeze, around the first ground loop 60, to effect heating or cooling of the duct 22 and the PCM 24 as required.

The ground source heat pump 62 is of generally conventional construction, and includes a closed loop containing a refrigerant fluid, typically a gas such as a hydrofluorocarbon, which is able to absorb heat from, or transfer heat to, the heat exchange fluid circulating in the first ground loop 60. The ground source heat pump 62 further includes an evaporator, a compressor, a condenser and an expansion valve. Heating or cooling of the duct 22 and the PCM 24 by the ground source heat pump 62 and the first ground loop 60 is accomplished as follows.

Where cooling of the duct 22 and PCM 24 is required to regenerate the PCM 24, the heat exchange fluid circulating in the first ground loop 60 is initially at a lower temperature than the duct 22 and the PCM 24. Thus, as the heat exchange fluid passes through or adjacent the walls 50 of the duct 22, heat is transferred from the duct 22 to the heat exchange fluid, thus cooling the duct 22 and the PCM 24.

Part of the pipe 64 carrying the heat exchange fluid passes through or closely adjacent the evaporator of the ground source heat pump, and thus the now-heated heat exchange fluid is able to transfer heat to the evaporator thus enabling cooling of the duct as the heat exchange fluid is returned to the duct

22. The evaporator contains refrigerant fluid in a liquid state at a low pressure. As the refrigerant fluid absorbs heat from the heat exchange fluid of the first ground loop, the refrigerant fluid evaporates, changing into a gas. This refrigerant fluid gas, which is at a low pressure, then passes to the compressor, which compresses the refrigerant fluid gas, thus raising the temperature of the refrigerant fluid gas. The now high pressure gas subsequently passes to the condenser, where it condenses, turning back into a liquid and giving up its heat in the process. This cycle is repeated, allowing heat to be removed from the duct 22 and the PCM 24, thus cooling them.

Cooling of the duct 22 and the PCM 24 is typically required during hot periods, when cooling of the interior of the structure 10 is also required, and thus it is desirable that heat removed from the duct 22 and the PCM 24 by the first ground loop 60 is not transferred to the interior of the structure 10. It is also desirable to store the heat so removed, so that it can be used to heat the interior of the structure 10 and/or the duct 22 and the PCM 24 when such heating is required.

To this end, a second ground loop, shown generally at 66 in Figure 1, may be provided. The second ground loop 66 includes a closed loop of a conduit such as a pipe 68, part of which is embedded in the ground at a location removed from the duct 22. In the example shown in Figure 1, part of the second ground loop 66 is embedded in trench 70 in the upper ground layer, at a depth of between 5 and 10 metres, in a so-called "slinky" configuration. In this configuration, the trench 70 is relatively long, and the pipe 68 is arranged in loops, coils or a spiral, so as to maximise the surface area available for heat transfer between the ground and the pipe 68. This arrangement has the advantage that the trench 70 need not be particularly deep, although a relatively large area is required for the loops or coils of pipe 68. In an alternative arrangement, part of the pipe 68 is formed into a U-shape and is embedded in a borehole, which is preferably at least 15 metres deep and may

be 50 metres deep or more, at a location removed from the duct 22. An advantage of this arrangement is that the ground temperature at such depths is substantially constant, and is not influenced by the ambient air temperature, meaning that a difference will almost always exist between the temperature of the duct 22 and that of the ground in which the part of the pipe 68 is embedded, allowing heat transfer to take place. For example, in the UK, the ground temperature at such depths is typically between 11°C and 13°C. Additionally, this arrangement requires a smaller area of ground for the pipe 68, although it has the disadvantage that a borehole must be provided, requiring the use of specialist equipment.

In either case, heat exchange fluid, which is typically a mixture of water and antifreeze, is supplied to a first end of the pipe 68 by an outlet of the ground source heat pump 62 and returns to an inlet of the ground source heat pump 62 which communicates with an second end of the pipe 68, thus forming a closed loop. Part of this closed loop passes through or closely adjacent the condenser of the ground source heat pump 62, so that heat can be transferred between the condenser and the heat exchange fluid.

During cooling of the duct 22 and PCM 24, as described above, a pump may be operated to circulate the heat exchange fluid around the second ground loop 66, to transfer heat removed from the duct 22 and PCM 24 to the ground surrounding the trench 70 or borehole in which the part of the pipe 68 is embedded. In these circumstances, it is advantageous for the trench 70 or borehole in which the part of the pipe 68 is embedded to be cooler than the duct 22, as this allows the ground source heat pump to operate more efficiently, and thus it is important that the trench 70 or borehole in which the part of the pipe 68 is embedded is sufficiently far removed from the duct 22 that the temperature of the duct 22 does not affect the temperature of the trench 70 or borehole.

As the heat exchange fluid circulates around the second ground loop 66, it passes through or closely adjacent the condenser of the ground source heat pump 62, where the heat exchange fluid absorbs heat from the refrigerant fluid in the condenser. As the now-heated heat exchange fluid passes through the part of the pipe 68 embedded in the trench 70 or borehole, heat from the heat exchange fluid is transferred to the ground in which the part of the pipe 68 is embedded, thus cooling the heat exchange fluid and warming the ground. In this way, heat taken from the duct 22 and PCM 24 can be stored.

In cold conditions, it may be necessary to supply heat to the PCM 24 to regenerate it, and this can be achieved by reversing the operation of the ground source heat pump 62 by exchanging the functions of the condenser and the evaporator. Thus, heat from the ground surrounding the trench 70 or borehole in which the part of the pipe 68 of the second ground loop 66 is embedded can be transferred to the duct 22 and PCM 24

In order to increase the latent heat capacity of the second ground loop 66, the trench 70 or borehole in which the part of the pipe 68 is embedded may include additional PCM 72. Thus, the part of the pipe 68 may be embedded in or surrounded by the additional PCM 72, which is able to store and release heat in the same way as the PCM 24, discussed above.

It may also be desirable to use the second ground loop 66 to cool or heat the interior of the structure 10 directly. To this end, the ground source heat pump 62 includes a heat exchanger 74 which co-operates with the AHU 32 to transfer heat between air within the structure 10 and the refrigerant fluid of the ground source heat pump 62. Thus, if cooling of the interior of the structure 10 is required, the heat exchanger 74 can absorb heat from the air within the structure 10, with this heat subsequently being transferred to the refrigerant fluid in the ground source heat pump 62, which in turn causes it to be transferred to the ground surrounding the trench 70 or borehole in which the

part of the pipe 68 is embedded, as described above. This process can be reversed, if heating of the interior of the structure is required.

In situations where the difference in temperature between the ambient air and the ground surrounding the first ground loop and/or second ground loop 66 is relatively large, it will be possible for the refrigerant fluid to transfer heat to or from the ambient air to the ground surrounding the ground loop(s) 60, 66, such that the temperature of the ambient air is changed as the refrigerant fluid is ciculated, without the need for the evaporator and the condenser of the ground source heat pump 62 to be used.

The structure 10 is provided with a structure management system which controls the operation of the AHU 32, the ground source heat pump 62 and the fan 29 to regulate the temperature within the structure 10 and the temperature of the duct 22. The structure management system uses a plurality of internal and external temperature sensors which provide information relating to the temperature within the structure, the temperature of the duct 22 and the ambient air temperature, which information is processed by the structure management system to determine whether operation of the AHU 32, the ground source heat pump 62 and/or the fan 29 is required.

A first temperature sensor 76 is located in a convenient position within the structure 10, for example on an inner side of the wall 12. It is important that the first temperature sensor is located in a position where it will give a true indication of the air temperature within the structure 10. Thus, the first temperature sensor 76 should be positioned at a location removed from the diffusers 38 and the circulation ducts 36, as the local temperature around these components may be different to the air temperature in parts of the structure which may be occupied.

A second temperature sensor 80 is located close to the ambient air inlet 28, to provide information about the ambient air temperature to the structure management system, whilst a third temperature sensor 82 is provided in a wall 50 of the duct 22 to provide information about the temperature of the duct 22.

Examples of the possible operation of the structure management system are given below.

On a summer day, the temperature within the structure 10 may approach a level which is, for example, uncomfortable for occupants of the structure 10. If the air temperature within the structure 10, as measured by the first temperature sensor 76, rises above a pre-set threshold level, which is typically selected to be a temperature just below an air temperature which might cause discomfort to occupants of the structure 10, the structure management system operates to reduce the air temperature within the structure 10. Using the information provided by the second temperature sensor 80, the structure management system determines whether the ambient air temperature is sufficiently low to cool the interior of the structure effectively, and if so, ambient air is drawn into the structure 10 directly through vents and ducts associated with the AHU 32, without passing through the duct 22, with the AHU 32 then providing the ambient air to the interior of the structure 10.

If the external ambient air temperature is at, or reaches, a predetermined temperature, for example 4°C above the phase change temperature of the PCM 24, at which temperature this ambient air is not able effectively to cool the interior of the structure 10, the structure management system causes the ambient air inlet 28 to open, thus allowing ambient air to be cooled by drawing it through the duct 22. This pre-cooled air may then be further treated by the AHU 32, if necessary, before being provided to the structure 10.

The PCM 24 absorbs heat from the ambient air to cool it, and because of the high latent heat capacity of the PCM 24, the temperature within the duct 22, or at least of the PCM 24 around the phase change temperature, absorbs heat without a commensurate temperature rise of the material 24, until the PCM 24 changes phase, thus providing an enduring cooling effect to the air passing through the duct 22. Even when the PCM 24 has changed phase, the upper ground layer in which the duct 22 is located acts as a heat sink, absorbing heat from the duct 22 and the PCM 24, thus slowing the increase in the temperature within the duct 22.

If the temperature within the structure 10, as measured by the first temperature sensor 76, remains too high, or does not fall quickly enough, additional cooling may be required. The structure management system can thus activate the ground source heat pump 62 and the first ground loop 60, causing cooling of the PCM 24 at least to reduce the rate at which its latent heat increases as a result of contact with the passing air, thus allowing the PCM to absorb more heat from the passing air. Additionally or alternatively, the structure management system can activate the second ground loop 68 in conjunction with the ground source heat pump 62 for direct cooling of air within the structure 10, as described above.

On a summer night, cool air may be required to cool the structure 10, as heat stored during the day by structural members 20 of the structure 10 is released overnight. Some cooling of the structure 10 can be achieved by allowing ambient air, which is usually cooler at night, to enter the structure 10 directly through the ducts and vents associated with the AHU 32, without passing through the duct 22.

The duct 22 may also require cooling during the night, to counteract heating of the duct 22 caused by air passing through the duct 22 during the day, and to regenerate the PCM 24. During the night, heat may be transferred from the

duct 22 to the upper ground layer in the immediate vicinity of the duct 22, as discussed in detail above, if the temperature of the upper ground layer surrounding the duct 22 is lower than the temperature of the duct 22, with the temperature of the upper ground layer in the immediate vicinity of the duct 22 thus increasing as a result.

The third temperature sensor 82 measures the temperature of the wall 50 of the duct 22, and provides information to the structure management unit allowing the structure management unit to ascertain whether sufficient cooling of the duct 22 and the PCM is occurring. If cooling of the duct 22 in this way is insufficient to regenerate the PCM 24, cool ambient air can be drawn through the duct 22, with the aid of the fan 29 if necessary, to cool the duct 22, with the air drawn through the subterranean duct being exhausted through a bypass outlet 31, which can be brought into fluid communication with the duct 22 by means of a valve or similar device to allow air which has been heated in passing through the duct 22 to escape to an exterior of the structure 10 instead of entering the AHU 32. It is desirable, however, to minimise operation of the fan 29, to minimise the amount of energy used, and thus the structure management unit may be operative only to activate the fan 29 where its use is justified, for example when a temperature difference of 1°C or more exists between the measured temperature of the wall 50 of the duct 22 and the phase change temperature of the PCM 24.

If the temperature of the wall 50 of the duct 22, as measured by the third temperature sensor 82, remains too high, or fails to fall sufficiently quickly, for effective cooling and regeneration of the PCM 24, further cooling of the duct 22 may be desired. In these conditions, the structure management system can activate the ground source heat pump 62 in conjunction with the first ground loop 60 and, if necessary, the second ground loop 68, to lower the temperature of the PCM 24, thus regenerating the PCM 24.

During colder periods such as winter, it may be necessary to heat the structural element 20 during the day, so as to heat the structure 10. The amount of energy required to heat the structural element 20 can be reduced by pre-treating ambient air by passing it through the duct 22. The pre-heated ambient air can be further heated before being provided to the interior of the structure 10 by the AHU 32.

If the air temperature of the interior of the structure 10, as measured by the first temperature sensor 76, falls below a predefined value, the structure management system acts to raise the air temperature.

As the table above illustrates, in the UK the upper ground layer temperature during cold periods is usually higher than the ambient air temperature and the PCM 24 is thus able to absorb heat from the upper ground layer and transfer it to air passing through the duct 22.

The structure management system causes the ambient air inlet 28 to open, allowing ambient air to flow through the duct 22, with the ambient air being heated by the duct 22 and the PCM 24 before entering the AHU 32, where it may be further heated.

If, despite this, the air temperature within the structure 10 remains below the predefined value, additional heating may be required. If additional heating is required, the structure management system can operate the ground source heat pump 62, in conjunction with the first and second ground loops 60, 68, to transfer heat from the trench 70 or bore hole and the additional PCM 72 to the duct 22 and thus to the PCM 24. Additionally or alternatively, the second ground loop 66 can be operated to heat the interior of the structure 10 directly, by transferring heat from the trench 70 or borehole and the additional PCM 72 to the heat exchanger 34 associated with the AHU 32 to heat air supplied to the structure 10 directly.

It is necessary to regenerate the PCM 24 during the night, so that it is able to provide heat the following day. To effect this regeneration, the structure management system activates the ground source heat pump 62, in conjunction with the first and second ground loops 60, 66, causing heat from the trench 70 or bore hole and the additional PCM 72 to be transferred to the duct 22 and the PCM 24. The third temperature sensor 82 senses the temperature of the wall 50 of the subterranean duct, and provides a signal to the structure management system when the temperature of the duct 22 reaches a predetermined level at which the PCM has regenerated, so that the structure management system can slow or stop the operation of the ground source heat pump 62 and the first and second ground loops 60, 66, to prevent excess heat from being supplied to the duct 22 and the PCM 24.

Whilst night-time cooling, as described above, can be effective, it is possible that this may not provide sufficient cooling to regenerate the PCM 24 fully, enabling it to operate most effectively, as the upper ground layer in the immediate vicinity of the duct 22 heats up by absorbing heat from the duct 22, for example. Similarly, when the PCM 24 of the duct 22 is required to provide a large amount of heat to the passing air, the PCM requires heating, to regenerate it. Night-time heating of the PCM, as described above, may not provide sufficient heat to regenerate the PCM 24 fully.

To alleviate the problem of insufficient night-time regeneration of the PCM 24, one or more additional subterranean ducts 22 may be provided to heat or cool air entering the AHU 32. As the temperature of upper ground layer in the immediate vicinity of the duct 22 changes temperature as a result of the changing temperature of the duct 22, it is important that the subterranean ducts 22 are spaced sufficiently far apart that the temperature of the upper ground layer in the immediate vicinity of one duct 22 is not affected by any

change in the temperature of the upper ground layer in the immediate vicinity of another duct 22.

The plurality of subterranean ducts may be used to provide cooled or heated air on a cyclic basis, with, for example, first and second subterranean ducts being used on alternate days or weeks. The use of one or more additional subterranean ducts 22 thus allows the PCM 24 of the other subterranean ducts 22 sufficient time to regenerate, by heat exchange with the upper ground layer surrounding the subterranean ducts 22 and/or by heat exchange with the lower ground layer, by operation of the ground source heat pump 62.

Similarly, to increase the capacity for cooling and heating the subterranean duct(s) 22, a plurality of second ground loops 66 may be provided, each using a trench 70 or borehole, with the trenches 70 or boreholes being sufficiently far removed from the subterranean duct(s) 22 and the other trenches 70 or boreholes that the temperature of the ground surrounding each trench 70 or borehole is substantially unaffected by the subterranean duct(s) or the other trenches 70 or boreholes. The additional second ground loops may be used on a cyclic basis to cool or heat the subterranean duct(s) 22 and the PCM 24.

Various modifications may be made. For example, the duct 22 may include more than one type of PCM 24, to provide additional or alternative heating or cooling of air passing through the duct 22.

The structure management system may operate the system in sections. If the duct 22 relies only on the heat transfer from/to the ground in which the duct 22 is embedded, over a period of time, with sustained use of the duct 22, the ability of the duct 22 to heat or cool air passing therethrough will diminish. This is because the temperature of the duct 22 will become closer to the temperature of the passing air, and this effect will be greater the larger the

difference between the duct 22 and the passing air. To maintain the effectiveness of the duct 22, the PCM 24 can be arranged so that a greater volume of PCM 24 is placed in the part of the duct 22 in which the largest amount of heat is transferred. The difference in temperature between duct 22 and the passing air is generally greatest near to the ambient air inlet 28 of the duct 22, therefore it is advantageous to position a relatively large volume of PCM 24 near to the ambient air inlet 28 of the duct 22.

Additionally or alternatively, the first ground loop 60 may be provided in a plurality of sections which lie adjacent each other, along the length of the duct 22. Each of the sections is operable independently of the other sections, so that any number of the sections may be operated at any one time, as required. This is to enable the duct 22 to be heated or cooled, the PCM 24 to be regenerated or for heat to be transferred directly from/to the air passing through the duct 22, only at the positions where such action is necessary. This increases the efficiency of the system.

The use of phase change material to pre-treat passing air is not limited to the field of building structures, but can be applied to any application in which pre-treatment of air used to change the temperature of a thermal load is desirable.

However, where the invention is applied to a building structure, this may not be limited to the kind having ducted structural elements as described, but to many other suitable building types.

Whilst the preferred embodiment uses air to change the temperature of a structure 10, any other suitable fluid, for example water, could be used, with appropriate modifications.

The features disclosed in the foregoing description, or the following claims, or the accompanying drawings, expressed in their specific forms or in terms of a

means for performing the disclosed function, or a method or process for attaining the disclosed result, as appropriate, may, separately, or in any combination of such features, be utilised for realising the invention in diverse forms thereof.

5

Claims

1. A method of changing the temperature of a thermal load including the steps of passing ambient air at a first temperature through a subterranean duct at a second, ground, temperature where heat is exchanged between the passing air and the duct to pre-treat the passing air by modifying the temperature of the passing air, providing a phase change material in the duct which undergoes a phase change within a predetermined temperature range, thermally contacting the passing air with the phase change material whereby heat is exchanged between the passing air and the phase change material to change the latent heat of the phase change material, and subsequently passing the air to the thermal load to exchange heat with the thermal load.

2. A method according to claim 1 wherein the subterranean duct is embedded in an upper ground layer at a depth greater than 1.5 metres.

3. A method according to claim 2 wherein the subterranean duct is embedded in the upper ground layer at a depth of between 5.5 and 7.5 metres.

4. A method according to any of claims 1 to 3 wherein the pre-treated air is further cooled or heated prior to being passed to the thermal load.

5. A method according to any of claims 1 to 4 wherein the thermal load is a structural element of a structure.

6. A method according to claim 5 wherein the structural element is provided with internal channels, and the method includes passing the pre-treated air though the internal channels.

7. A method according to any of claims 1 to 6 wherein the thermal load is cooled by the pre-treated air and heat is reclaimed from the air after the air is heated by the thermal load.

8. A method according to any of claims 1 to 7 further including the steps of providing a first ground loop, part of which passes through or closely adjacent a wall of the subterranean duct, for transferring heat from or to the subterranean duct, and passing a heat exchange material through the first ground loop to transfer heat from or to the subterranean duct, thus to change the latent heat of the phase change material.

9. A method according to clam 8 wherein the ground loop is provided in a plurality of independently operable sections, which lie adjacent each other along the subterranean.

10. A method according to claim 8 or claim 9 further including the steps of providing a second ground loop, part of which is embedded in the upper ground layer or a lower ground layer, and passing a heat exchange material through the second ground loop, to transfer heat from or to the heat exchange material of the first ground loop.

11. A method substantially as hereinbefore described with reference to the accompanying drawings.

12. An apparatus for changing the temperature of a thermal load, the apparatus including a subterranean duct having an inlet for ambient air, the duct including phase change material whereby in use heat is exchanged between ambient air passing through the duct and the phase change material to change the temperature of the air, the apparatus further having an outlet through which the temperature-changed air may be passed towards the thermal load.

13. An apparatus according to claim 12 wherein the subterranean duct is embedded in an upper ground layer at a depth greater than 1.5 metres.

14. An apparatus according to claim 13 wherein the subterranean duct is embedded in the upper ground layer at a depth of between 5.5 and 7.5 metres.

15. An apparatus according to any of claims 12 to 14 wherein the thermal load is a structural element of a structure, which structural element is provided with internal channels through which air can pass.

16. An apparatus according to claim 15 wherein an ambient air inlet which communicates with the air inlet of the subterranean duct is provided on or near a North-facing wall of the structure.

17. An apparatus according to claim 16 wherein the ambient air inlet is positioned at a height sufficiently far above ground level to minimise the amount of atmospheric pollution that enters the subterranean duct through the inlet.

18. An apparatus according to any of claims 16 or 17 wherein a fan is provided to assist air in passing through the subterranean duct.

19. An apparatus according to any of claims 12 to 18 wherein the outlet of the subterranean duct communicates with an air handling unit of the structure.

20. An apparatus according to claim 19 wherein the air handling unit is a part of an air distribution system which is operative to provide the air from the outlet of the subterranean duct to an interior of the structure.

21. An apparatus according to claim 19 or claim 20 wherein the air handling unit includes an air cooler or heater to cool or heat, respectively, the air from the outlet of the subterranean duct before the air is provided to the interior of the structure.

22. An apparatus according to any of claims 12 to 17 further including a bypass outlet from the subterranean duct, through which outlet air can escape to an exterior of the structure.

23. An apparatus according to any of claims 12 to 22 wherein the phase change material is provided on an inner wall of the subterranean duct, the inner wall having an uneven surface.

24. An apparatus according to any of claims 12 to 23 wherein phase change material is mounted on one or more structures within the subterranean duct.

25. An apparatus according to claim 24 wherein the phase change material is provided on a free-standing, generally upright formation provided on a floor of the subterranean duct.

26. An apparatus according to claim 24 wherein the phase change material is provided on a formation projecting from a wall, floor or ceiling of the subterranean duct.

27. An apparatus according to any of claims 12 to 26 wherein the phase change material is provided in a plurality of individual capsules.

28. An apparatus according to claim 27 wherein the capsules are substantially spherical.

29. An apparatus according to claim 28 wherein the capsules each have a diameter of approximately 5mm.

30. An apparatus according to any of claims 12 to 29 wherein the phase change material is removably attached to the subterranean duct.

31. An apparatus according to claim 30 wherein the subterranean duct includes hooks for the removable attachment of phase change material.

32. An apparatus according to claim 30 wherein each of the subterranean duct and the phase change material is provided with one of a pair of matching profiles so that the phase change material can be attached to the subterranean duct in a push-fit arrangement.

33. An apparatus according to any of claims 12 to 32 wherein the phase change material changes phase at a temperature of approximately 14°C.

34. An apparatus according to any of claims 12 to 33 wherein the phase change material is sodium sulphate.

35. An apparatus according to any of claims 12 to 34 wherein a first ground loop is provided and is associated with a ground source heat pump which is operative to effect circulation of a heat exchange fluid around the first ground loop, wherein part of the first ground loop passes through or closely adjacent a wall of the subterranean duct, for transferring heat from or to the subterranean duct.

36. An apparatus according to claim 35 wherein the part of the first ground loop includes a conduit which is embedded in or integral with the wall of the subterranean duct at a position adjacent the phase change material.

37. An apparatus according to claim 35 or 36 wherein the ground loop includes a plurality of independently operable sections which lie adjacent one another along the subterranean duct.

38. An apparatus according to anyone of claims 35 to 37wherein a second ground loop is provided and is associated with the ground source heat pump, the ground source heat pump being operative to effect circulation of a heat exchange fluid around the second ground loop, wherein part of the second ground loop includes a conduit which is embedded in the ground.

39. An apparatus according to claim 38 wherein the ground source heat pump includes a condenser and an evaporator, the condenser being associated with the first ground loop and the evaporator being associated with the second ground loop, such that heat removed from the subterranean duct can be transferred to the ground.

40. An apparatus according to claim 39 wherein the function of the ground source heat pump is reversible.

41. An apparatus according to any of claims 38 to 40 wherein the conduit of the second ground loop is embedded in a trench in the upper ground layer.

42. An apparatus according to any of claims 38 to 40 wherein the conduit of the second ground loop is embedded in a borehole which extends into the lower ground layer.

43. An apparatus according to any of claims 38 to 42 wherein the conduit of the second ground loop is formed into loops, coils or a spiral.

44. An apparatus according to claim 42 or 43 wherein the depth of the borehole is at least 15 metres.

45. An apparatus according to any of claims 38 to 44 wherein the conduit of the second ground loop is embedded in additional phase change material.

46. An apparatus substantially as hereinbefore described with reference to the accompanying drawings.

47. A method of selecting a suitable phase change temperature for a phase change material for use in a method according to any one of claims 1 to 10 including the steps of determining an average ambient air temperature at a location of the subterranean duct at selected intervals over a period of time, determining a corresponding average upper ground layer temperature at the location of the subterranean duct at the selected intervals over the period of time, selecting an interval in which the maximum or minimum average ambient air temperature occurs, and adding one half of the difference between the average ambient air temperature and the corresponding average upper ground layer temperature to the average upper ground layer temperature in the selected interval.

48. A duct for subterranean installation, through which ambient air at a first temperature can pass to modify the temperature of the passing air, wherein phase change material is attachable to the duct.

49. A duct substantially as hereinbefore described with reference to the accompanying drawings.

50. Any novel feature or novel combination of features described herein and/or in the accompanying drawings.

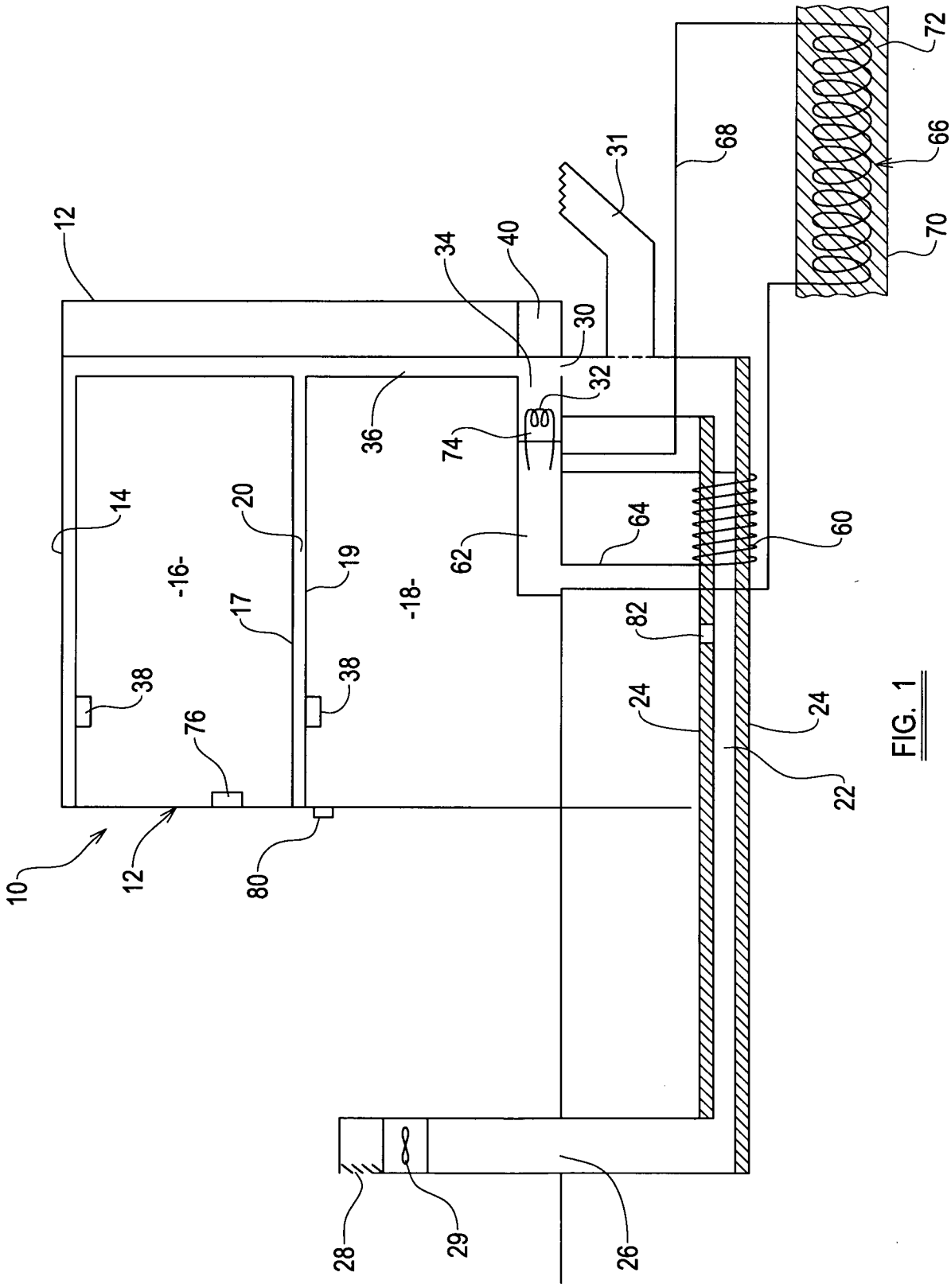
12
34
40
31
68
72
66
70
30
32
36
74
14
20
19
64
60
62
-16-
-18-
17
82
38
38
24
24
76
22
10
12
80
28
29
26

FIG. 1

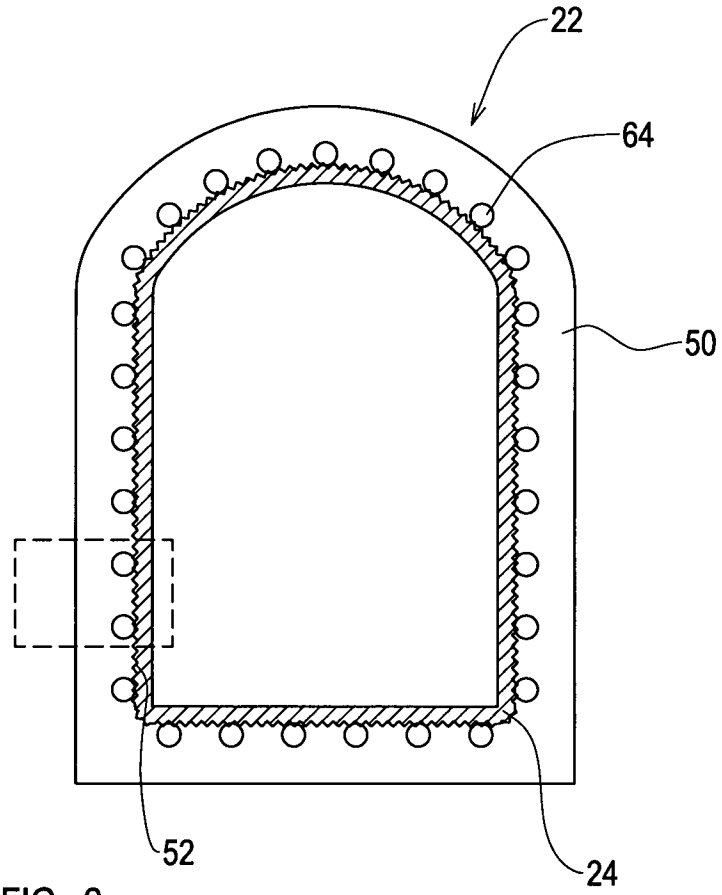

FIG. 2

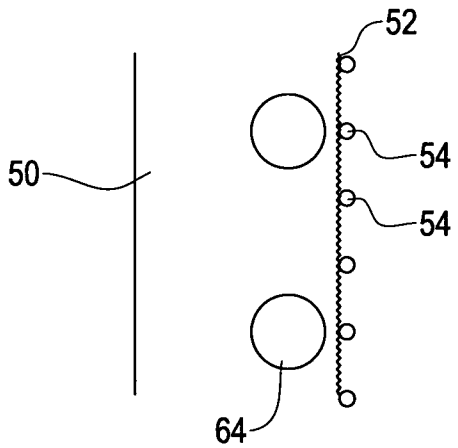

FIG. 3

INTERNATIONAL SEARCH REPORT

International application No
PCT/GB2008/000452

A. CLASSIFICATION OF SUBJECT MATTER
INV. F24H3/06 E04B5/48 F24D3/12 F24D5/02 F24D5/12
F24D11/02 F24F5/00 F28D20/02

According to International Patent Classification (IPC) or to both national classification and IPC

B. FIELDS SEARCHED

Minimum documentation searched (classification system followed by classification symbols)
F24H E04B F24D F24F F28D

Documentation searched other than minimum documentation to the extent that such documents are included in the fields searched

Electronic data base consulted during the international search (name of data base and, where practical, search terms used)
EPO-Internal

C. DOCUMENTS CONSIDERED TO BE RELEVANT

Category*	Citation of document, with indication, where appropriate, of the relevant passages	Relevant to claim No.
X	DE 27 29 635 A1 (BACKLUND ANDERS DANIEL) 11 January 1979 (1979-01-11) page 7; figures 6,8 page 10 - page 17	1,4-7, 12,15, 18-21,48
A	US 4 296 798 A (SCHRAMM HORST) 27 October 1981 (1981-10-27) column 4 column 9 - column 11; figures 1-17	1,12
A	WO 99/47865 A (IPA ISORAST INT [PA]; KRECKE EDMOND D [LU]) 23 September 1999 (1999-09-23) page 4 - page 6; figures 1,6	1-12

-/--

[X] Further documents are listed in the continuation of Box C.

[X] See patent family annex.

* Special categories of cited documents :

"A" document defining the general state of the art which is not considered to be of particular relevance

"E" earlier document but published on or after the international filing date

"L" document which may throw doubts on priority claim(s) or which is cited to establish the publication date of another citation or other special reason (as specified)

"O" document referring to an oral disclosure, use, exhibition or other means

"P" document published prior to the international filing date but later than the priority date claimed

"T" later document published after the international filing date or priority date and not in conflict with the application but cited to understand the principle or theory underlying the invention

"X" document of particular relevance; the claimed invention cannot be considered novel or cannot be considered to involve an inventive step when the document is taken alone

"Y" document of particular relevance; the claimed invention cannot be considered to involve an inventive step when the document is combined with one or more other such documents, such combination being obvious to a person skilled in the art.

"&" document member of the same patent family

Date of the actual completion of the international search	Date of mailing of the international search report
23 May 2008	04/06/2008

Name and mailing address of the ISA/	Authorized officer
European Patent Office, P.B. 5818 Patentlaan 2 NL - 2280 HV Rijswijk Tel. (+31-70) 340-2040, Tx. 31 651 epo nl, Fax: (+31-70) 340-3016	García Moncayo, O

Form PCT/ISA/210 (second sheet) (April 2005)

INTERNATIONAL SEARCH REPORT

International application No
PCT/GB2008/000452

C(Continuation). DOCUMENTS CONSIDERED TO BE RELEVANT

Category*	Citation of document, with indication, where appropriate, of the relevant passages	Relevant to claim No.
A	FR 2 153 119 A (BETEILIGUNGS AG HAUSTECHNIK BETEILIGUNGS AG HAUSTECHNIK [CH]) 27 April 1973 (1973-04-27) the whole document	5,6,15
A	DE 30 14 390 A1 (POLYTHERM VERTRIEBSGESELLSCHAF [DE]) 22 October 1981 (1981-10-22) the whole document	5,6,15
A	EP 0 115 014 A (SCHMITZ JOHANNES) 8 August 1984 (1984-08-08) abstract; figures 1,2	1,12

Continuation of Box II.2

Claims Nos.: 11, 46, 49, 50

The claims 11,46,49 and 50 contain references to the drawings and they are formulated in such a vague and unclear manner that no meaningful search could be carried out.

The applicant's attention is drawn to the fact that claims relating to inventions in respect of which no international search report has been established need not be the subject of an international preliminary examination (Rule 66.1(e) PCT). The applicant is advised that the EPO policy when acting as an International Preliminary Examining Authority is normally not to carry out a preliminary examination on matter which has not been searched. This is the case irrespective of whether or not the claims are amended following receipt of the search report or during any Chapter II procedure. If the application proceeds into the regional phase before the EPO, the applicant is reminded that a search may be carried out during examination before the EPO (see EPO Guideline C-VI, 8.2), should the problems which led to the Article 17(2)PCT declaration be overcome.

INTERNATIONAL SEARCH REPORT

International application No.
PCT/GB2008/000452

Box No. II Observations where certain claims were found unsearchable (Continuation of item 2 of first sheet)

This international search report has not been established in respect of certain claims under Article 17(2)(a) for the following reasons:

1. ☐ Claims Nos.:
because they relate to subject matter not required to be searched by this Authority, namely:

2. ☒ Claims Nos.: 11, 46, 49, 50
because they relate to parts of the international application that do not comply with the prescribed requirements to such an extent that no meaningful international search can be carried out, specifically:
see FURTHER INFORMATION sheet PCT/ISA/210

3. ☐ Claims Nos.:
because they are dependent claims and are not drafted in accordance with the second and third sentences of Rule 6.4(a).

Box No. III Observations where unity of invention is lacking (Continuation of item 3 of first sheet)

This International Searching Authority found multiple inventions in this international application, as follows:

1. ☐ As all required additional search fees were timely paid by the applicant, this international search report covers allsearchable claims.

2. ☐ As all searchable claims could be searched without effort justifying an additional fees, this Authority did not invite payment of additional fees.

3. ☐ As only some of the required additional search fees were timely paid by the applicant, this international search reportcovers only those claims for which fees were paid, specifically claims Nos.:

4. ☐ No required additional search fees were timely paid by the applicant. Consequently, this international search report is restricted to the invention first mentioned in the claims; it is covered by claims Nos.:

Remark on Protest

☐ The additional search fees were accompanied by the applicant's protest and, where applicable, the payment of a protest fee.

☐ The additional search fees were accompanied by the applicant's protest but the applicable protest fee was not paid within the time limit specified in the invitation.

☐ No protest accompanied the payment of additional search fees.

INTERNATIONAL SEARCH REPORT

Information on patent family members

International application No
PCT/GB2008/000452

Patent document cited in search report	Publication date	Patent family member(s)	Publication date
DE 2729635 A1	11-01-1979	AU 513830 B2	08-01-1981
		AU 2687277 A	11-01-1979
US 4296798 A	27-10-1981	AT 368224 B	27-09-1982
		CA 1119422 A1	09-03-1982
		CH 647289 A5	15-01-1985
		DE 2750918 A1	17-05-1979
WO 9947865 A	23-09-1999	AT 269520 T	15-07-2004
		AU 757015 B2	30-01-2003
		AU 3332699 A	11-10-1999
		BR 9908693 A	21-11-2000
		CA 2322556 A1	23-09-1999
		CZ 20003273 A3	12-12-2001
		EA 4624 B1	24-06-2004
		EP 1062463 A1	27-12-2000
		ES 2219005 T3	16-11-2004
		PL 342849 A1	16-07-2001
		PT 1062463 T	29-10-2004
		SI 20343 A	28-02-2001
		US 7028685 B1	18-04-2006
FR 2153119 A	27-04-1973	AT 321518 B	10-04-1975
		AU 473500 B2	24-06-1976
		AU 4642572 A	21-03-1974
		CA 985590 A1	16-03-1976
		CA 969054 A1	10-06-1975
		DE 2242581 A1	29-03-1973
		DE 2245152 A1	29-03-1973
		DE 2245153 A1	29-03-1973
		DE 2265239 A1	24-02-1977
		DE 2265240 A1	24-02-1977
		ES 406765 A1	01-10-1975
		FR 2166905 A5	17-08-1973
		FR 2153118 A1	27-04-1973
		GB 1388937 A	26-03-1975
		GB 1413675 A	12-11-1975
		GB 1388598 A	26-03-1975
		IT 967533 B	11-03-1974
		IT 967534 B	11-03-1974
		IT 967535 B	11-03-1974
		JP 48037746 A	04-06-1973
		JP 48037750 A	04-06-1973
		SE 388027 B	20-09-1976
		US 3893506 A	08-07-1975
		ZA 7206309 A	25-07-1973
DE 3014390 A1	22-10-1981	NONE	
EP 0115014 A	08-08-1984	NONE	