E. B. HULSEY & J. A. D. HERRINGTON.

STOP MOTION FOR MOTION PICTURE MACHINES.

APPLICATION FILED JULY 25, 1916.

1,261,029.

Patented Apr. 2, 1918.

3 SHEETS—SHEET 1.

Fig. 1.

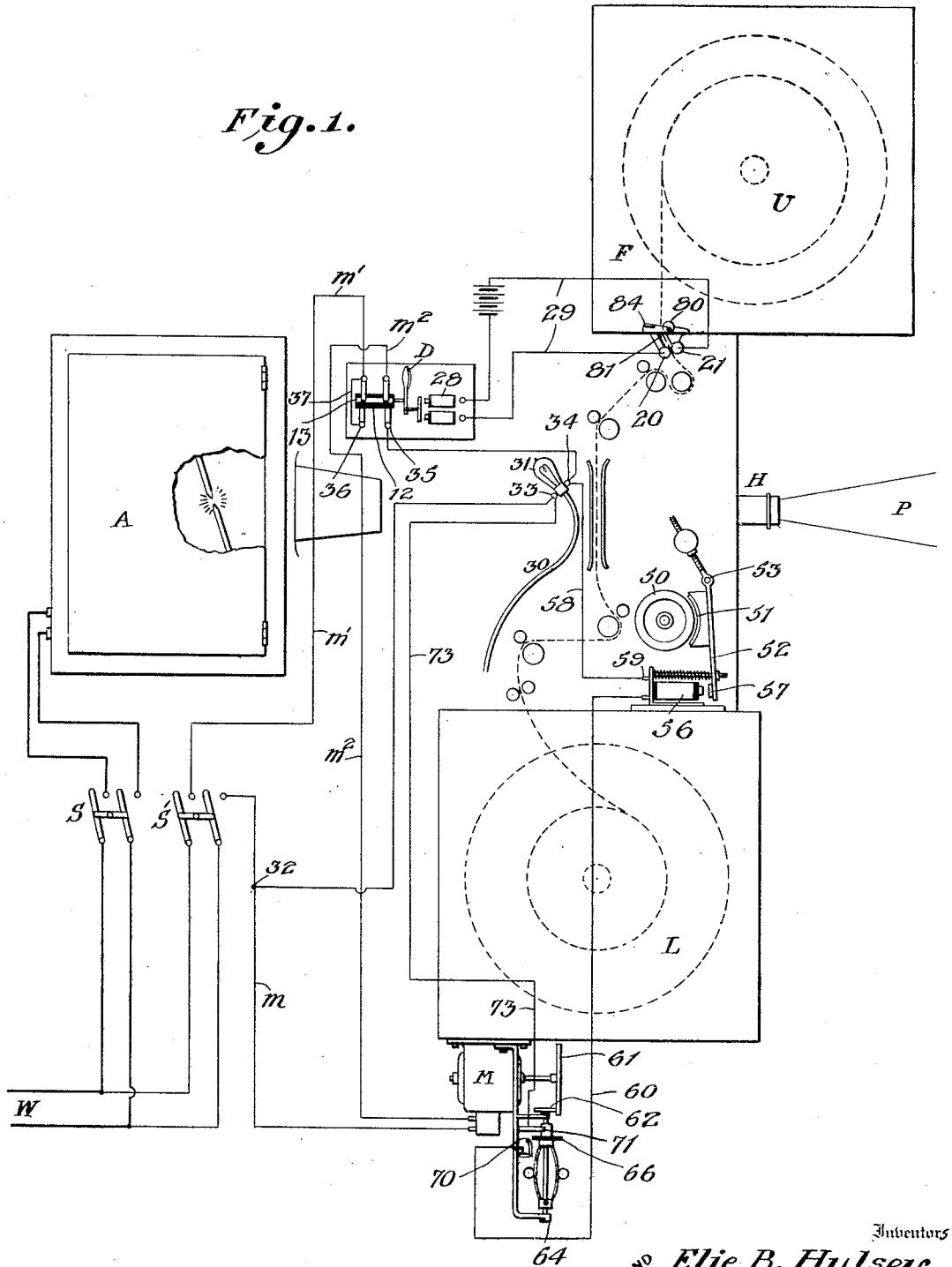

Inventors

AND Elie B. Hulsey

John A. D. Herrington

By Beall & Fenwick

Attorneys

E. B. HULSEY & J. A. D. HERRINGTON.

STOP MOTION FOR MOTION PICTURE MACHINES.

APPLICATION FILED JULY 25, 1916.

1,261,029.

Patented Apr. 2, 1918.

3 SHEETS—SHEET 2.

Fig. 2.

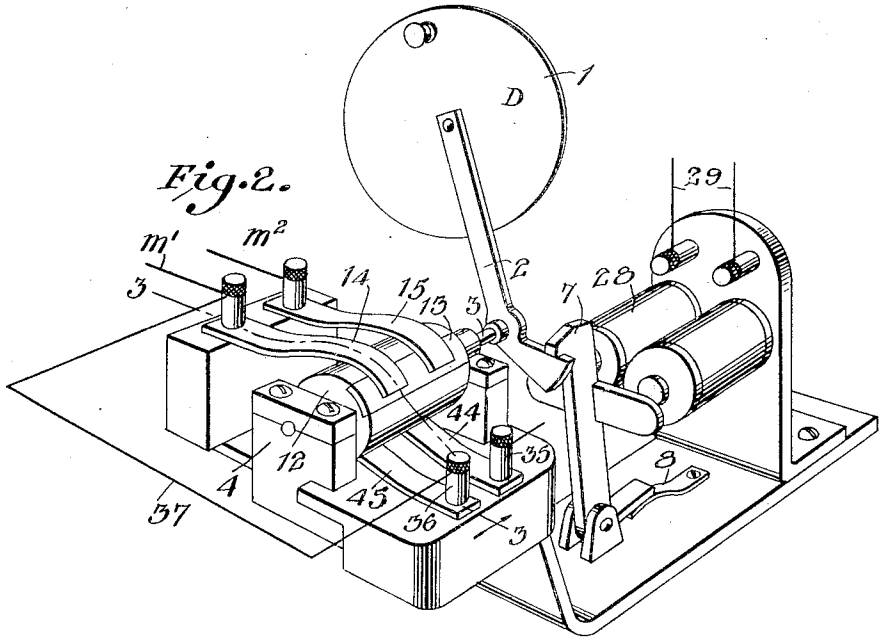

Fig. 3.

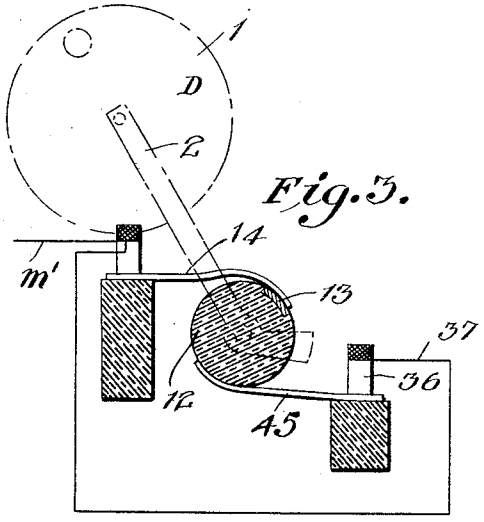

Fig. 4.

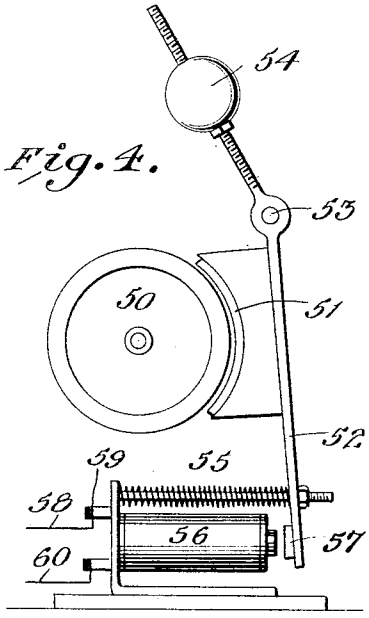

Inventors

AND Elie B. Hulsey

John A. D. Herrington

By Beall & Fenwick

Attorneys.

E. B. HULSEY & J. A. D. HERRINGTON.

STOP MOTION FOR MOTION PICTURE MACHINES.

APPLICATION FILED JULY 25, 1916.

1,261,029.

Patented Apr. 2, 1918.

3 SHEETS—SHEET 3.

Fig. 5.

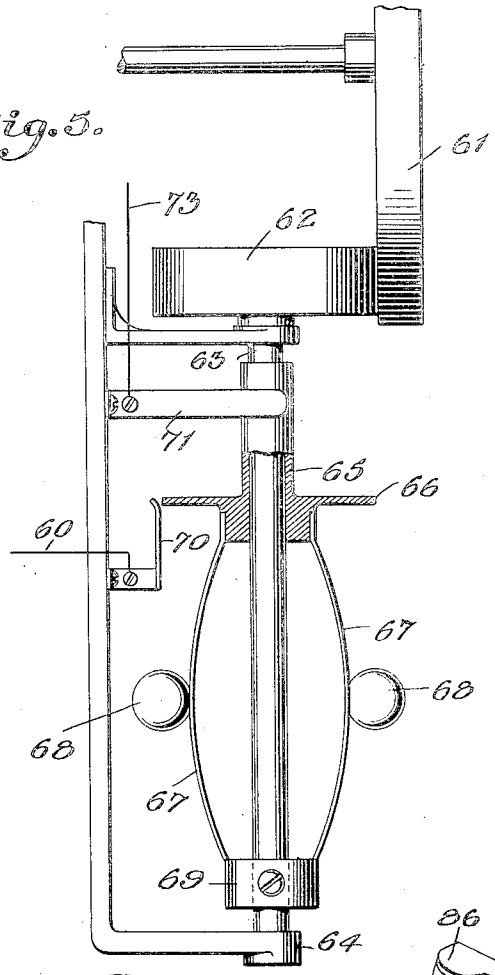

Fig. 6.

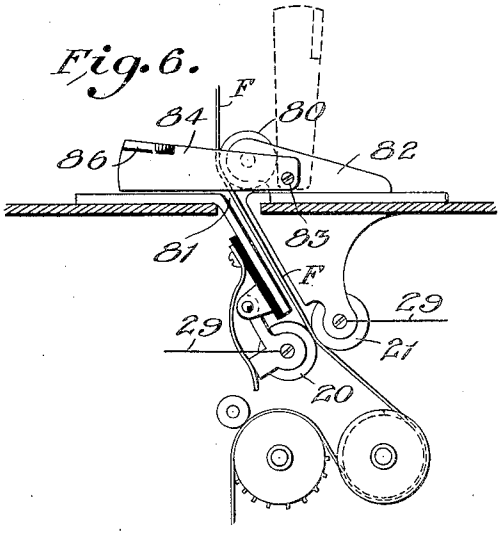

Fig. 7.

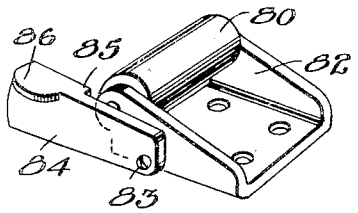

Fig. 8.

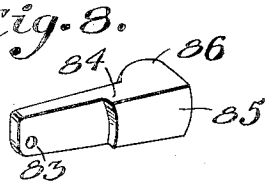

Inventors:

AND Elie B. Hulsey

John A. D. Herrington

By Beall & Fenwick

Attorneys

UNITED STATES PATENT OFFICE.

ELIE B. HULSEY AND JOHN A. D. HERRINGTON, OF TUPELO, MISSISSIPPI, ASSIGNORS OF ONE-FOURTH TO WILEY A. BLAIR AND ONE-FOURTH TO GEORGE H. HILL, BOTH OF TUPELO, MISSISSIPPI.

STOP-MOTION FOR MOTION-PICTURE MACHINES.

1,261,029. Specification of Letters Patent. Patented Apr. 2, 1918.

Application filed July 25, 1916. Serial No. 111,241.

To all whom it may concern:

Be it known that we, ELIE B. HULSEY and JOHN A. D. HERRINGTON, citizens of the United States, residing at Tupelo, in the county of Lee and State of Mississippi, have invented certain new and useful Improvements in Stop-Motions for Motion-Picture Machines; and we do hereby declare the following to be a full, clear, and exact description of the invention, such as will enable others skilled in the art to which it appertains to make and use the same.

This invention relates to motion picture apparatus, and more especially to stop motion devices actuated by a defective or torn film, and the present application is an improvement on our prior application for patent filed June 1, 1916 and bearing Serial Number 101,198. To the mechanism set forth in said application we now add a lamp placed in a shunt from the motor circuit, a brake for the fly wheel applied by an impulse through said circuit, and a centrifugal circuit closer driven by the motor and which when the motor stops, moves to break the circuit through the magnet which energizes the brake—thus releasing the brake without extinguishing the light. The present invention also adds to our former structure a gate or closure across the guide roller adjacent the outlet valve from the upper magazine, for the purpose of directing the film at this point accurately between the contact rollers. Details will be found in the following specification and claims, and are shown in the drawings wherein:—

Figure 1 is a diagrammatic right side elevation of a motion picture apparatus complete, showing the location of the several instrumentalities constituting part of this invention, and the wiring.

Fig. 2 is a perspective detail of the dowser supporting mechanism and the double circuit closer actuated by its movements, and Fig. 3 is a sectional detail on about the line 3—3 of Fig. 2.

Fig. 4 is an enlarged detail of the brake mechanism.

Fig. 5 is an enlarged detail of the centrifugal circuit closer.

Fig. 6 is an enlarged detail of the valve and gate referred to, and Figs. 7 and 8 are perspective details of parts of this mechanism.

Broadly speaking, the motion picture apparatus shown generally in Fig. 1 comprises line wires W leading from a suitable source of electricity and branched through a switch S to a powerful light within the lamp box A, and also through a switch S′ and a wire m to a motor M. The other wire m' from this switch leads to a circuit breaker controlled by the action of the dowser D as described below, and thence along a wire m^2 to the other side of the motor. The head H is disposed forward of the lamp box and the upper and lower magazines U and L are provided with mechanism for carrying the film F out the gate in the upper magazine and through the head as usual. We have not considered it necessary to show the details of this machine, but it may be advisable to state here what is the action in our prior application.

When the motor is running and the film is perfect, the picture is projected as indicated at P. When a tear in one margin of the film passes between the rollers 20 and 21, they are permitted to come in contact with each other so as to close a circuit 29 indicated in Figs. 6 and 1, and this energizes an electro-magnet 28 and retracts a catch 7 and permits the dowser to fall. Said dowser consists of a disk or shutter 1 mounted on an arm 2 carried on a shaft 3 which is mounted in bearings 4, and the catch 7 is projected normally into position to engage the tail of the arm 2 by a spring 8. Said shaft also carries a double circuit breaker consisting of a roller 12 of fiber or other insulating material having a metal plate 13 inset into it at one side, and against this roller bear two fingers 14 and 15 so that the plate 13 may contact with both and close a circuit through them when the roller is in proper position. The wires m' and m^2 above described are connected with binding posts to which these fingers are attached, and therefore when the dowser falls the circuit to the motor is cut off. Then the operator has an opportunity to repair a defective film or to pass it through the shutter if it be too bad to be used, after which he manually raises the dowser so as to restore the circuit through the motor and the machine automatically resumes its operation.

It will be observed, however, that excepting for what light leaks out of the lamp box, the operator has no light by which to make his repairs unless there is one within reach;

and one object of the present invention is to provide a small lamp and means for automatically illuminating it just at this time. On a suitable standard 30 rising from the frame of the machine is supported a lamp 31, and a shunt circuit leads from the point 32 in the motor circuit to one side of this lamp at the point 33, thence from the other side at the point 34 to a binding post 35 which will be found in Figs. 1 and 2. Adjacent this post is another numbered 36 from which a wire 37 leads to the wire *m'*. Said posts 35 and 36 respectively carry fingers 44 and 45 which overlie the roller 12, and when the dowser falls the plate 13 on said roller closes a circuit through said fingers and the wires just described. Then current flows along the wire *m'*, 37, finger 45, through the plate 13 to the finger 44, thence through the lamp 31 and along the lamp circuit to the point 32, and finally back to the switch S'. Therefore, when the dowser falls the motor circuit is broken and the lamp circuit is closed so that the motor ceases running and the lamp begins to burn. As soon as the operator has completed his repairs and raises the dowser, the motor circuit is reëstablished and the motor resumes running, whereas the lamp circuit is broken and the light is extinguished.

We have found, however, that the mechanism runs by momentum for a considerable time after the power is shut off from the motor, whereas it is desirable to stop the feed of the film before the tear therein becomes excessive. Therefore opposite the fly wheel 50 we place a brake 51 whose shoe is mounted on an arm 52 pivoted at 53 and moved away from the wheel either by a weight 54 or a spring 55 or both; and adjacent the free end of this arm is an electromagnet 56, acting on an armature 57 to apply the brake when current is permitted to flow through the magnet. Leading from the point 34 at one side of the lamp is a wire 58 which is connected at 59 with the magnet 56, and another wire 60 leads from this magnet back to the other side of the lamp 33. If this wire 60 were uninterrupted the brake would be applied always when the lamp was ignited, but in it we place another instrumentality which we will call a centrifugal circuit closer and whose details are best seen in Fig. 5.

The motor shaft is shown as driving a disk 61 which is in contact with a friction wheel 62 mounted on a shaft 63 rotating in suitable bearings carried by frame 64. On said shaft is slidably mounted a sleeve 65 carrying a metal disk 66, and spring arms 67 having weights 68 connect this disk with a hub 69 fast on the shaft. When now the latter is rotated rapidly, the weights fly outward and the entire sleeve is drawn toward the hub 69. Frame 64 carries fingers 70 and 71, the former being in position to be engaged by the disk 66 when the device rotates rapidly, whereas the finger 71 is in constant contact with the sleeve 65. To the finger 70 is connected the wire 60, whereas a wire 73 leads from the finger 71 to one side of the lamp circuit at the point 33.

When now a tear in the film automatically trips the dowser and the dowser automatically breaks the circuit of the motor, by our present invention it also automatically ignites the lamp and applies the brake so as to almost instantly check the movement of the machine. However, the motor continues by momentum for some little time—the slipping of its belt permitting—and therefore the centrifugal circuit closer also continues to run. As these elements slow down and finally come to rest, the arms 67 straighten out and the sleeve 65 and disk 66 are moved along the shaft until the disk is pushed out of contact with the finger 70. This breaks the circuit through the brake, whose shoe now moves out of contact with the fly wheel 50; but the lamp continues to burn until the operator has finished his repairs and manually opens the dowser as above described.

It is essential that the film as it passes from the reel in the upper magazine shall be fed accurately to the contact rollers 20 and 21, and yet means must be provided for permitting the threading of the film through what is called the valve at the bottom of this magazine. Near said valve is usually mounted a guide roller 80 as seen in Fig. 7, the same standing adjacent the outlet slot 81 in the bottom of the magazine, and being itself mounted in bearings in a small bracket 82. To one side of this bracket at the point 83 we pivot a gate 84 which is simply a flat piece of metal of a length sufficient to project past the end of the roller, beyond which it may be turned inward slightly in a lip 85, and at the free end of the gate we may provide a thumb piece 86. This gate is of sufficient length to lie entirely across the edge of the film F as seen in Fig. 6, and its location is such that the film is accurately fed to the rollers 20 and 21; but when an accident occurs or the film must be removed or a new one inserted, the operator has but to grasp the thumb piece 86 and raise the gate to the position shown in dotted lines in Fig. 6. We prefer this detail to the guide which is often fastened to the door of the magazine, and which does not always act properly, while it often has a bad effect on a defective film, and we find that this gate does not have such effect.

What we claim is:

1. In a motion picture apparatus, the combination with a dowser, and a catch for holding it open; of a motor and its circuit, means controlled by the dowser for breaking said circuit when the dowser closes, and

electromagnetic means independent of the motor circuit for releasing the catch.

2. In a motion picture apparatus, the combination with a dowser, a catch for holding it open, electrical devices for retracting said catch, a circuit for actuating said devices, and electrical contact means for closing said circuit by the passage of an imperfect stretch of film between said means; of a motor and its circuit, and means for breaking the circuit when the dowser closes, the motor circuit being independent of the aforesaid circuit.

3. The combination with a motion picture apparatus, a dowser, mechanism for holding it raised, and an electromagnet for tripping said mechanism; of a circuit for actuating said magnet, and a circuit closer in said circuit comprising a pair of electrical contacts between which the film is embraced and which are held normally apart by the same except where it is imperfect.

4. In a motion picture apparatus, the combination with a dowser, and a double circuit closer actuated by the movement of the dowser; of a motor, a motor circuit connected with one pair of terminals in said circuit closer, a lamp, and a lamp circuit connected with the other terminals in said circuit closer whereby the closing of the dowser breaks the circuit to the motor and closes the circuit to the lamp, and an electric circuit independent of the motor and light circuits for controlling the dowser.

5. In a motion picture apparatus, the combination with a dowser, and a double circuit closer actuated by the movement of the dowser; of a motor, a motor circuit connected with one pair of terminals in said circuit closer, a lamp, a lamp circuit connected with the other terminals in said circuit closer, a brake adjacent a moving part in the head of the apparatus, electrical devices for applying said brake, and a circuit from said devices to the lamp circuit whereby the close of the dowser breaks the circuit to the motor and closes the circuit to the lamp and brake.

6. In a motion picture apparatus, the combination with a dowser, and a double circuit closer actuated by the movement of the dowser; of a motor, a motor circuit connected with one pair of terminals in said circuit closer, a lamp, a lamp circuit connected with the other terminals of said circuit closer, a brake adjacent a moving part in the head of the apparatus, electrical devices for applying said brake, a circuit from said devices to the lamp circuit whereby the close of the dowser breaks the circuit to the motor and closes the circuit to the lamp and brake, and a centrifugal circuit breaker within the brake circuit and closing the same while the motor is running.

7. In a motion picture apparatus, the combination with a dowser, and a double circuit closer actuated by the movement of the dowser; of a motor, a motor circuit connected with one pair of terminals in said circuit closer, a brake adjacent a moving part in the head of the apparatus, electrical devices for applying said brake, a circuit from said devices to said circuit closer whereby the close of the dowser breaks the circuit to the motor and closes the circuit to the brake, and a centrifugal circuit breaker within the brake circuit and closing the same while the motor is running.

8. In a motion picture apparatus, the combination with a dowser whose shutter is carried by an arm, a shaft on which the latter is mounted, and a catch for engaging the tail of the arm when the dowser is raised; of a roller of insulating material fast on said shaft and having a metallic plate inset along one face, a pair of fingers adapted to be engaged by the plate when the dowser is raised, a second pair of fingers adapted to be engaged by the plate when the dowser is lowered, circuits leading respectively from said pairs of fingers, and separate instrumentalities in said circuits actuated according to the position of the dowser.

9. In a motion picture apparatus, the combination with a dowser whose shutter is carried by an arm, a shaft on which the latter is mounted, and a catch for engaging the tail of the arm when the dowser is raised; of a roller of insulating material fast on said shaft and having a metallic plate inset along one face, a pair of fingers beneath said roller adapted to be engaged by the plate when the dowser is raised, a second pair of fingers above said roller and adapted to be engaged by the plate when the dowser is lowered, a circuit leading from one pair of fingers to a motor, and a circuit leading from the other pair of fingers to a lamp whereby the descent of the dowser closes the circuit through the lamp and ignites it and opens the circuit through the motor and stops its movement, and the rise of the dowser effects the reverse.

10. In a motion picture apparatus, the combination with a dowser, and a double circuit closer actuated by the movement of the dowser; of a motor, a motor circuit connected with one pair of terminals in said circuit closer, a brake adjacent a moving part in the head of the apparatus, electrical devices for applying said brake, and a circuit from said devices to said circuit closer whereby the close of the dowser breaks the circuit to the motor and closes the circuit to the brake.

11. In a motion picture apparatus, the combination with a dowser whose shutter is carried by an arm, a shaft on which the latter is mounted, and a catch for engaging the

tail of the arm when the dowser is raised; of a roller of insulating material fast on said shaft and having a metallic plate inset along one face, a pair of fingers adapted to be engaged by the plate when the dowser is raised, a second pair of fingers adapted to be engaged by the plate when the dowser is lowered, circuits leading respectively from said pairs of fingers, and separate instrumentalities in said circuits actuated according to the position of the dowser.

12. In a motion picture apparatus, film-advancing mechanism, a brake for the same, and a film controlled dowser controlling the application of the brake.

13. In a motion picture apparatus, film-advancing mechanism, a brake for the same, means for applying the brake, and a film-controlled dowser controlling the operation of the brake applying means.

14. In a motion picture apparatus, film-advancing mechanism, a brake for the same, electro-magnetic means for applying the brake, and a film-controlled dowser controlling the operation of the brake applying means.

15. In a motion picture apparatus, film-advancing mechanism, a brake for the same, film controlled means for applying the brake, said means including a speed controlled device for insuring application of the brake until the said mechanism is substantially checked.

16. In motion picture apparatus, film-advancing mechanism, a dowser, a brake for stopping the operation of said mechanism, means controlled by the dowser for applying the brake, and centrifugal means for preventing release of the brake until said mechanism is substantially stopped.

In testimony whereof we affix our signatures in presence of two witnesses.

ELIE B. HULSEY.
JOHN A. D. HERRINGTON.

Witnesses:
N. L. COLLAMER,
JOHN L. FLETCHER.