COMMONWEALTH OF AUSTRALIA

The Patents Act 1952

CONVENTION APPLICATION FOR A PATENT

619322

We, PHILIP MORRIS PRODUCTS INC., of 3601 Commerce Road, Richmond, Virginia 23234, United States of America, hereby apply for the grant of a Patent for an invention entitled "SMOKING ARTICLE" which is described in the accompanying complete specification.

This application is a Convention application and is based on the Application Numbered 223,153 for a patent or similar protection made in the United States of America on 22nd July, 1988; and on the Application Numbered 315,822 for a patent or similar protection made in the United States of America on 27th January, 1989.

Our address for service is care of CALLINANS, Patent Attorneys, of 48 Bridge Road, Richmond, 3121, Victoria, Australia.

D A T E D this 21st day of July, 1989.

PHILIP MORRIS PRODUCTS INC.

By its Patent Attorneys:

CALLINANS

M.0 10924 210789

To: The Commissioner of Patents.

COMMONWEALTH OF AUSTRALIA

The Patents Act 1952

DECLARATION IN SUPPORT

of the (Convention) Application made by:

PHILIP MORRIS PRODUCTS INC., of 3601 Commerce Road, Richmond, Virginia 23234, United States of America

(hereinafter termed "the applicant ") for a patent ~~(of addition)~~ for an invention entitled

"Smoking Article"

I/~~We~~ JOHN VAN HARN

of 3601 Commerce Road, Richmond, Virginia 23234, USA

do solemnly and sincerely declare as follows:

I am/~~We are~~ the applicant , ~~or~~

I am/~~We are~~ authorised by the applicant to make this declaration on its/~~their~~ behalf.

The basic application s as defined by sections 141 and 142 of the Act ~~was/~~were made

~~in~~ United States of America on 22nd July, 1988

~~in~~ United States of America on 27th January, 1989

~~in~~ ~~on~~

~~by~~ the inventors listed below

The basic application s referred to in this paragraph ~~is/~~are the first application s made in a Convention country in respect of the invention the subject of the application.

~~I/We am/are~~

~~or~~ Mark A. SERRANO, Kenneth S. HOUGHTON, Edward B. SANDERS, A. Clifton LILLY,Jr., Charles R. HAYWARD, John Robert HEARN, D.Bruce LOSEE, Jr., and Harry V. LANZILLOTTI , of (please see over)

~~is/~~are the actual inventor s of the invention and the facts upon which the applicant is/~~are~~ entitled to make the application are as follows: by virtue of an assignment signed by the inventors between 21st February, 1989 and 23rd February, 1989 the inventors assigned the invention to the applicant.

Declared at Richmond, Virginia USA this 18th day of September 1989

Signed: John Van Harn

John Van Harn, Vice President

(12) PATENT ABRIDGMENT (11) Document No. AU-B-38816/89
(19) AUSTRALIAN PATENT OFFICE (10) Acceptance No. 619322

(54) Title
SMOKING ARTICLE

International Patent Classification(s)
(51)[4] A24D 001/00
(51)[5] A24D 001/12

(21) Application No. : 38816/89 (22) Application Date : 21.07.89

(30) Priority Data

(31) Number	(32) Date	(33) Country
223153	22.07.88	US UNITED STATES OF AMERICA
315822	27.01.89	US UNITED STATES OF AMERICA

(43) Publication Date : 25.01.90

(44) Publication Date of Accepted Application : 23.01.92

(71) Applicant(s)
PHILIP MORRIS PRODUCTS INC.

(72) Inventor(s)
MARK A. SERRANO; KENNETH S. HOUGHTON; EDWARD B. SANDERS; A. CLIFTON LILLY JR.; CHARLES R. HAYWARD; JOHN ROBERT HEARN; D. BRUCE LOSEE JR.; HARRY V. LANZILLOTTI

(74) Attorney or Agent
CALLINAN LAWRIE , Private Bag 7, KEW VIC 3101

(56) Prior Art Documents
AU 603753 27513/88 A24D 1/00
AU 584307 31478/84 A24D 1/00
AU 402027 55508/65 33.4

(57) Claim

1. A smoking article having a mouth end and a distal end remote from said mouth end, said smoking article comprising:

an active element at said distal end in fluid communication with said mouth end, said active element comprising:

a substantially non-combustible substantially cylindrical hollow sleeve having internal and external walls, and having a first end at said distal end and a second end ~~closer to said mouth~~ opposite said first end,

a heat source contained in said sleeve adjacent said first end, said heat source having a fluid passage therethrough, and

a flavor bed in said sleeve adjacent said second end thereof; said smoking article characterized in that:

said flavor bed is in radiative and convective heat transfer relationship with said heat source; and

.../2

said sleeve is air-permeable adjacent said heat source for admitting air to support combustion of said heat source, and is air-impermeable adjacent said flavor bed to prevent combustion of material in said flavor bed; whereby:

when said heat source is ignited and air is drawn through said smoking article, air is heated as it ~~passes~~ is drawn through said fluid ~~passage~~ said heated air flowing through said flavor bed, releasing a flavored aerosol, and carrying it to said mouth end.

Australia 619322

Form 10

PATENTS ACT 1952

COMPLETE SPECIFICATION

(ORIGINAL)

FOR OFFICE USE

Short Title:

Int. Cl:

Application Number:
Lodged:

Complete Specification—Lodged:
Accepted:
Lapsed:
Published:

Priority:

Related Art:

TO BE COMPLETED BY APPLICANT

Name of Applicant: PHILIP MORRIS PRODUCTS INC.

Address of Applicant: 3601 Commerce Road, Richmond, Virginia 23234, United States of America

Actual Inventor: MARK A. SERRANO, KENNETH S. HOUGHTON, EDWARD B. SANDERS, A. CLIFTON LILLY Jr., CHARLES R. HAYWARD, JOHN ROBERT HEARN, D. BRUCE LOSEE Jr. and HARRY VINCENT LANZILLOTTI

Address for Service: CALLINAN S[redacted] Patent Attorneys, of 48-50 Bridge Road, Richmond, State of Victoria, Australia.

Complete Specification for the invention entitled: "SMOKING ARTICLE"

The following statement is a full description of this invention, including the best method of performing it known to me:—*

---

* Note: The description is to be typed in double spacing, pica type face, in an area not exceeding 250 mm in depth and 160 mm in width, on tough white paper of good quality and it is to be inserted inside this form.

PM-1322 FOREIGN

SMOKING ARTICLE

Background of the Invention

This invention relates to smoking articles which produce substantially no visible sidestream smoke. More particularly, this invention relates to a smoking article in which the sensations associated with the smoking of tobacco are achieved without the burning of tobacco.

A substantial number of previous attempts have been made to produce a smoking article which produces an aerosol or vapor for inhalation, rather than conventional tobacco smoke. For example, according to one previous attempt, a smoking article is made of a charcoal rod and a separate carrier impregnated with flavorants and a synthetic "smoke" forming agent which is heated by the burning charcoal rod. The charcoal rod is coated with a concentrated sugar solution so as to form an impervious layer during burning. It was thought that this layer would contain the gases formed during smoking and concentrate the heat thus formed.

Another smoking article employs burning tobacco in the form of a conventional cigarette to heat a metallic cylinder containing a source of nicotine, such as reconstituted tobacco or tobacco extract. During smoking, the vapors released from the material inside the metal tube mix with air

inhaled through an open end of the tube which runs to the burning end of the smoking article. Ellis et al. U.S. Patent 3,356,094 shows a similar smoking article in which the tube becomes frangible upon heating, so that it would break off and not protrude when the surrounding tobacco had burned away.

A third smoking article produces a nicotine-containing aerosol by heating, but not burning, a flavor generator. The flavor generator could be fabricated from a substrate material such as almumina, natural clays and the like, or tobacco filler. The flavor generator is impregnated with thermally releasable flavorants, including nicotine, glycerol, menthol and the like. Heating of the flavor generator is provided by hot gases formed as a result of the combustion of a fuel rod of pyrolized tobacco or other carbonaceous material.

A fourth smoking article is a variation of the third smoking article, but employing a short fuel element. The performance of the article is said to be improved by maximizing heat transfer between the fuel element and the aerosol generator. This is effected by preventing heat loss by insulation, and by enhancing heat transfer between the burning fuel and the flavor generator by a metallic conductor. A spun glass fiber insulator surrounds the fuel element and aerosol generator assembly.

The fourth smoking article suffers from a number of drawbacks. First, the resilient glass fiber insulating jacket is difficult to handle on modern mass production machinery. Second, the glass fibers may become dislodged during shipping and migrate through the pack to rest on the mouth end of the article, giving rise to the potential for the inhalation of glass fibers into the smoker's mouth. Additionally, the use of a metallic heat conductor may be somewhat inefficient because the conductor

itself absorbs much of the heat produced by the fuel element.

Summary of the Invention

In accordance with this invention, there is provided a smoking article having a mouth end and a distal end remote from said mouth end, said smoking article comprising:

an active element at said distal end in fluid communication with said mouth end, said active element comprising:

a substantially non-combustible substantially cylindrical hollow sleeve having internal and external walls, and having a first end at said distal end and a second end opposite said first end,

a heat source contained in said sleeve adjacent said first end, said heat source having a fluid passage therethrough, and

a flavor bed in said sleeve adjacent said second end thereof; said smoking article characterized in that:

said flavor bed is in radiative and convective heat transfer relationship with said heat source; and

said sleeve is air-permeable adjacent said heat source for admitting air to support combustion of said heat source, and is air-impermeable adjacent said flavor bed to prevent combustion of material in said flavor bed; whereby:

when said heat source is ignited and air is drawn through said smoking article, air is heated at it is drawn through said fluid passage, said heated air flowing through said flavor bed, releasing a flavored aerosol, and carrying it to said mouth end.

Brief Description of the Drawings

The advantages of the invention will be apparent upon consideration of the following detailed description, taken in conjunction with the accompanying drawings, in which like reference characters refer to like parts throughout, and in which:

Fig. 1 is an exploded perspective view of a first preferred embodiment of a smoking article according to the present invention;

Fig. 2 is a longitudinal cross-sectional view of the smoking article of Fig.

AUSTRALIAN PATENT OFFICE

1, taken from line 2-2 of Fig. 1;

Fig. 3 is an end view of the smoking article of Figs. 1 and 2, taken from line 3-3 of Fig. 2;

AUSTRALIAN PATENT OFFICE

FIG. 4 is a radial cross-sectional view of the smoking article of FIGS. 1-3, taken from line 4-4 of FIG. 2;

FIG. 5 is a radial cross-sectional view of the smoking article of FIGS. 1-4, taken from line 5-5 of FIG. 2;

FIG. 6 is a radial cross-sectional view of the smoking article of FIGS. 1-5, taken from line 6-6 of FIG. 2;

FIG. 7 is an exploded perspective view of the active element of the smoking article of FIGS. 1-6;

FIG. 8 is a longitudinal cross-sectional view of the active element of the smoking article of FIGS. 1-7 taken from line 8-8 of FIG. 7;

FIG. 9 is a diagram of testing apparatus for measuring permeability of smoking articles according to the invention;

FIG. 10 is a longitudinal cross-sectional view of a second preferred embodiment of a smoking article according to the invention;

FIG. 11 is a radial cross-sectional view of the smoking article of FIG. 10, taking from line 11-11 of FIG. 10;

FIG. 12 is an exploded perspective view of the active element of the smoking article of FIGS. 10-11; and

FIG. 13 is a longitudinal cross-sectional view of the active element of the smoking article of FIGS. 10-12, taken from line 13-13 of FIG. 12.

Detailed Description of the Invention

A first preferred embodiment of a smoking article according to the present invention is shown in FIGS. 1-8. Smoking article 10 consists of an active element 11 and an expansion chamber tube 12,

overwrapped by cigarette wrapping paper 14, and a filter element 13 attached by tipping paper 205. Wrapping paper 14 preferably is a cigarette paper treated to minimize thermal degradation, such as a magnesium oxide, or other suitable refractory type, cigarette paper. As discussed in more detail below, active element 11 includes a carbon heat source 20 and a flavor bed 21 which releases flavored vapors and gases when contacted by hot gases flowing through the heat source. The vapors pass into expansion chamber tube 12, forming an aerosol which passes to mouthpiece element 13, and thence into the mouth of a smoker.

Carbon heat source 20 preferably is substantially pure carbon, preferably with some catalysts or burn additives. Carbon heat source 20 preferably is formed from charcoal and has one or more longitudinal passageways therethrough. These longitudinal passageways preferably are in the shape of multi-pointed stars having long narrow points and a small inside circumference. Carbon heat source 20 has a void volume greater than about 50% with a pore size between the charcoal particles of about one to about 2 microns. Carbon heat source 20 has a weight of about 81 mg/10 mm and a density between about 0.2 g/cc and about 1.5 g/cc. The BET surface area of the charcoal particles used in carbon heat source 20 is in the range of about 50 m^2/g to about 2000 m^2/g.

Flavor bed 21 can include any material that releases desirable flavors and other compounds when contacted by hot gases. In a smoking article, the flavors and other compounds may be those associated with tobacco, as well as other desirable flavors. Thus, suitable materials for flavor bed 21 may include tobacco filler or an inert substrate on which desirable compounds have been deposited. In a preferred

embodiment, flavor bed 21 is a packed bed of pelletized tobacco. The pellets are preferably formed by combining in an extruder particularized tobacco materials having a size of from about 20 mesh to about 400 mesh, preferably about 150 mesh, an aerosol precursor, for example, glycerine, 1,3-butanediol or propylene glycol, that can be widely dispersed among the tobacco particles, and a finely divided filler material, for example, calcium carbonate or alumina, to increase the thermal load to prevent the hot gases from raising the temperature of the pellets above their thermal decomposition temperature. The materials are mixed to form a mixture, and the mixture is extruded out a die typically having a plurality of orifices into spaghetti-like strands of about the same diameter. The extruded strands are cut into lengths, preferably of uniform length. The pellets preferably are uniformly dimensioned and comprise a mixture of about 15% to about 95% tobacco material, about 5% to about 35% aerosol precursor, and about 0% to about 50% filler material.

Given sufficient oxygen, as discussed in more detail below, heat source 20 will burn to produce mostly carbon dioxide. As also discussed below, radiant energy reflector sleeve 22 of active element 11 is substantially non-combustible, and does not burn during smoking of article 10. Further, article 10 is constructed in such a way that the gases flowing through flavor bed 21 have a reduced oxygen content, also discussed below, so that the constituents of flavor bed 21 undergo pyrolysis and not combustion even if their temperature is high enough to ignite them otherwise. There is substantially no visible sidestream smoke when article 10 is smoked.

Turning to the details of the construction of article 10, active element 11 is housed in a com-

posite sleeve including radiant energy reflector sleeve 22 and, preferably, an inner sleeve 23 within radiant energy reflector sleeve 22. (As used herein, unless otherwise indicated, the word "sleeve" refers to the composite sleeve.) Inner sleeve 23 is folded to provide a lip 24 which holds carbon heat source 20 suspended away from the interior wall of radiant energy reflector sleeve 22, leaving an annular space 25. Flavor bed 21 is held within inner sleeve 23 between lip 24 and heat source 20 on one end, and a screen-like clip 26, which holds in the pellets of bed 21 while allowing the aerosol to pass through into expansion chamber tube 12, on the other end. Expansion chamber tube 12 gives article 10 the length, and thus the appearance, of an ordinary cigarette. The mouth end portion 120 of inner sleeve 23 extends beyond the mouth end of radiant energy reflector sleeve 22 and fits into expansion chamber tube 12. Wrapper 14 holds active element 11 and expansion chamber tube 12 together. Preferably, cigarette wrapping paper 14 will have sufficient porosity to allow air to be admitted through paper 14 and radiant energy reflector sleeve 22 to support combustion of heat source 20. Alternatively, paper 14 may be perforated, such as by laser perforation, in the region of radiant energy reflector sleeve 22 which surrounds heat source 20.

Preferably, aluminum insert 27, fitted into inner sleeve 23 behind clip 26, closes off the mouth end of active element 11, leaving only an orifice 28 for the passage of the hot vapors. Passage through orifice 28 causes the hot vapors to increase their velocity and then expand into expansion chamber tube 12. Expansion of the vapors and gases into the expansion chamber causes cooling of the saturated vapors to form a stable aerosol, thereby minimizing condensation on either of mouth-

piece segments 29, 200, increasing the delivery of aerosol to the smoker. The degree of expansion, and therefore of cooling, may be controlled by varying the size of orifice 28 and the volume of expansion chamber 12.

Mouthpiece element 13 may be a hollow tube or may include a filter segment 29. Mouthpiece element 13 preferably includes two mouthpiece segments 29, 200. Mouthpiece segment 29 is a cellulose acetate filter plug 201 wrapped in plug wrap 202. Segment 200 is a rod of tobacco filler, wrapped in plug wrap 203, which, in addition to further cooling the aerosol and providing some filtration, may impart additional tobacco taste. The tobacco filler in segment 200 is preferably cut at the standard 30 cuts per inch, but may be coarser to minimize filtration. For example, the tobacco filler may be cut at about 15 cuts per inch. The two segments 29, 200 of mouthpiece element 13 are jointly overwrapped by plug wrap 204, and the entire mouthpiece element 13 is attached to the remainder of article 10 by tipping 205.

Returning to the structure of active element 11, annular space 25 is provided so that there is sufficient air flow to heat source 20 to allow for sustained combustion and so that conduction of heat to the outside is minimized. For the former reason, radiant energy reflector sleeve 22 is perforated and preferably has at least about 9.5% open area and a permeability of about 9.1 to about 15.1, measured as follows:

A permeability test apparatus 90 as shown in FIG. 9 is assembled from tubing sections 91, 92, 93, 94 all having the same diameter as radiant energy reflector sleeve 22, which is integrated into apparatus 90. Nitrogen gas is pumped into opening

95 at a rate of 2 liters per minute. Opening 96 is open to the atmosphere. Gas is pumped out of opening 97 at a rate of 1 liter per minute. Because resistance to the flow of air through the wall of sleeve 22 is less than that through the tubing of apparatus 90, air will be drawn in through the wall of radiant energy reflector sleeve 22 and out through opening 97 along with a quantity of nitrogen gas. A mass spectrometer probe 98 is positioned at the end of tube section 93 below tube section 94, and is connected by cable 99 to mass spectrometer 900. Cable 99 passes out of tube 94 at 901. The opening through which cable 99 passes is sealed so that no oxygen enters apparatus 90 except through the wall of radiant energy reflector sleeve 22. The permeability of radiant energy reflector sleeve 22 is defined as the number of milliliters of oxygen per minute per square centimeter of surface area of the outer wall of radiant energy reflector sleeve 22 detected by probe 98 as determined by mass spectrometer 900.

The permeability of radiant energy reflector sleeve 22 determines the mass burn rate of heat source 20. It is desirable for article 10 to provide about 10 puffs under FTC conditions (a two-second, thirty-five milliliter puff taken once a minute). If the mass burn rate of heat source 20 is too high, each puff taken by a smoker will deliver added flavor because the gases reaching flavor bed 21 will be hotter. However, because more of heat source 20 is consumed in each puff, heat source 20 may be consumed in fewer than 10 puffs. Similarly, if the mass burn rate is too low, more than 10 puffs will be available, but each will deliver less flavor because the gases will be cooler. In addition, if the mass burn rate is too low, heat source 20 may extinguish before the smoker is ready to take another puff. A preferable mass burn rate has been found to be between about

9 mg/min and about 11 mg/min. To achieve such a range of mass burn rates, a permeability of between about 9.1 and about 15.1, measured in accordance with the method described, is preferred.

The air flow in element 11 into flavor bed 21 is through passage 206 in heat source 20. It is desirable that as large as possible a surface area of heat source 20 be in contact with the air flow to maximize the convective heat transfer to flavor bed 21, and also so that combustion is as complete as possible. For that same reason, passage 206 is not a simple cylindrical passage. Rather, it has a many-sided cross section, such as the eight-pointed star shown in the FIGURES. In fact, the surface area of passage 206 in the preferred embodiment is greater than the surface area of the outer surface of heat source 20.

In order to minimize radiative heat loss from article 10, all inner surfaces of active element 11 are reflectorized. For example, radiant energy reflector sleeve 22 can be made from metallized paper. More preferably, as seen in FIGS. 7 and 8, radiant energy reflector sleeve 22 is made up of a paper layer 70 and an inner foil layer 71. Foil layer 71 reflects heat radiated by heat source 20 back into heat source 20 to keep it hot and thus to ensure that it does not cool below its ignition temperature and become extinguished. The reflection of heat back into active element 11 also means that more heat is available for transfer to flavor bed 21.

Paper layer 70 may be made by spiral winding a paper strip or using other well-known techniques of paper tube-making. Preferably, however, paper layer 70 and foil layer 71 are passed together through a garniture, similar to that used in the making of conventional cigarettes, which forms them into a tube. In that preferred embodiment, the edges

of paper layer 70 overlap and are glued to one another. Paper layer 70 is either porous or perforated, so that the required permeability, referred to above, can be achieved. Foil layer 71 is preferably made by taking a standard 0.0015-inch aluminum foil, embossing it to provide raised holes, and then calendering it to flatten the holes so that the perforated foil is more nearly smooth. Although calendering closes up the holes somewhat, the desired permeability is achieved as long as the embossed aluminum sheet has at least 4% open area, preferably about 9.5% open area.

Although foil layer 71 reflects a substantial portion of the heat produced by heat source 20, some of the heat may escape to the outside. For that reason, the paper used in paper layer 70 preferably is modified to prevent combustion so that it does not ignite when article 10 is smoked.

Inner sleeve 23 is also reflective, made of an outer aluminum layer 80, an inner aluminum layer 81, and an intermediate paper layer 82. Inner sleeve 23 may be made by taking two identical paper/foil laminate strips and spiral winding them paper side to paper side, so that the two paper sides together form intermediate layer 82. The paper layers are preferably hard-calendered paper. In the preferred embodiment, intermediate layer 82 also includes up to three layers of a paper treated to reduce thermal degradation, such as magnesium oxide, or other suitable refractory type, cigarette paper, wound between the paper/foil laminate strips. Inner sleeve 23 is not made air permeable because flavor bed 21 is to be kept oxygen-deprived, so that no ignition of tobacco can take place which might introduce off tastes and thermal decomposition constituents to the aerosol. The foil layers 80, 81 keep air out, as well as reflecting radiant heat back in

for maximum flavor generation. Of course, air could be kept out of flavor bed 21 in other ways, such as overwrapping radiant energy reflector sleeve 22 with an air-impermeable material (not shown) in the region of flavor bed 21. Foil layers 80, 81 should be as thin as possible so that they have low heat capacity, making more heat available to flavor bed 21.

Inner sleeve 23 is folded over to make lip 24, which must be wide enough so that heat source 20 can be held securely in place.

Finally, active element 11 is provided with a reflective end cap 15 which clips over radiant energy reflector sleeve 22 but is covered by wrapper 14. Cap 15 has one or more openings 16 which allow air into active element 11. Openings 16 preferably are located at the periphery of cap 15. In the preferred embodiment, there are six equiangularly spaced openings each having a diameter of 0.080 in. Cap 15 increases the reflection of radiation back into active element 11, and also keeps heat source 20 from falling out of article 10 if it somehow becomes loose. This is important when it is considered that heat source 20 smolders at a high temperature between puffs, and is even hotter during puffs. Cap 15 also keeps in any ash that may form during burning of heat source 20.

It is preferred that article 10 have an outer diameter of 7.9 mm, similar to a conventional cigarette. Carbon heat source 20 preferably has a diameter of 4.6 mm and a length of 10.1 mm, while active element 11 preferably has an overall length of 26 mm. Mouthpiece element 13 preferably has a length of 21 mm, divided between a 10 mm cellulose acetate filter portion 29 and an 11 mm tobacco rod portion 200. Expansion chamber tube 12 preferably is 33 mm long, so that article 10 overall is 79 mm long, which is comparable to a conventional "long-

size" cigarette. In the preferred embodiments, lip 24 is 2.6 mm wide.

A second, more particularly preferred embodiment of a smoking article according to the present invention is shown in FIGS. 10-13, any views of the second embodiment which are not shown in FIGS. 10-13 being the same as the corresponding views of the first preferred embodiment.

In the embodiment 100 of FIGS. 10-13, a spacer 101 within active element 110 holds the pellets of flavor bed 21 in spaced-apart relation from the end of carbon heat source 20. It has been found that, as compared to the embodiment of FIGS. 1-8, the inclusion of spacer 101 provides more even heating of the end of the flavor bed adjacent heat source 20, because the jet of hot gases drawn through passage 206 has time to spread out before reaching flavor bed 21, so that it heats more of the end of flavor bed 21. Similarly, inclusion of spacer 101 prevents flashing of flavor bed 21 on lighting of smoking article 100. In the absence of spacer 101, flame drawn through passage 206 during lighting could cause flavor bed 21 to ignite, or flash, but with spacer 101 in place, any such flame spreads out over spacer 101. Spacer 101 preferably is a metallic -- e.g., aluminum -- disk, which preferably is blackened so that it will absorb heat from carbon heat source 20 and radiate it to flavor bed 21.

The inclusion of spacer 101 provides other advantages, as well. For example, it prevents small particles from flavor bed 21, such as broken pieces of tobacco pellets, from falling through passage 206, and obstructing the front end of smoking article 100 between end cap 15 and heat source 20, or falling out of article 100 altogether if end cap 15 is not provided. In addition, spacer 101 permits different degrees of packing of the same amount of

pellets in flavor bed 21, by moving spacer 101 closer to or further from clip 26. Different degrees of packing of flavor bed 21 give rise to different degrees of resistance-to-draw of article 100, as well as different flavor characteristics. Finally, spacer 101, which holds the pellets of flavor bed 21 away from heat source 20, also prevents migration of flavor compounds from the pellets to heat source 20, where they might undergo pyrolysis and give rise to off tastes or thermal decomposition products.

Thus it is seen that a smoking article in which a flavored aerosol releasing material is efficiently heated by a carbonaceous heat source, which avoids the potential for inhalation of glass fibers by the smoker, which minimizes heat loss to the walls of the flavor bed, and which has both the look and feel of a conventional cigarette, is provided.

The claims defining the invention are as follows:-

1. A smoking article having a mouth end and a distal end remote from said mouth end, said smoking article comprising:

an active element at said distal end in fluid communication with said mouth end, said active element comprising:

a substantially non-combustible substantially cylindrical hollow sleeve having internal and external walls, and having a first end at said distal end and a second end opposite said first ~~closer to said mouth~~ end,

a heat source contained in said sleeve adjacent said first end, said heat source having a fluid passage therethrough, and

a flavor bed in said sleeve adjacent said second end thereof; said smoking article characterized in that:

said flavor bed is in radiative and convective heat transfer relationship with said heat source; and

said sleeve is air-permeable adjacent said heat source for admitting air to support combustion of said heat source, and is air-impermeable adjacent said flavor bed to prevent combustion of material in said flavor bed; whereby:

when said heat source is ignited and air is drawn through said smoking article, air is heated as it ~~passes~~ is drawn through said fluid passage said heated air flowing through said flavor bed, releasing a flavored aerosol, and carrying it to said mouth end.

2. The smoking article of claim 1 characterized in that said heat source is suspended in said sleeve spaced from said interior wall of said

AUSTRALIAN PATENT OFFICE

sleeve, defining an annular space around said heat source.

3. The smoking article of claim 2 characterized in that said substantially non-combustible sleeve is of metallic foil and paper.

4. The smoking article of claim 3 characterized in that said metallic foil is aluminum foil.

5. The smoking article of claim 3 characterized in that said substantially non-combustible sleeve is of a rolled paper/foil laminate.

6. The smoking article of claim 3 characterized in that said paper is porous and said foil is perforated.

7. The smoking article of claim 3 characterized in that said paper is non-porous and said paper and said foil are perforated.

8. The smoking article of claim 3 characterized in that said interior wall of said sleeve is of said metallic foil, said foil reflecting heat produced by said heat source back toward said heat source, to aid in maintaining combustion thereof.

9. The smoking article of claim 2 characterized in that said sleeve further comprises a heat reflector at said interior wall thereof, for reflecting heat produced by said heat source back toward said heat source, to aid in maintaining combustion thereof.

10. The smoking article of claim 9 characterized in that said sleeve is of a paper-type material.

11. The smoking article of claim 10 characterized in that said paper-type material is spiral wound paper.

12. The smoking article of claim 11 characterized in that said paper is porous.

13. The smoking article of claim 11 characterized in that said paper is non-porous and is perforated.

14. The smoking article of claim 9 characterized in that said heat reflector is a sheet of aluminum lining said interior wall.

15. The smoking article of claim 14 characterized in that said sheet of aluminum is perforated.

16. The smoking article of claim 15 characterized in that said sleeve has a permeability of about 9.1 to about 15.1, said aluminum sheet having at least about 4% open area.

17. The smoking article of claim 9 characterized in that said sleeve has a permeability of about 9.1 to about 15.1.

18. The smoking article of claim 2 characterized in that said sleeve comprises a substantially air-impermeable inner sleeve within said sleeve adjacent said flavor bed.

19. The smoking article of claim 18 characterized in that said inner sleeve comprises a lip for receiving said heat source.

20. The smoking article of claim 13 characterized in that said inner sleeve is a laminate of a metallic foil and paper.

21. The smoking article of claim 20 characterized in that said inner sleeve comprises two metallic foil layers surrounding a paper layer.

22. The smoking article of claim 21 characterized in that said metallic foil is aluminum foil.

23. The smoking article of claim 2 further characterized by a perforated end cap at said distal end of said element, for preventing dropout from said element of said heat source and ash from the combustion thereof.

24. The smoking article of claim 23 characterized in that said end cap is reflective of radiant energy for reflecting heat back to said heat source, to aid in maintaining combustion thereof.

25. The smoking article of claim 1 further characterized by a mouthpiece element adjacent said mouth end.

26. The smoking article of claim 25 characterized in that said mouthpiece element comprises a cellulose acetate filter plug adjacent said mouth end.

27. The smoking article of claim 26 characterized in that said mouthpiece element further comprises a rod of tobacco filler adjacent an end of said filter plug remote from said mouth end.

28. The smoking article of claim 1 characterized in that said heat source is solid, ignitable and self-sustaining.

29 The smoking article of claim 1 characterized in that said heat source is substantially cylindrical.

30. The smoking article of claim 1 characterized in that said fluid passage is substantially through the center of said heat source.

31. The smoking article of claim 1 characterized in that said heat source comprises carbon.

32. The smoking article of claim 31 characterized in that said heat source comprises carbon and at least one burn additive.

33. The smoking article of claim 1 characterized in that said flavor bed comprises tobacco.

34. The smoking article of claim 33 characterized in that said flavor bed comprises a plurality of tobacco-containing pellets.

35. The smoking article of claim 1 further characterized by means for cooling said aerosol.

36. The smoking article of claim 35 characterized in that said cooling means comprises means for causing expansion of said aerosol.

37. The smoking article of claim 36 characterized in that said cooling means comprises an orifice at said second end of said active element, for passage therethrough of said aerosol, and an expansion chamber

adjacent said orifice toward said mouth end of said smoking article.

38. The smoking article of claim 1 further characterized by spacer means for maintaining said flavor bed in spaced-apart relationship with said heat source.

39. The smoking article of claim 38 characterized in that said spacer means comprises a metallic clip.

40. The smoking article of claim 39 characterized in that said metallic clip comprises aluminum.

41. The smoking article of claim 38 characterized in that said spacer means is blackened, whereby said spacer means absorbs heat from said heat source and radiates heat to said flavor bed.

42. A smoking article substantially as hereinbefore described with reference to the accompanying drawings.

D A T E D this 21st day of July, 1989.

PHILIP MORRIS PRODUCTS INC.
By its Patent Attorneys:
CALLINANS

FIG. 1

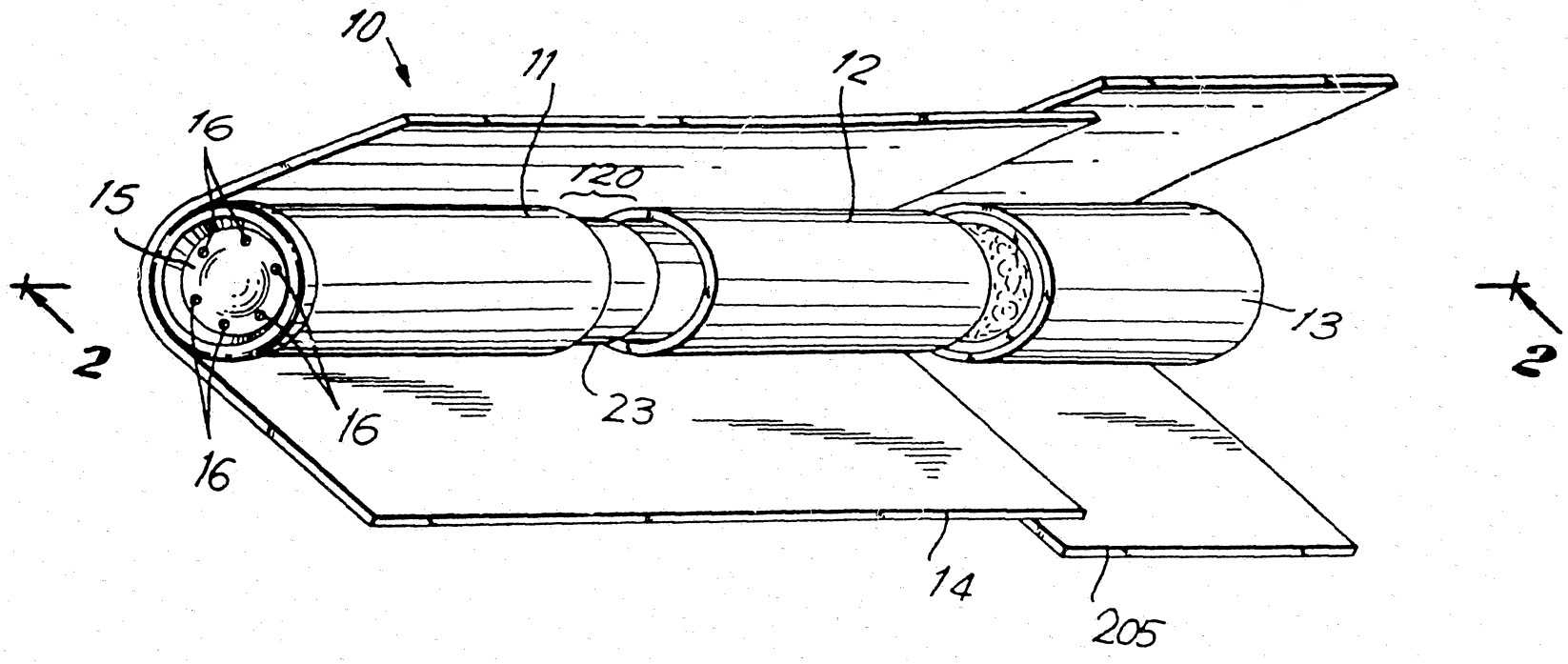

38816/89

FIG. 2

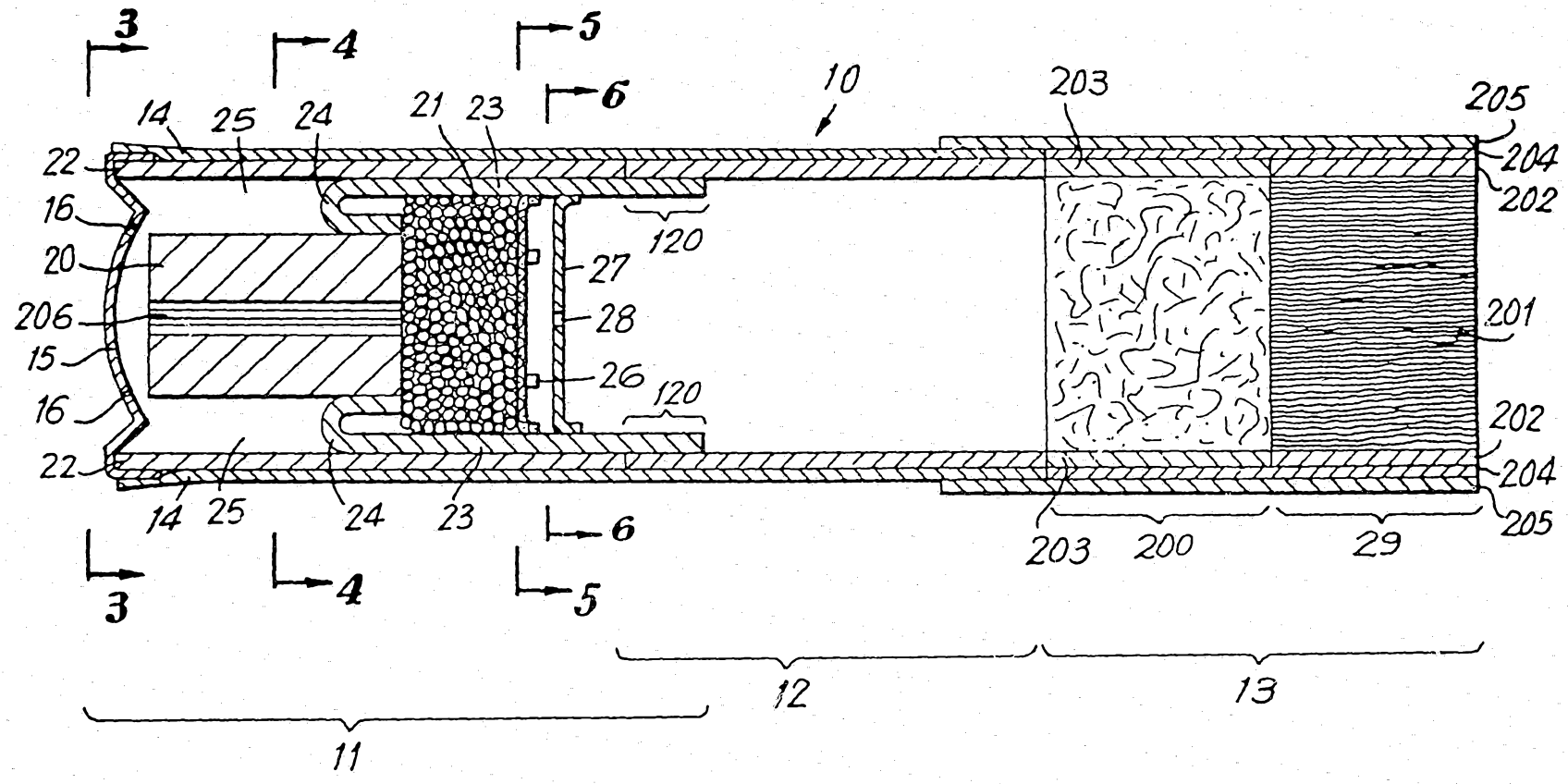
3
4
5
6
10
14
25
24
21
23
203
205
204
202
22
16
20
206
15
16
22
27
28
26
120
120
201
202
204
205
14
25
24
23
6
4
5
3
203
200
29
12
13
11

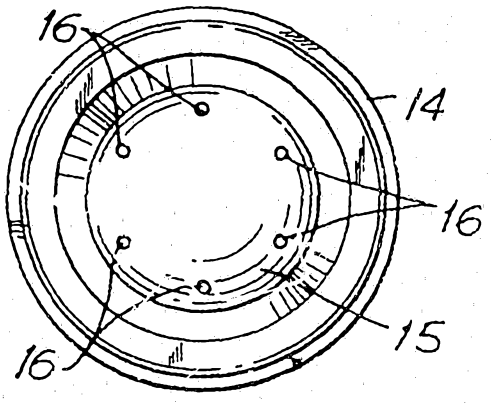

FIG. 3

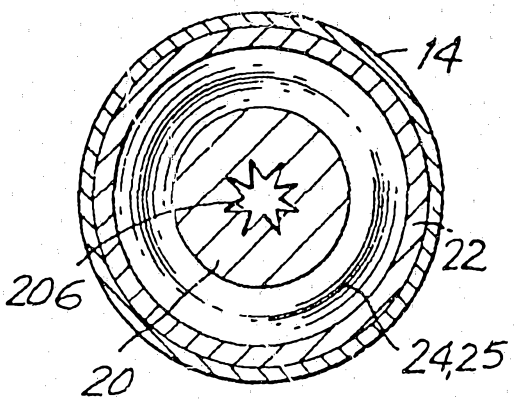

FIG. 4

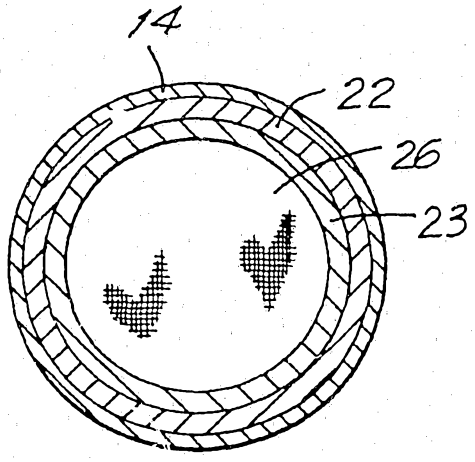

FIG. 5

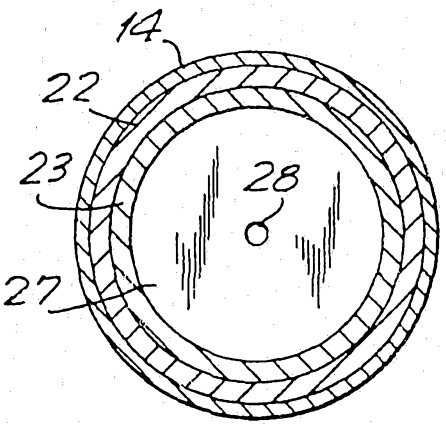

FIG. 6

FIG. 7

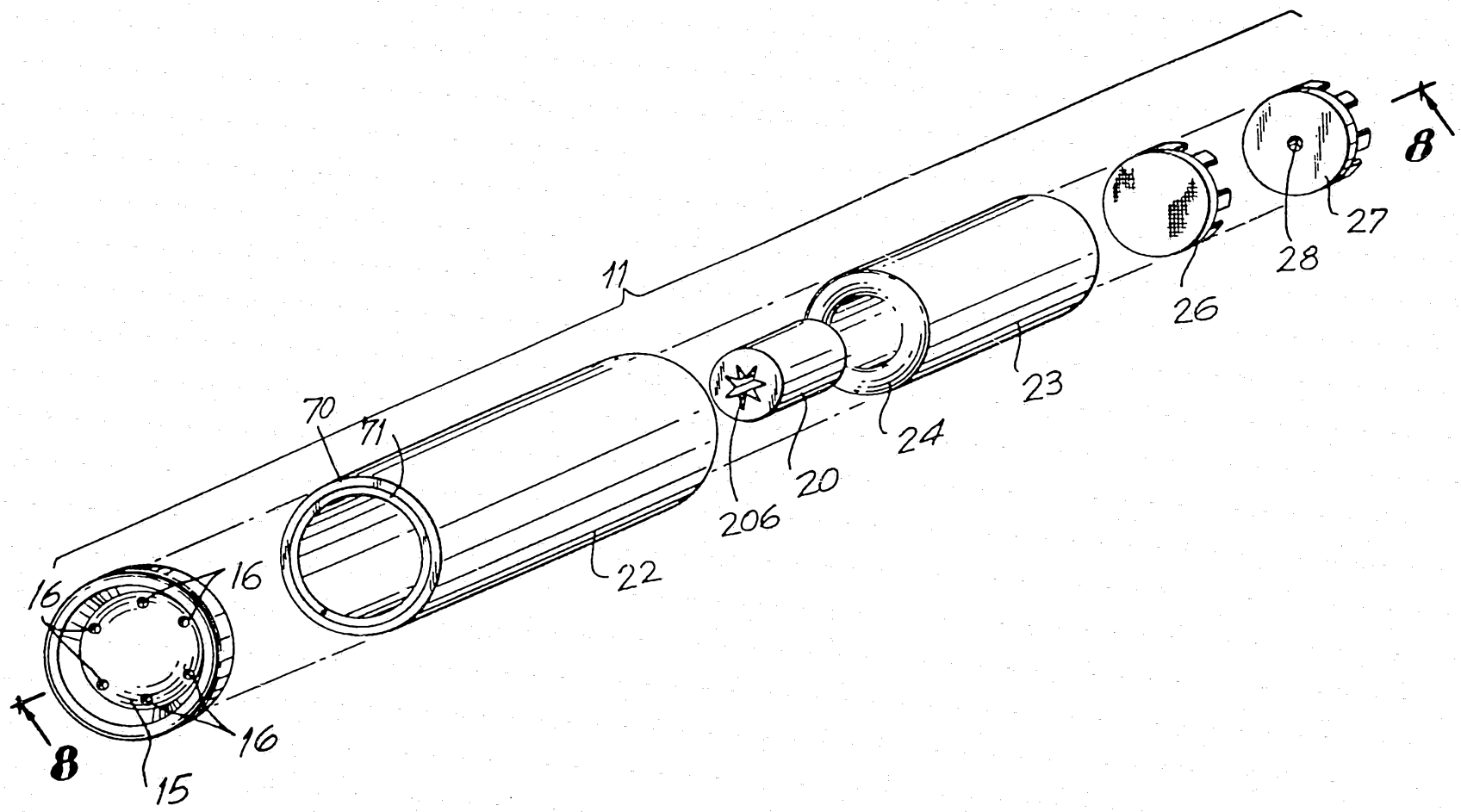

FIG. 8

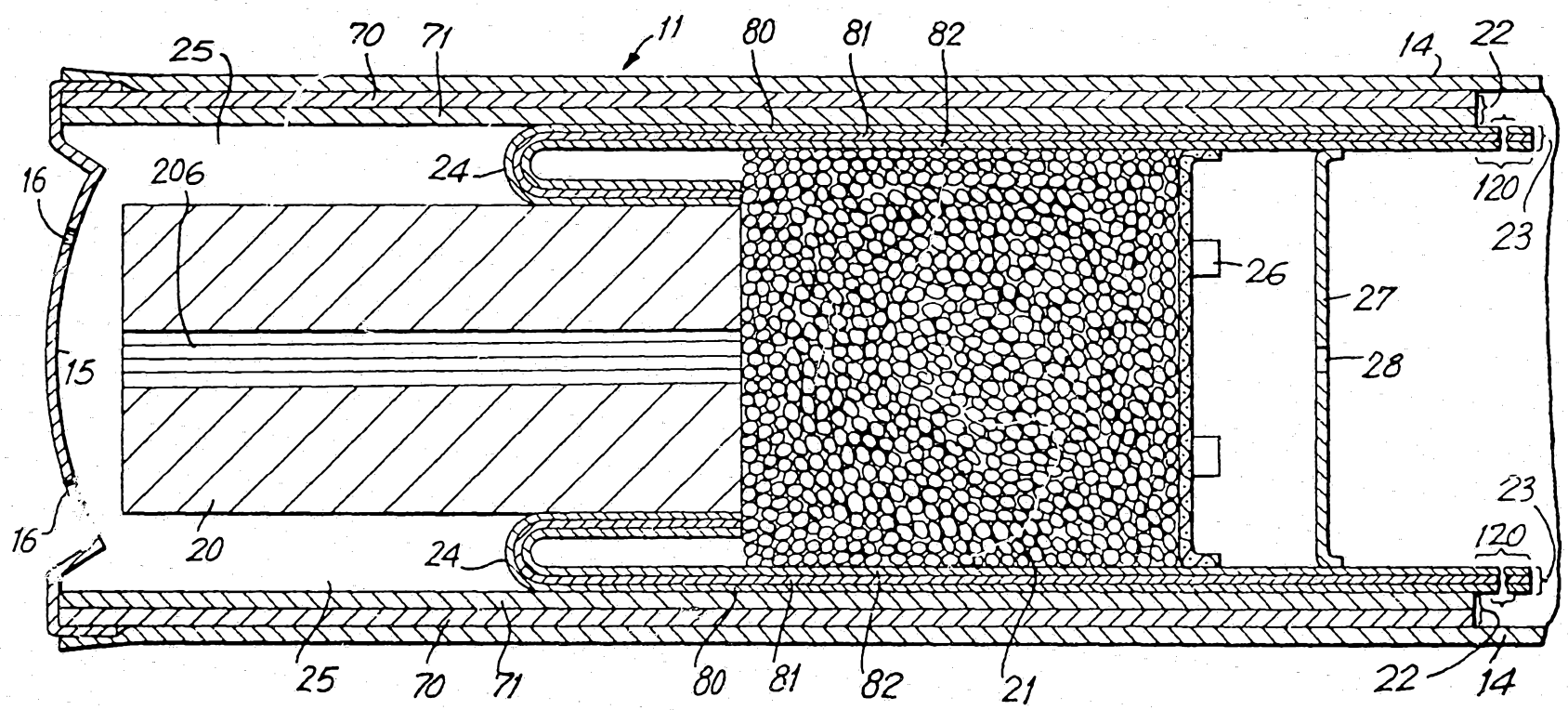
25
70
71
11
80
81
82
14
22
16
206
24
120
23
26
27
28
15
16
20
24
23
120
25
70
71
80
81
82
21
22
14

30 10 91 38816

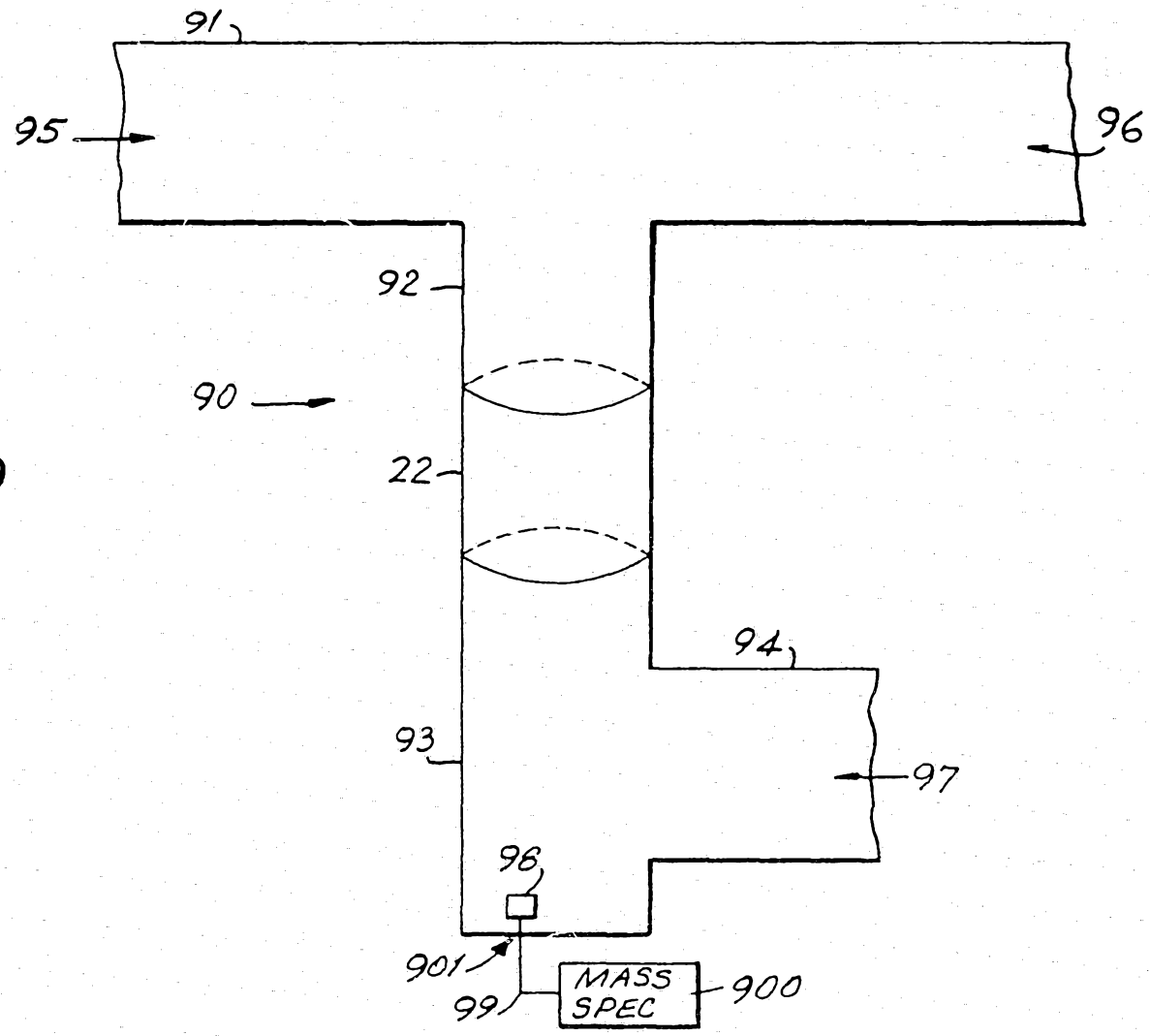

FIG. 9

FIG. 10

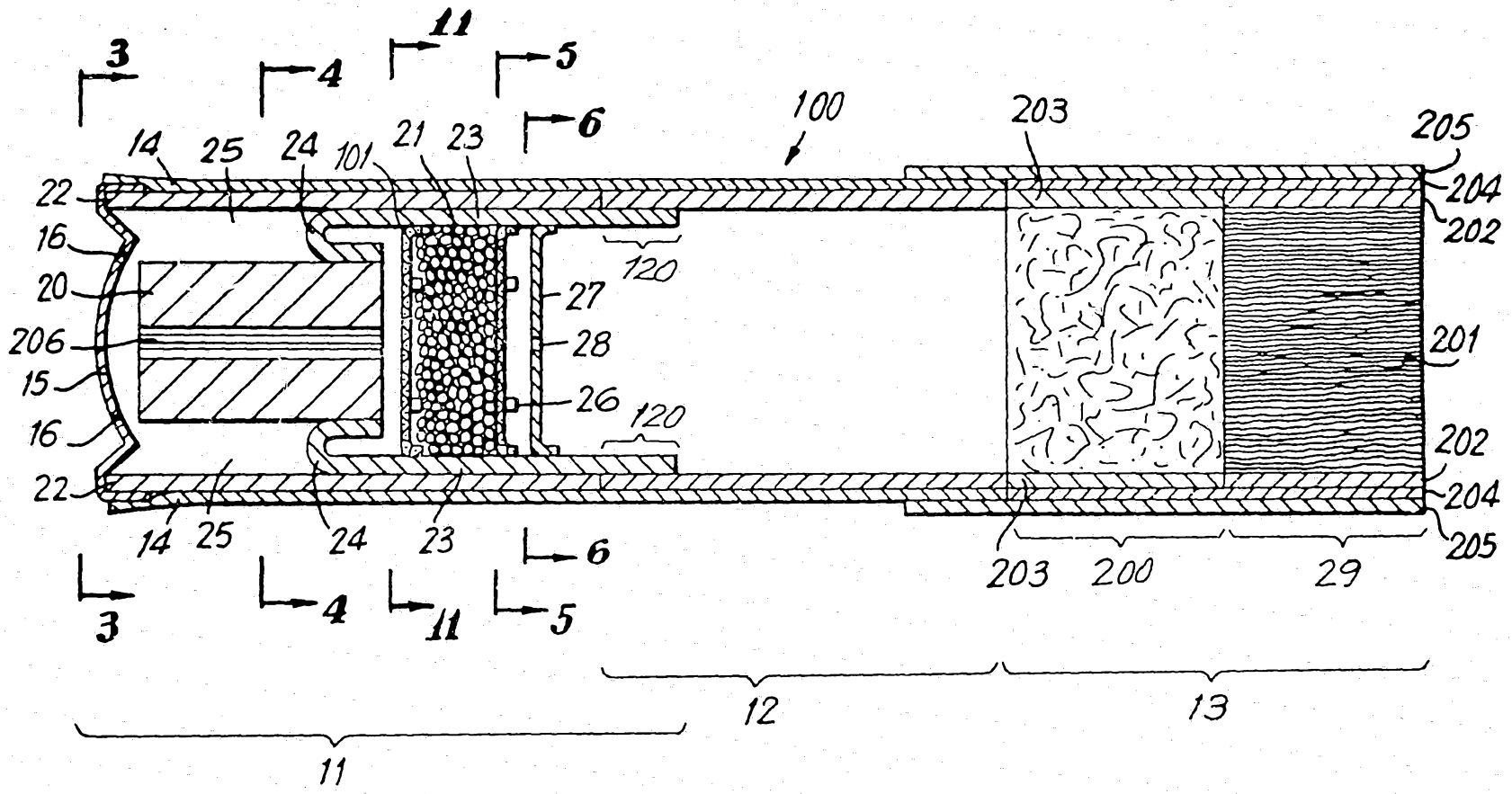
3
4
11
5
6
100
203
205
14
25
24
101
21
23
22
16
20
206
15
16
22
27
28
26
120
120
204
202
201
202
204
205
14
25
24
23
6
3
4
11
5
203
200
29
12
13
11

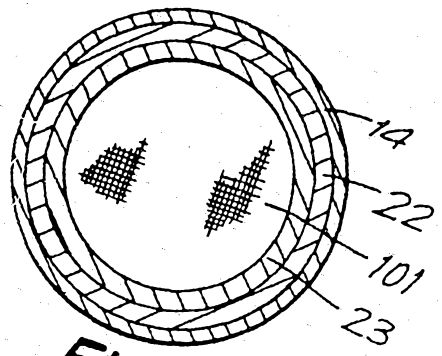
14
22
101
23

FIG. 11

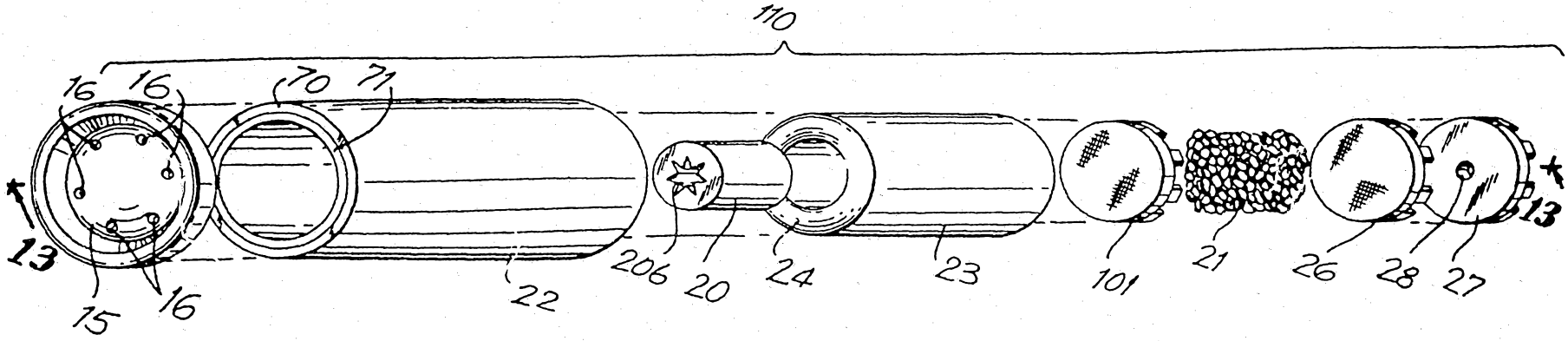
110
16
16
70
71
13
13
15
16
22
206
20
24
23
101
21
26
28
27

FIG. 12

FIG. 13

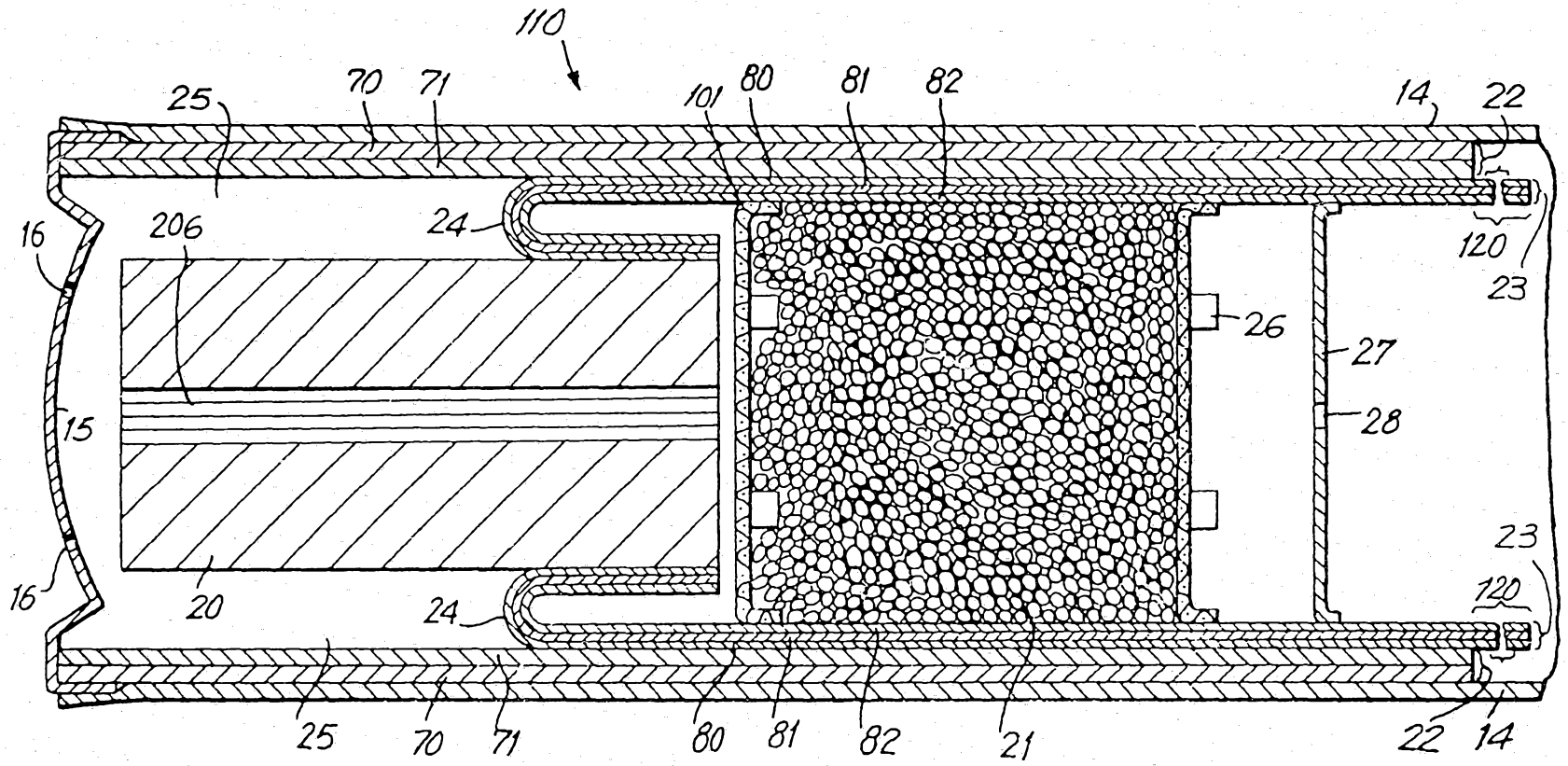
110
25
70
71
101
80
81
82
14
22
120
23
16
206
24
26
27
28
15
20
16
24
23
120
25
70
71
80
81
82
21
22
14