April 29, 1930. G. H. LELAND 1,756,692

BRUSH LIFTING MECHANISM FOR ELECTRIC MOTORS AND THE LIKE

Filed Sept. 4, 1928 2 Sheets-Sheet 1

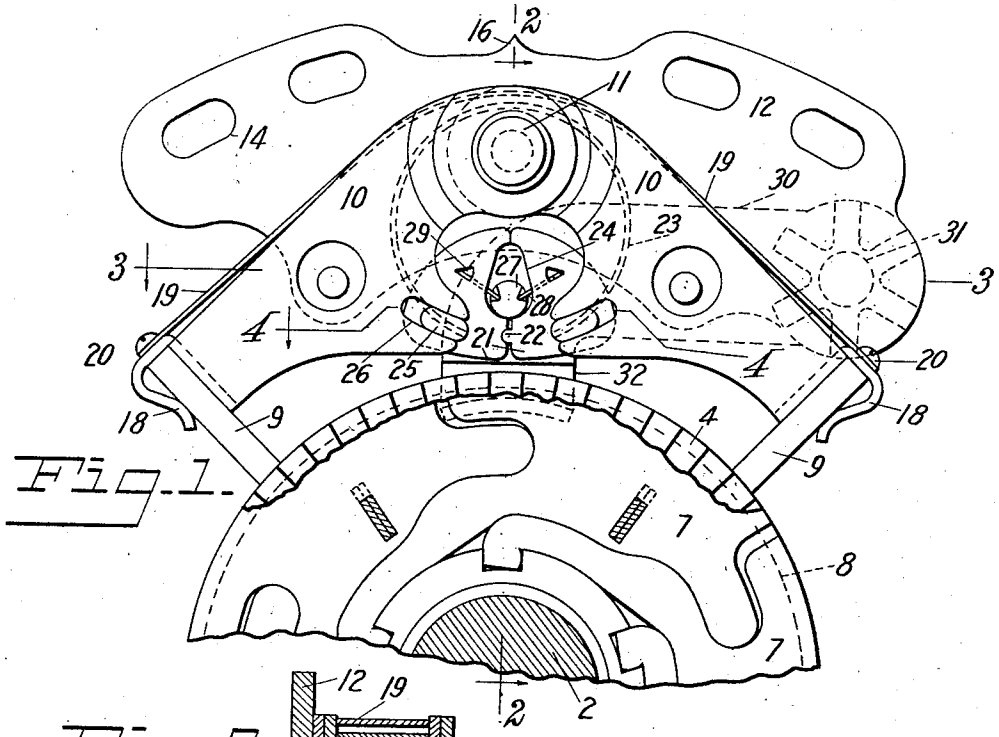

Fig. 1.

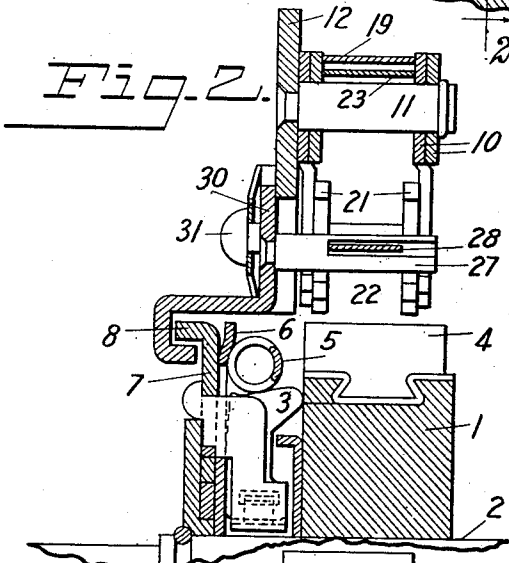

Fig. 2.

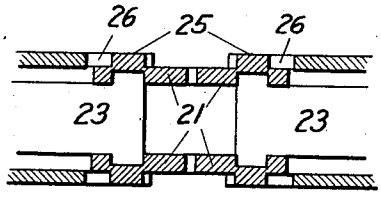

Fig. 4.

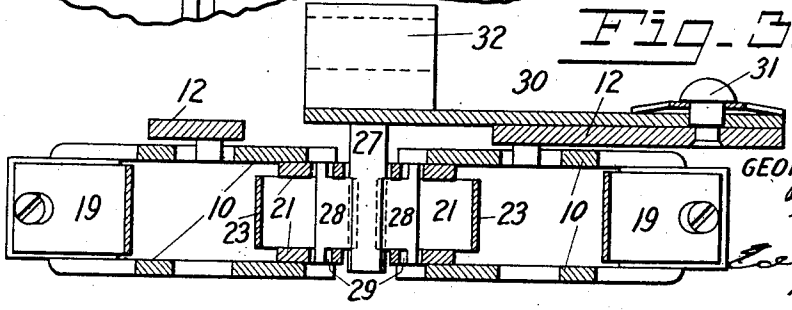

Fig. 3.

INVENTOR.
GEORGE H. LELAND.
By
ATTORNEY.

April 29, 1930. G. H. LELAND 1,756,692

BRUSH LIFTING MECHANISM FOR ELECTRIC MOTORS AND THE LIKE

Filed Sept. 4, 1928 2 Sheets-Sheet 2

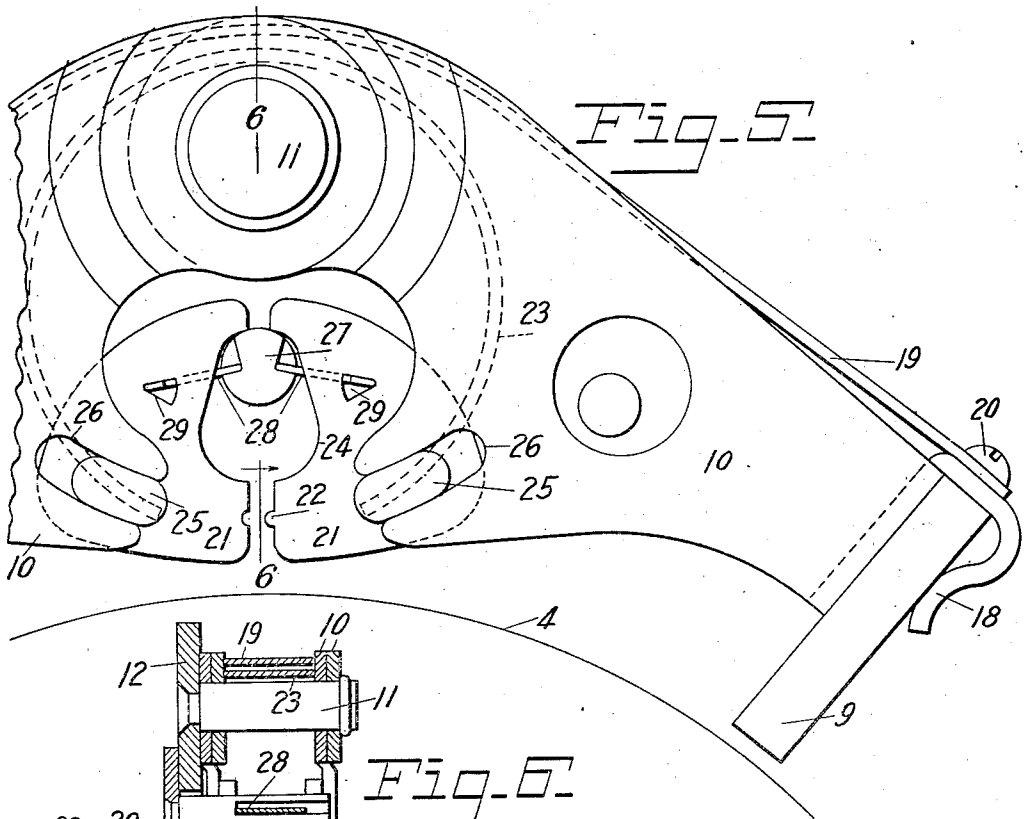

Fig. 5.

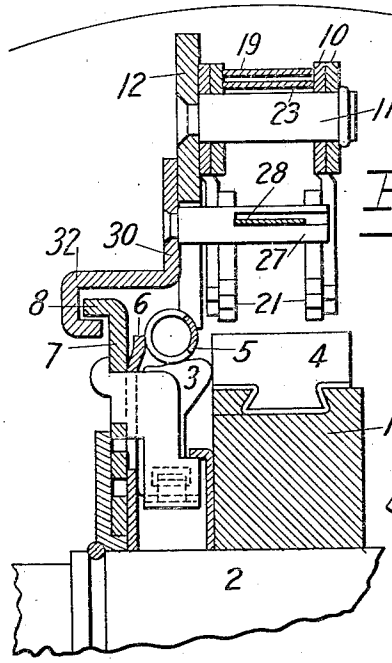

Fig. 6.

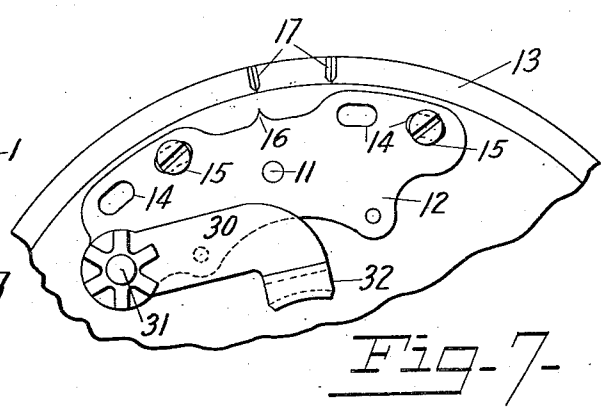

Fig. 7.

INVENTOR.
GEORGE H. LELAND.
By [signature]
ATTORNEY.

Patented Apr. 29, 1930 1,756,692

UNITED STATES PATENT OFFICE

GEORGE H. LELAND, OF DAYTON, OHIO, ASSIGNOR OF ONE-HALF TO THE LELAND ELECTRIC COMPANY, A CORPORATION OF OHIO

BRUSH-LIFTING MECHANISM FOR ELECTRIC MOTORS AND THE LIKE

Application filed September 4, 1928. Serial No. 303,681.

This invention relates to a brush lifting mechanism for electric motors and the like, and more particularly to the means for actuating a brush supporting device.

One object of the invention is to provide improved means for controlling the movement of the brush supporting device.

A further object of the invention is to provide such a controlling means which will be simple in construction, highly efficient in operation and easily operated.

Other objects of the invention will appear as the mechanism is described in detail.

In the accompanying drawings Fig. 1 is a rear elevation of a brush lifting mechanism embodying my invention, showing the brushes in contact with the commutator of the motor; Fig. 2 is a vertical section taken on the line 2—2 of Fig. 1; Fig. 3 is a horizontal section taken on the line 3—3 of Fig. 1; Fig. 4 is a horizontal section taken on the line 4—4 of Fig. 1; Fig. 5 is an enlarged elevation showing portions of the brush lifting devices and the actuating devices therefor, and showing the brushes out of contact with the commutator; Fig. 6 is a section taken on the line 6—6 of Fig. 5; and Fig. 7 is a detail view showing the manner of mounting the supporting plate on the motor casing.

In these drawings I have illustrated one embodiment of my invention and have shown the same in connection with a brush lifting mechanism similar to that shown and described in my application of July 15, 1927, Serial No. 205,287, but it will be understood that this particular embodiment has been chosen for the purposes of illustration only and that the device may take various forms and may be applied to brush lifting mechanisms of different kinds without departing from the spirit of the invention.

The invention is here illustrated in connection with a motor of the repulsion induction type, which starts as a repulsion motor and when it has gained speed is converted into an induction motor by short circuiting the commutator. I have shown portions only of the commutator 1 and the armature shaft 2 upon which the commutator is mounted. Mounted on the armature shaft, adjacent to the commutator, is a short circuiting device comprising an annular series of weights 3 controlled by centrifugal force and movable into and out of short circuiting engagement with the contact bars 4 of the commutator. A contractile band or annular spring 5 engages the outer edges of the short circuiting weights to retain the same normally in their retracted and inoperative positions. The outward movement of the weights is resisted by a shoulder on a retaining plate 6 which engages the spring 5 and prevents the outward movement of the weights until the centrifugal force has become sufficient to overcome that resistance and then move the weights quickly to their operative or short circuiting positions. Arranged on the forward side of the retaining plate 6 is a centrifugal device which controls the brush lifting mechanism in the manner hereinafter described. This centrifugal device comprises a series of weights 7 which are so connected with the short circuiting device that they will be controlled by the spring 5.

Each weight has at its outer edge a laterally extending flange 8, the several flanges being so arranged as to form a practically continuous circumferential flange for the centrifugal device.

Brushes 9 for the commutator are carried by suitable supporting devices, here shown as pivoted arms 10 which are preferably mounted on a common axis. In the present instance, both arms are pivotally mounted on a stud 11 carried by a supporting plate 12 adapted to be rigidly secured to the motor casing, a portion of which is shown at 13 in Fig. 7. This plate is adjustably mounted on the motor casing to enable the brushes to be so positioned as to cause the armature to rotate in either direction and to this end it is provided with two pairs of elongated slots 14 adapted to receive attaching screws 15, whereby it may be mounted in either of two positions and will be capable of a limited adjustment in both positions. To facilitate the location of the plate when it is to be shifted to reverse the motor it is provided with a pointer 16 cooperating with indicating marks 17 on the motor casing to indicate the correct positions for the supporting plate.

Each brush supporting arm has at its free end suitable means for securing a brush thereto, such as a bent-over portion 18 forming a resilient clip to grip the brush. A flat spring 19 is secured at its ends to the respective ends of the two arms 10 and extends above the axis or stud 11 on which the arms are mounted and thus serves to yieldably press the brushes toward the commutator. This spring is secured to the respective arms by screws 20 and thus also serves to establish the necessary electrical connection between the brushes. Means are provided for actuating the supporting arms 10 to lift the brushes out of contact with the commutator. Very slight movement is imparted to the brushes and the connection between the brush supporting arms and the actuating means therefor is such that the actuating means will pick up the arms in any position in which they may be, regardless of the length of the brushes, and impart the necessary lifting movement thereto.

In that embodiment of the invention here illustrated the actuating means comprises opposed members or plates 21, constituting separate actuating devices for the respective brush lifting arms. The two actuating members or devices 21 have pivotal contact one with the other near the lower edges thereof, as shown at 22, and are acted upon by a spring 23 which presses them one toward the other and tends to hold both the upper and lower portions thereof in contact. As here shown, the adjacent edges of the two actuating members are recessed, at 24, for a purpose which will hereinafter appear. Preferably each brush supporting arm comprises two parallel members which are spaced apart and mounted on the stud 11 and the two actuating devices are arranged between the members of the respective brush supporting arms. Each actuating device may also comprise two members rigidly connected one to the other and arranged in close proximity to the corresponding members of the adjacent brush supporting arm. Each actuating device has laterally projecting lugs 25 which extend through slots 26 in the respective brush supporting arms, said slots being curved about the common axis of the two arms. Preferably each member of each arm is provided with such a curved slot and each member of each actuating device is provided with a lug to enter the slot in the adjacent member of the corresponding arm. The lugs are noncircular in shape and preferably elongated, as shown in the drawings. Consequently when the actuating devices are in their inoperative positions, as shown in Fig. 1, the brush supporting arms are free to move with relation thereto and the brushes will be held in contact with the commutator irrespective of their length, but when the actuating devices are moved from their inoperative positions the lugs will be slightly turned in the slots and will be caused to grip the edges of the slots and thus establish an operative connection between the actuating devices and the respective arms and the further movement of the actuating devices will impart lifting movement to the brush supporting arms.

The means for controlling the movement of the actuating devices, as here shown, comprises a stud 27 which extends through the opening between the actuating devices, formed by the recesses 24, and is mounted for radial movement with relation to the commutator. Means are provided whereby the outward movement of the stud 27 will first separate the upper edges of the two actuating devices, so as to displace the lateral lugs 25 and cause the same to frictionally grip the edges of the respective slots 26 and thus establish the operative connection between the actuating devices and the arm. The further outward movement of the stud 27 will separate the two actuating devices and because of the connection which has been established between the lugs 25 and the brush lifting arms will impart lifting movement to the arms and cause the brushes to be lifted out of engagement with the commutator. In the present construction the connection between the operating member or stud 27 and the two actuating devices 21 comprises links 28, seated at their inner ends in recesses in the stud 27 and having at their outer ends lateral lugs which are seated in openings 29 in the respective actuating devices. The arrangement of the links is such as to form a toggle which, when the stud is in its innermost position, will permit the two actuating devices to be moved into contact one with the other by the spring 23, and which, when the stud is moved to its outermost position, will first separate the upper edges of the two actuating devices and will then separate the lower edges of said actuating devices. When the stud is in its outermost position the inner ends of the links, or arms of the toggle, will be slightly beyond the outer ends thereof and will thus lock the actuating arms against movement by the spring 23 and will retain the stud in its outermost position until pressure is applied thereto sufficient to overcome the action of the spring 23.

The necessary radial movement may be imparted to the stud 27 in any suitable manner but this movement is preferably controlled in accordance with the speed of the motor and consequently I have, in the present instance, utilized a centrifugal device for actuating the same. As here shown, the operating member or stud 27 is mounted on the free end of a lever 30, the other end of which is pivotally mounted at 31 on the supporting member or plate 12, the length of the lever being such that the stud will move in approximately a radial line, it being understood that only a

very short movement is imparted to the stud. The lever 30 has at that end adjacent to the stud 27 a laterally extending portion which is bent upon itself to form a transverse channel 32, the open side of which is toward the commutator, and this channel is adapted to receive the lateral flange 8 of the centrifugal device above described. The arrangement is such that when the weights of the centrifugal device are in their normal or contracted positions the lever 30 and operating stud 27 will be in their innermost or inoperative positions, as shown in Figs. 5 and 6. The action of the spring 23 on the actuating devices will cause a slight further movement to be imparted to the stud 27 after the weights of the centrifugal device have completed their movement in either direction, thus carrying the wall of the channel 32 out of contact with the flange 8 of the centrifugal devices and permitting the weights to rotate freely in the channel.

The operation of the mechanism will be readily understood from the foregoing description and it will be apparent that when the motor is idle or operating at a low speed the operating member or stud 27 will be in its innermost position and the toggle arms or links will be inclined toward the axis of the commutator, thus causing the actuating devices to be held in contact one with the other and to occupy such positions that the brush supporting arms may have free movement with relation thereto, thereby enabling the brushes to be held in contact with the commutator by the spring 19 regardless of the length of the brushes. When the motor gains such speed that centrifugal force will move the weights of the centrifugal device outwardly the operating member or stud 27 is moved to its outermost position. The first portion of this movement causes a slight tilting movement to be imparted to the actuating device which in turn causes the lugs 25 to grip the edges of the slots 26 and thus establish operative connections between the actuating devices and the brush supporting arms. It will be obvious that this operative connection will be established regardless of the positions which the arms may occupy with relation to the actuating devices, thereby connecting the arms with the actuating devices regardless of the length of the brushes. The further movement of the actuating devices by the operating member or stud will cause lifting movement to be imparted to the brush supporting arms, thus lifting the brushes out of contact with the commutator and, because of the positions assumed by the toggle arms or links, causing the brush supporting arms to be retained in this position.

While I have shown and described one embodiment of my invention I wish it to be understood that I do not desire to be limited to the details thereof as various modifications may occur to a person skilled in the art.

Having now fully described my invention, what I claim as new and desire to secure by Letters Patent, is:

1. In a brush lifting mechanism for electric motors and the like comprising a movable device having means for supporting a brush for movement therewith into and out of engagement with the commutator of said motor, and an actuating device having means for connecting the same with said brush supporting device, an operating member movable in a substantially radial direction with relation to said commutator to control the movement of said actuating device, and a link to connect said operating member with said actuating device.

2. In a brush lifting mechanism for electric motors and the like comprising a movable device having means for supporting a brush for movement therewith into and out of engagement with the commutator of said motor, and an actuating device having means for connecting the same with said brush supporting device, an operating member mounted for movement in a fixed path with relation to said actuating device, and a link connecting said operating member with said actuating device and so arranged that when said operating member is moved in one direction said actuating device will move in a direction to cause said brush to engage said commutator and when said operating member is moved in the other direction said actuating device will be caused to impart lifting movement to said brush supporting device.

3. In a brush lifting mechanism for electric motors and the like comprising a movable device having means to support a brush for movement therewith into and out of engagement with the commutator of said motor, and an actuating device having means controlled by the position thereof to operatively connect the same with and disconnect the same from said brush supporting device, an operating member movable toward and from said commutator, and a link connecting said operating member with said actuating device and so arranged that when said operating member is in its inner position said actuating device will be disconnected from said brush supporting device and when said operating member is moved outwardly said actuating device will be first moved to a position to establish the connection between the same and said brush supporting device and then caused to impart lifting movement to said brush supporting device.

4. In a brush lifting mechanism for electric motors and the like comprising movable devices each having means to support a brush for movement into and out of engagement with the commutator of said motor, and devices movable in opposite directions to actuate the respective brush supporting devices, an operating member mounted for substan-

tially radial movement with relation to said commutator, links connecting said operating member with the respective actuating devices, extending transversely to the line of movement of said operating member and so arranged that the outward movement of said operating member will cause said actuating devices to be moved simultaneously in opposite directions from said line of movement, and means for imparting movement to said operating member.

5. In a brush lifting mechanism for electric motors and the like comprising movable devices each having means to support a brush for movement into and out of engagement with the commutator of said motor, and devices movable in opposite directions to actuate the respective brush supporting devices, a toggle interposed between said actuating devices, and means for actuating said toggle to cause movement to be imported to said actuating devices.

6. In a brush lifting mechanism for electric motors and the like comprising movable devices each having means to support a brush for movement into and out of engagement with the commutator of said motor, and devices movable in opposite directions to actuate the respective brush supporting devices, an operating member mounted for substantially radial movement with relation to said commutator and in a line extending between said actuating devices, centrifugally operated means to impart movement to said operating member, and links connecting said operating member with the respective actuating devices and so arranged that when said operating member is in its inner position said actuating devices will be retained in positions to permit of said brushes to engage said commutator and when said operating member is moved to its outer position said actuating devices will be caused to impart lifting movement to said brush supporting device.

7. In a brush lifting mechanism for electric motors and the like comprising movable devices each having means to support a brush for movement into and out of engagement with the commutator of said motor, and devices movable in opposite directions to actuate the respective brush supporting devices, an operating member mounted for substantially radial movement with relation to said commutator, centrifugally operated means to impart movement to said operating member, and links connecting said operating member with the respective actuating devices and so arranged that when said operating member is in its inner position said actuating devices will be retained in positions to permit of said brushes to engage said commutator and when said operating member is moved to its outer position said links will retain said operating member in said outer position.

8. In a brush lifting mechanism for electric motors and the like comprising movable devices each having means to support a brush for movement therewith into and out of engagement with the commutator of said motor, and actuating devices movable in opposite directions and having means for operatively connecting the same with and disconnecting the same from the respective brush supporting devices, a toggle interposed between said actuating devices, and means for moving said toggle in one direction to establish operative connection between said actuating devices and the respective brush supporting devices and to impart lifting movement to said brush supporting devices, and for moving said toggle in another direction to interrupt the connection between said actuating devices and said brush supporting devices.

9. In a brush lifting mechanism for electric motors and the like comprising pivoted arms extending in opposite directions, each having means for supporting a brush for movement therewith into and out of engagement with the commutator of said motor and each having a slot curved about its axis, and actuating devices having parts extending into the respective slots and so shaped that when the actuating devices are in one position said arms may move with relation thereto and when said actuating devices are in another position said parts will operatively engage the walls of the respective slots and cause said arms to move therewith, a toggle interposed between said actuating devices to control the positions thereof, and means to actuate said toggle.

10. In a brush lifting mechanism for electric motors and the like comprising pivoted arms extending in opposite directions, each having means for supporting a brush for movement therewith into and out of engagement with the commutator of said motor and each having a slot curved about its axis, and actuating devices having parts extending into the respective slots and so shaped that when actuating devices are in one position said arms may move with relation thereto and when said actuating devices are in another position said parts will operatively engage the walls of the respective slots and cause said arms to move therewith, a stud arranged between said actuating devices, means for imparting substantially radial movement to said stud, and links connecting said stud with the respective actuating devices.

In testimony whereof, I affix my signature hereto.

GEORGE H. LELAND.