United States Patent [19]

Thomanek

[11] **3,732,817**

[45] **May 15, 1973**

[54] **EXPLOSIVE BODY CONSTRUCTION**

[76] Inventor: **Franz R. Thomanek,** Sandizell 38½, Landkreis Schrobenhausen, Germany

[22] Filed: **Dec. 20, 1963**

[21] Appl. No.: **332,995**

[30] **Foreign Application Priority Data**

Jan. 24, 1963 Germany ..... B 70 464

[52] **U.S. Cl.** ..... **102/24 HC**

[51] **Int. Cl.** **F42b 3/08**

[58] **Field of Search** ..... 102/22, 24 HC

[56] **References Cited**

UNITED STATES PATENTS

2,763,210 9/1956 Church et al. ..... 102/24 HC

FOREIGN PATENTS OR APPLICATIONS

1,130,344 5/1962 Germany 102/24

Primary Examiner—Verlin R. Pendegrass

Attorney—McGlew & Toren

EXEMPLARY CLAIM

1. An explosive body construction for use with a hollow explosive charge having a cavity in the front in respect to the firing direction, comprising a frustoconically-shaped guiding sleeve having a smaller dimensioned end with an opening in said sleeve being adapted to be arranged before the hollow explosive charge in respect to the firing direction, said guiding sleeve having an apex angle of between 15° and 45°, a secondary charge enclosed by said guiding sleeve having a frontal area at an end thereof, the generatrix of said guiding sleeve forming an angle of between 90° and 100° with the frontal area of said secondary charge, and at least three primer charges arranged on said frontal area at substantially equal distances apart on a pitch circle concentric to the axis of said secondary charge, the diameter of said pitch circle amounting to between 70 and 90 percent of the maximum exterior diameter of said guiding sleeve.

8 Claims, 5 Drawing Figures

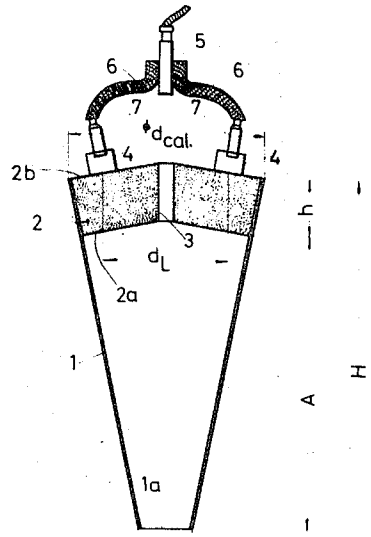

Fig.3

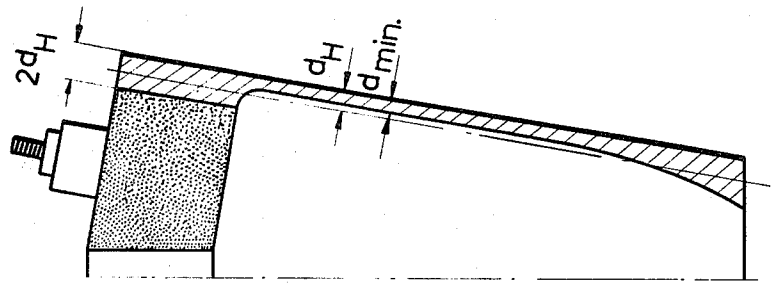

Fig.2

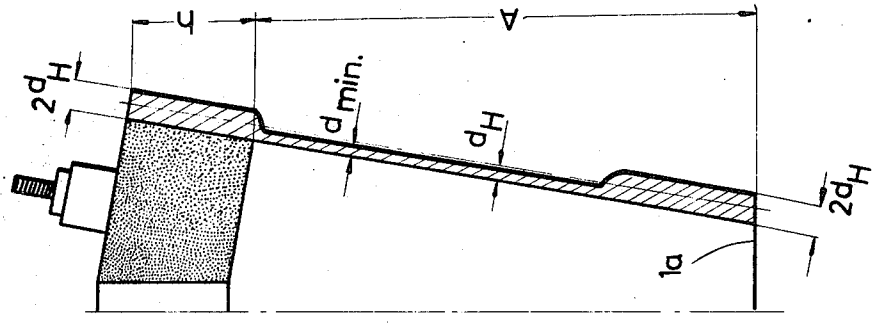

Fig.1

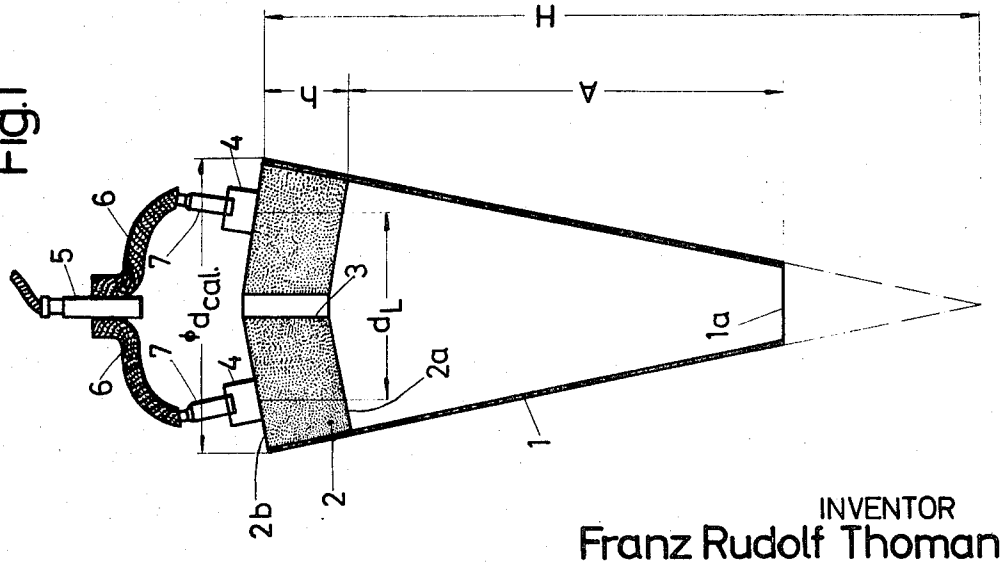

INVENTOR
Franz Rudolf Thomanek

By Mulgow and Torrey

ATTORNEYS

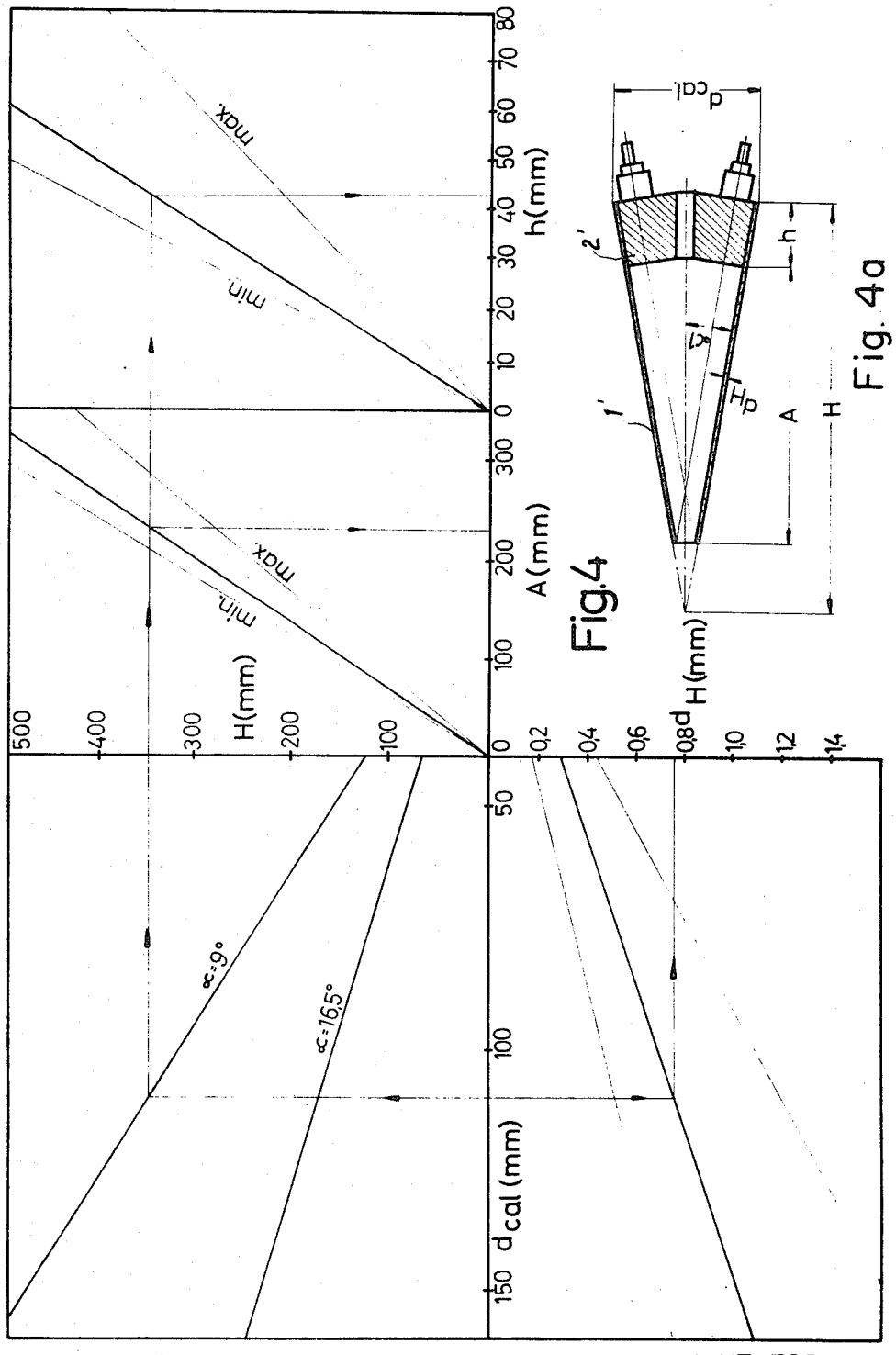

Fig.4

Fig.4a

INVENTOR

Franz Rudolf Thomanek

By Mulgleur and Torrey

ATTORNEYS

EXPLOSIVE BODY CONSTRUCTION

This invention relates to improvements on an explosive body construction with predetermined and increased effect comprising a guiding sleeve, which is open at its tapered side, is essentially cone-shaped, and has an apex angle of between 15° and 40°, and an explosive charge, which is arranged concentrically to said sleeve and whose frontal area in firing direction has a cavity according to the principle of the hollow charge, the generatrix of said cavity forming an angle of between 90° and 100° with the inner element of the guiding sleeve.

Explosive body constructions of the abovementioned type as they are already described, for instance, in the German Patent Specifications 974,557 and 1,130,344 allow to concentrate and to guide by means of the guiding sleeve the clouds of gas produced by the detonation in such a way that the effect of the charge can be increased within a narrow space.

It was a surprising observation that the effect of the known explosive charges with guiding sleeves could be further increased by initiating the charge on its greater frontal area at three or at more points by means of primer charges lying at equal distances to each other on a pitch circle concentric to the charge axis, the diameter of said circle amounting to between 70 and 90 percent of the caliber diameter of the secondary charge.

The inventive initiation at several points has the advantage of increasing the pressure due to the cumulation of the detonation waves originating from the initiating points.

The number of primer charges depends both on the caliber diameter of the charge and on the effect to be achieved. One can here proceed on the assumption that the detonation speed and thus the pressure of the gas clouds produced depends on the initiating power.

According to the invention the axes of the primer charges are directed to approximately the mouth center of the guiding sleeve in order to achieve a concentric deep hole. It is due to this arrangement that the gas clouds which flow off in the direction of the initiation cause a considerable deepening of the crater produced by the guiding sleeve with secondary charge, the greater depth being achieved when the strokes of the gas clouds are concentrated in mouth center of the guiding sleeve.

Another additional power increase of an explosive body according to the invention can be achieved by arranging the explosive charge at the inner wall of the guiding sleeve and by making its two frontal areas form essentially parallel lateral cone areas as well as by the wall thickness of the guiding sleeve amounting to about twice the value of d_H within the range of the height of the charge and within the range of one-third A measured from the opening of the guiding sleeve and being so reduced within the range of two-thirds A between the secondary charge and the thickening at the mouth that the guiding sleeve of varying wall thickness has the same weight as a guiding sleeve of constant wall thickness.

It the explosive body is to be used in connection with a hollow explosive charge which is attached before the charge in firing direction and which is lined with a metal layer, the invention provides, according to a further feature, that the charge designated as secondary charge in this combination has a through-hole in axial direction whose diameter amounts to between 10 and 20 percent of the caliber diameter of the charge.

It is the advantage of such a configuration that the leading thorn or spike formed by the metal liner can pass through the through-hole and can, for instance, pierce an armor plate lying in front of the guiding sleeve so that the gas clouds, which are formed upon ignition of the secondary charge arranged in the guiding sleeve and which flow at high speed under high tension, can penetrate through the hole pierced in the armor plate and can cause a detonationlike effect behind the armor plate. In the case of this configuration of an explosive body the sequence of ignition of the two charges is timed in such a way that the hollow explosive charge be ignited shortly before the secondary charge.

The various features of novelty which characterize the invention are pointed out with particularity in the claims annexed to and forming a part of this specification. For a better understanding of the invention, its operating advantages and specific objects attained by its use, reference should be had to the accompanying drawings and descriptive matter in which there are illustrated and described preferred embodiments of the invention.

In the drawings:

FIG. 1 is a longitudinal section through an explosive body consisting of guiding sleeve and secondary charge;

FIG. 2 and 3, in views similar to FIG. 1, show further embodiments of the guiding sleeve with respect to the progress of the wall thickness;

FIG. 4 shows a graph for dimensioning the guiding sleeve and the secondary charge; and

FIG. 4*a* is a view similar to FIG. 1 of the explosive body construction as described by the graph of FIG. 4.

For the sake of simplicity, similar elements of the various embodiments illustrated in the drawings have been indicated by the same reference numerals.

Referring now to the drawings, and particularly to FIG. 1, reference numeral 1 indicates a guiding sleeve and reference numeral 2 indicates a secondary charge according to the principle of the hollow charge, which, according to the invention, is arranged at the inner wall of the guiding sleeve and the frontal areas 2a and 2b of which form essentially parallel lateral cone areas forming an angle of between 90° and 100° with the generatrix of the guiding sleeve. The explosive body represented in FIG. 1 is designed for a combination with a generally known hollow explosive charge which is not shown here. Such a hollow explosive charge includes a forward cavity or recess and is attached before the secondary charge 2 in firing direction. With a view to ensuring that the thorn formed by the liner of the hollow charge can become effective and can, for instance, pierce a hole through an armor plate lying in front of the guiding sleeve before the secondary charge is ignited, the invention provides that charge 2 has a through-hole 3 in axial direction whose diameter amounts to between 10 and 20 percent of the caliber diameter d_{Kal}. The thorn penetrates through this through-hole when the hollow explosive charge is ignited shortly before the secondary charge.

In order to ensure that the detonation wave originating from the secondary charge exerts an optimum pressure, the invention provides, according to a further feature, that the charge is initiated on its greater frontal area 2*b* at three or more points by means of primer

charges or detonators 4, only two of which being shown in the described and illustrated embodiment of the invention, said primer charges or detonators lying at equal distances to each other on a pitch circle concentric to the charge axis whose diameter d_L amounts to between 70 and 90 percent of the caliber diameter of the secondary charge.

The primer charges 4 put onto secondary charge 2 and ignited on their part by a central blasting fuse 5 through detonating cord 6 and by one blasting fuse 7 each assigned to one primer charge each ensure that the secondary charge be initiated simultaneously at all ignition points.

Moreover, the axes of the primer charges 4, which are not illustrated in detail, are directed to the center of the mouth 1a of the guiding sleeve, in order that the crater torn open by charge 2 be as deep as possible when using the guiding sleeve without hollow explosive charge. When combining a guiding sleeve with a hollow explosive charge it is another advantage of this arrangement of the primer charges that the detonation clouds of the secondary charge enter the hole pierced by the advancing thorn of the liner of the hollow charge as a concentrated jet and thus have a greater detonating force after passing through the hole.

FIGS. 2 and 3 show further embodiment of guiding sleeve 1 differing with respect to the progress of their wall thicknesses. The known guiding sleeve essentially consists of two parallel lateral cone areas the generatrix of which includes an apex angle of between 15° and 40° at the mouth of the guiding sleeve.

It has been observed, however, that guiding sleeves of constant wall thicknesses are less effective than guiding sleeves of the same weight the wall thicknesses of which vary along their lengths and which are thickened in particular within the range of secondary charge 2 and at the mouth 1*a* of the guiding sleeve. The thickening can be at the outer lateral area of the guiding sleeve (each end portion being twice the thickness of the intermediate portion) as in the case of FIG. 2 or at the inner lateral area of the guiding sleeve as in FIG. 3, the thickening at the mouth 1a being achieved by a progressive increase of the wall thickness when the inner wall is straight-sided over about two-thirds of length A (measured from the secondary charge).

According to the invention the wall thickness has to be dimensioned in such a way that it amounts to about twice the value of d_H within the range of the height h of the secondary charge and within the range of one-third A measured from the mouth 1*a* and that it is so reduced within the range of two-thirds A between the secondary charge and the thickening at the mouth 1*a* as to give a guiding sleeve of varying wall thickness having the same weight as a guiding sleeve of constant wall thickness d_H.

FIG. 4 shows a dimensional graph in which the following design data of the guiding sleeve and of the secondary charge are fixed according to decisive points of view, i.e.:

1. the caliber diameter d_{Kal} of the secondary charge 2 measured at the point of the maximum charge inclusive the wall thickness on both sides of guiding sleeve 1;

2. the height H of the guiding sleeve measured from the diameter d_{Kal} to the intersection point of the generatrix of the guiding sleeve with the axis;

3. the height h of the secondary charge measured parallel to the axis;

4. the distance A between the secondary charge and the mouth 1*a* of the guiding sleeve;

5. the wall thickness d_H of the guiding sleeve.

It optimum effects shall be obtained, guiding sleeve 1′ with secondary charge 2′ as shown in FIG. 4*a* has to be dimensioned according to the dimensional graph of FIG. 4. The above-mentioned five characteristic values are entered in this graph. An optimum range with minimum and maximum limits as well as a preferred mean value are found in each quadrant. As the dimensions can be fixed from the most different points of view attention has to be paid only that the deviation from the optimum value occurs in the same sense, i.e. the dimensions of d_H, h, and A can be determined either on the minimum side or on the maximum side only. It is not possible, however, to choose one value on the minimum side and the other values on the maximum side. Deviations from the optimum values are suitable only when further boundary conditions, e. g. the total weight and a special location of the center of gravity, have to be observed for a design. The observation of the center of gravity is generally already facilitated by the possibility of thickening the guiding sleeve at the apex as in the embodiments according to FIGS. 2 and 3.

The dimensional graph shows that it is especially advantageous for all types of dimensioning when the height h of secondary charge 2 amounts to between 15 and 25 percent of the height H of the guiding sleeve and when the distance A of the charge from the mouth 1*a* of the guiding sleeve amounts to between 50 and 70 percent of the height of the guiding sleeve. Steel is indicated in the dimensional graph as the material of the guiding sleeve. In the case of other materials the wall thickness d_H has to be changed in proportion to the density of the material. If the wall thickness d_H were 1.3 mm for steel, a guiding sleeve of lead should have a wall thickness of 0.87 mm according to the previous statements.

What is claimed is:

1. An explosive body construction for use with a hollow explosive charge having a cavity in the front in respect to the firing direction, comprising a frustoconically-shaped guiding sleeve having a smaller dimensioned end with an opening in said sleeve being adapted to be arranged before the hollow explosive charge in respect to the firing direction, said guiding sleeve having an apex angle of between 15° and 45°, a secondary charge enclosed by said guiding sleeve having a frontal area at an end thereof, the generatrix of said guiding sleeve forming an angle of between 90° and 100° with the frontal area of said secondary charge, and at least three primer charges arranged on said frontal area at substantially equal distances apart on a pitch circle concentric to the axis of said secondary charge, the diameter of said pitch circle amounting to between 70 and 90 percent of the maximum exterior diameter of said guiding sleeve.

2. An explosive body construction according to claim 1, wherein the axes of said primer charges are directed to approximately the center of said guiding sleeve.

3. An explosive body construction according to claim 1, wherein said guiding sleeve includes a second frontal area at its opposite end forming a substantially parallel lateral cone with said frontal area, the wall thickness of said guiding sleeve being about double its intermediate

thickness at a location surrounding said secondary charge.

4. An explosive body construction according to claim 1, wherein said secondary charge has a through-hole in an axial direction whose diameter amounts to between 10 and 20 percent of the maximum diameter of said guiding sleeve.

5. An explosive body construction according to claim 1, wherein the height of said secondary charge amounts to between 15 and 25 percent of the height of the guiding sleeve.

6. An explosive body construction according to claim 1, wherein the distance of said secondary charge from the opening at the inner end of said guiding sleeve amounts to between 50 and 70 percent of the height of said guiding sleeve.

7. An explosive body construction according to claim 1, wherein the height of said secondary charge is about one-third the height of said guiding sleeve and the wall thickness of said guiding sleeve adjacent said second charge and the wall thickness adjacent the opposite end of said guiding sleeve for about one-third the height thereof is made double the thickness of the intermediate wall portion therebetween.

8. An explosive charge according to claim 7, wherein said guiding sleeve has two end wall portions and an intermediate wall portion therebetween which is of one-half the thickness of each end and of uniform thickness.

* * * * *