US 20070005105A1

(19) **United States**

(12) **Patent Application Publication** (10) **Pub. No.: US 2007/0005105 A1**

**Kusleika et al.** (43) **Pub. Date: Jan. 4, 2007**

(54) **TEMPORARY VASCULAR FILTER**

(75) Inventors: **Richard S. Kusleika**, Eden Prairie, MN (US); **Brian V. Finander**, Vadnais Heights, MN (US)

Correspondence Address:
**POPOVICH, WILES & O'CONNELL, PA**
**650 THIRD AVENUE SOUTH**
**SUITE 600**
**MINNEAPOLIS, MN 55402 (US)**

(73) Assignee: **ev3 Inc.**

(21) Appl. No.: **11/517,222**

(22) Filed: **Sep. 7, 2006**

**Related U.S. Application Data**

(63) Continuation of application No. 10/682,696, filed on Oct. 9, 2003, which is a continuation of application No. 09/824,910, filed on Apr. 3, 2001, now abandoned, which is a continuation of application No. 09/400,159, filed on Sep. 21, 1999, now Pat. No. 6,325,815.

**Publication Classification**

(51) **Int. Cl.**
*A61M 29/00* (2006.01)

(52) **U.S. Cl.** ..... **606/200**

(57) **ABSTRACT**

The present invention provides a method of deploying a medical filter within a channel in a patient's body and filter systems which can be used in such a method. Such a filter may include a radially expandable body **52** having an opening **56** in a proximal length thereof. In one method, the filter is urged along a length of the channel with the filter body in a radially reduced configuration. This body is expanded to substantially fill the lumen of the vessel and orient the opening in the body proximally. Body fluid is permitted to enter the filter body through the proximally oriented opening and pass distally through the distal length of the body so that the distal length of the body filters from the body fluid particulate material entrained therein. The proximal length of the body can be drawn into the retrieval catheter, thereby effectively closing the proximally oriented opening within the catheter to retain the particulate material within the enclosure. In a preferred embodiment, the filter body **52** is formed of a porous, resilient fabric having pores therein and the proximal opening **56** is at least five times the size of such pores.

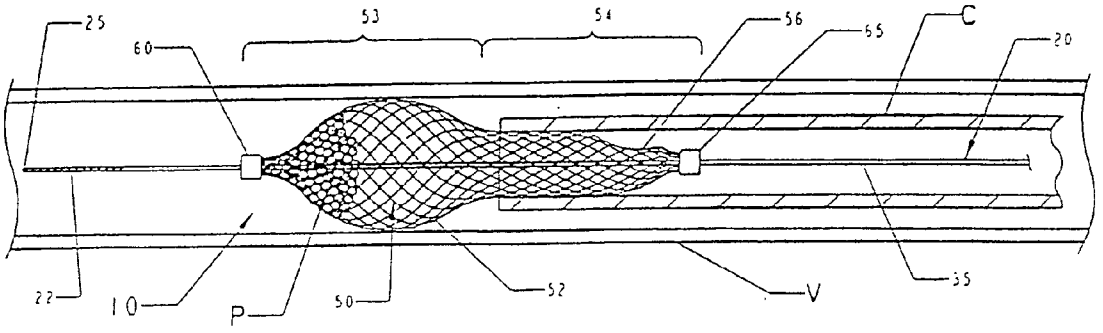

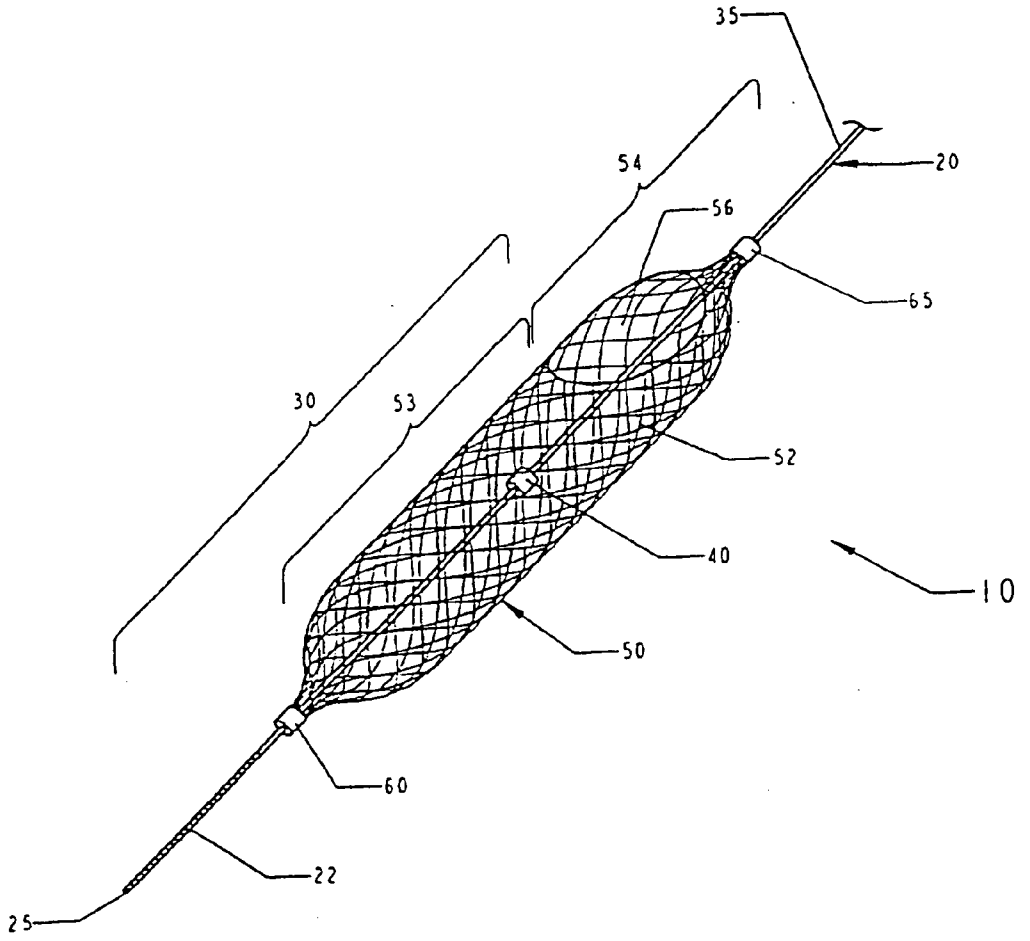


FIG 1

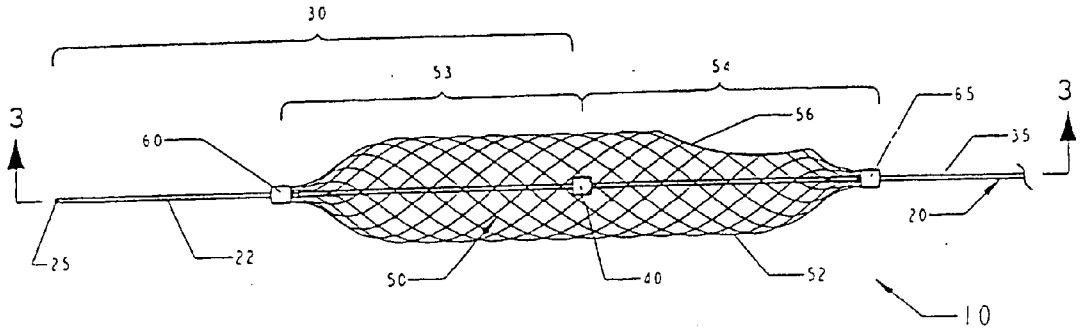
30
53
54
65
3
3
56
60
35
20
25
22
50
40
52
10

FIG 2

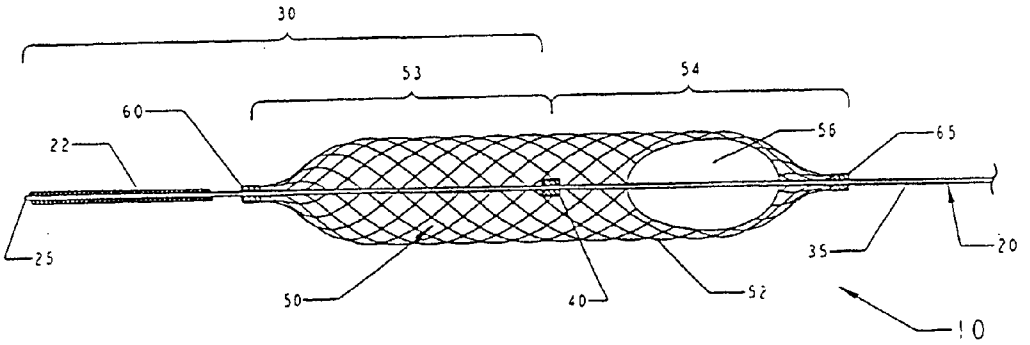
30
53
54
60
22
56
65
35
20
25
50
40
52
10

FIG 3

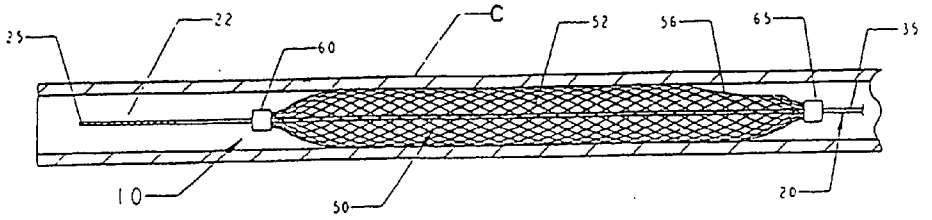


FIG 4

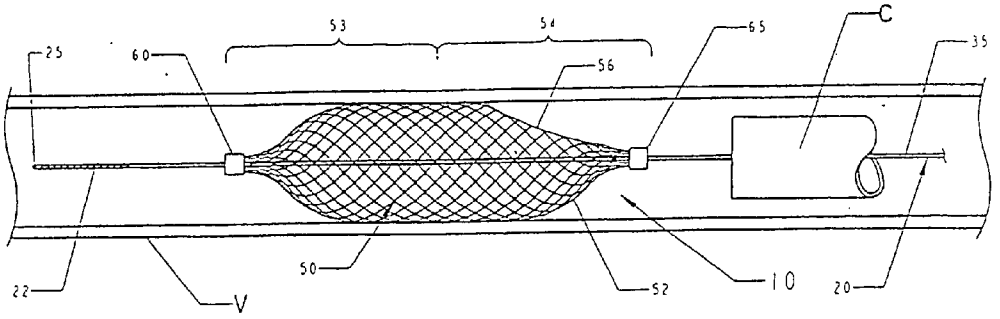


FIG 5

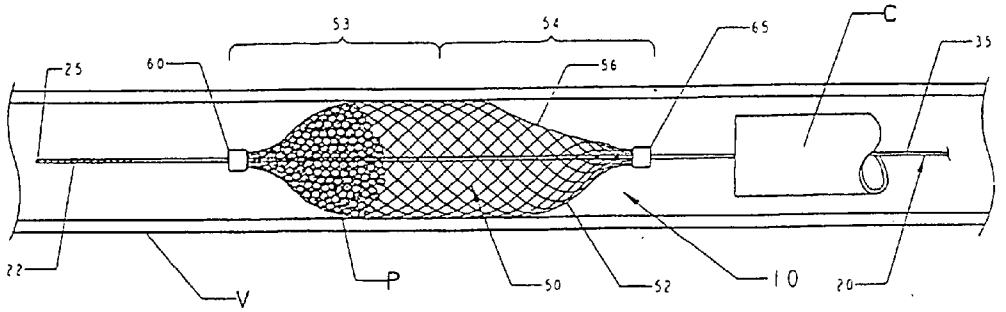


FIG 6

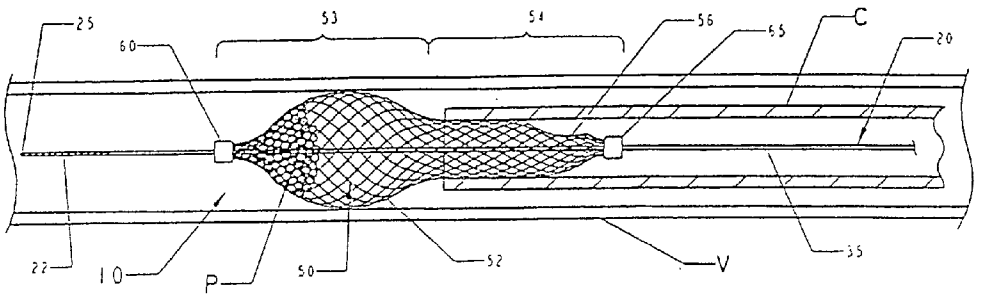
25
60
53
54
56
55
C
20
22
10
P
50
52
V
35

FIG 7

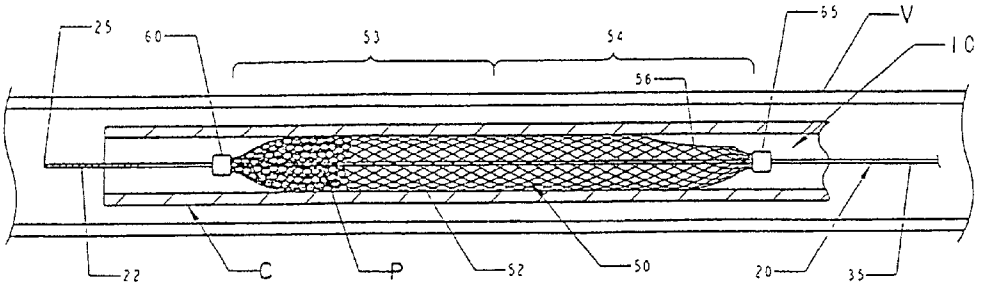
25
60
53
54
55
V
10
56
22
C
P
52
50
20
35

FIG 8

# TEMPORARY VASCULAR FILTER

## FIELD OF THE INVENTION

[0001] The present invention generally relates to filters for body passageways, and has particular utility in connection with temporary vascular filters.

## BACKGROUND OF THE INVENTION

[0002] Filters can be deployed in channels or vessels in patient's bodies in a variety of medical procedures or in treating certain conditions. For example, rotating burrs are used in removing atheroma from the lumen of patients' blood vessels. These burrs can effectively dislodge the atheroma, but the dislodged material will simply float downstream with the flow of blood through the vessel. Filters can be used to capture such dislodged material before it is allowed to drift too far downstream, possibly occluding blood flow through a more narrow vessel.

[0003] Some researchers have proposed various traps or filters for capturing the particulate matter released or created in such procedures. However, most such filters generally have not proven to be exceptionally effective in actual use. These filters tend to be cumbersome to use and accurate deployment is problematic because if they are not properly seated in the vessel they can drift to a more distal site where they are likely to do more harm than good. In addition, these filters are generally capable of only trapping relatively large thrombi and are not effective for removing smaller embolic particles from the blood stream.

[0004] The problems with most temporary filters, which are intended to be used only during a particular procedure then retracted with the thrombi trapped therein, are more pronounced. Even if the trap does effectively capture the dislodged material, it has proven to be relatively difficult or complex to retract the trap back into the catheter through which it was delivered without simply dumping the trapped thrombi back into the blood stream, defeating the purpose of the temporary filter device. For this reason, most atherectomy devices and the like tend to aspirate the patient's blood during the procedure to remove the dislodged material entrained therein.

[0005] One promising filter design which overcomes many of these difficulties is shown in International Publication No. WO 96/01591 (the publication of PCT International Application No. PCT/US95/08613), the teachings of which are incorporated herein by reference. Generally, this reference teaches a trap which can be used to filter particles from blood or other fluid moving through a body vessel. In one illustrated embodiment, this trap includes a basket 270 which can be deployed and retracted through a catheter or the like, making it particularly suitable for use in minimally invasive procedures such as angioplasty or atherectomy procedures. The fact that this trap is optimally carried on a mandrel 260 further enhances its utility as most common angioplasty balloons and atherectomy devices are used in conjunction with such mandrels. While this trap is very useful and shows great promise in many common procedures, it may be possible to better retain the thrombi collected in the filter during retrieval of the filter.

## SUMMARY OF THE INVENTION

[0006] The present invention provides a method of deploying a medical filter within a channel in a patient's body and devices which are well suited for use in such procedures. In accordance with one method of the invention, a filter and retrieval catheter are provided. This filter has a radially expandable body having proximal and distal ends and which defines an enclosure. The expandable body has a distal length and a proximal length which includes an opening therein. The retrieval catheter has a lumen with a diameter less than the maximum dimension of the body's expanded configuration. This filter is urged along a length of the channel in the patient's body with the filter body in a radially reduced configuration. The body is radially expanded to its expanded configuration such that it substantially fills the lumen of the vessel and the opening in the body is oriented proximally. Body fluid is permitted to enter the enclosure through this proximally oriented opening and is permitted to pass through the distal length of the body. In so doing, the distal length of the body filters from the body fluid particulate material entrained therein (assuming, of course, that there is any such particulate material of an appropriate size). The proximal length of the body is drawn within the lumen of the catheter, thereby effectively closing the proximally oriented opening within the retrieval sheath to retain said particulate material within the enclosure.

[0007] Further refinements of this method are envisioned. For example, in one embodiment, the filter has a narrow proximal end which is smaller than the lumen of the catheter. In drawing the proximal length of the filter within the catheter, this narrow proximal end may be introduced into the distal end of the catheter's lumen. The filter may then be retracted until the internal surface of the catheter engages the body of the filter distally of the opening to effectively create a particulate seal therebetween.

[0008] As noted above, the present invention also encompasses a device well suited for use in such procedures. In one embodiment, such a device comprises a collapsible filter system including a mandrel and a filter. The mandrel has proximal and distal ends and the filter is carried along the mandrel between these ends. The filter has a radially expandable body having proximal and distal ends of its own. The body is formed of a porous, resilient fabric having pores therein through which a body fluid may pass, but which are small enough to restrict passage of particulate material over a certain, predetermined size entrained in the body fluid. A proximally oriented hole passes through the fabric along a proximal length of the filter's body. This hole is spaced distally of the proximal end of the body and being at least about five times the size of said pores.

## BRIEF DESCRIPTION OF THE DRAWINGS

[0009] FIG. **1** is a perspective view of a medical filter in accordance with one embodiment of the present invention;

[0010] FIG. **2** is a side elevation view of the filter of FIG. **1**;

[0011] FIG. **3** is a cross sectional view of the medical filter of claim **1**, taken along line **3-3** of FIG. **2**;

[0012] FIG. **4** is a schematic side view in partial cross section illustrating a filter of an alternative embodiment of the invention in a radially reduced configuration within a catheter;

[0013] FIG. **5** is a schematic side view illustrating the filter of FIG. **4** deployed in a vessel in a patient's body;

[0014] FIG. **6** is a schematic side view of the filter of FIGS. **4** and **5** with collected particulate material trapped within the filter;

[0015] FIG. **7** is a schematic side view of the filter of FIGS. **4-6** drawn far enough into the catheter to effectively close the proximally oriented opening within the catheter; and

[0016] FIG. **8** is a schematic side view of the filter of FIGS. **4-7** withdrawn completely within the lumen of the catheter.

## DETAILED DESCRIPTION OF THE PREFERRED EMBODIMENTS

[0017] FIGS. **1-3** illustrate a filter system **10** in accordance with one embodiment of the invention. This filter system can be used in any channel in a patient's body, including blood vessels, the urinary tract or biliary tract and airways. This filter system **10** is optimally designed to be deployed in a patient's vessel in a minimally invasive procedure, such as by introducing the filter system into a blood vessel through a catheter (as described in greater detail below).

[0018] The filter system **10** of the invention generally includes a mandrel **20** and a filter **50**. Conceptually, the mandrel **20** can be thought of as having a primary function of positioning and controlling the deployment of the filter **50** while the filter can be considered the primary therapeutic or functional element of the system **10**.

[0019] The mandrel **20** should be fairly flexible to allow the device to be deployed in a curving body passageway without kinking or otherwise inhibiting suitable deployment of the filter **50**. While the mandrel can be formed of any material having any dimension suitable for the task for which the filter system **10** is to be employed, in most circumstances, the mandrel **20** will comprise an elongate metal wire. In one particularly preferred embodiment, the mandrel **20** is formed of nitinol, a roughly stoichiometric alloy of nickel and titanium having excellent "superelastic" properties. The use of nitinol in medical guidewires and related applications is well known in the art and need not be discussed in detail here. If so desired, the distal-most length of the mandrel may include a flexible helically wound coil **22** extending thereover. The use of such helical coils to enhance flexibility of the distal tip is well known in the guidewire art.

[0020] The mandrel **20** shown in FIGS. **1-3** has an enlarged diameter stop **40** attached thereto. The stop **40** is spaced proximally from the distal tip **25** of the mandrel **20**. Desirably, the stop **40** is spaced proximally of the proximal end of the helical coil **22** of the mandrel. This permits the distal slider **60** of the filter **50** to slide relatively freely and unencumbered along the length of the mandrel distally of the stop.

[0021] The stop **40** can be formed of any desired material and can be attached to the mandrel **20** in any desired fashion. The stop should be attached to the mandrel relatively securely, though, as the stop will be used to urge the filter **50** within the lumen of the vessel in which the system **10** is to be deployed. As an example, the stop **40** may comprise a standard radiopaque marker band which has been securely crimped on the mandrel **20** and/or attached to the mandrel using an adhesive or solder. The precise length and shape of the stop **40** is not critical. The drawings illustrate the stop **40** as a relatively short cylindrical body attached about the circumference of the mandrel. However, the stop **40** may have a more bulbous shape and could, in theory, even be formed integrally with the mandrel.

[0022] The stop **40** effectively divides the mandrel into distal and proximal lengths. The distal length **30** of the mandrel can be thought of as that length which extends distally from the stop **40** to the distal tip **25** of the mandrel. Likewise, the proximal portion **35** of the mandrel **20** can be thought of as comprising the length of the mandrel extending proximally from the stop **40** to the proximal end of the mandrel.

[0023] The filter **50** shown in FIGS. **1-3** has an elongate, generally tubular body **52** which extends from a distal slider **60** proximally to a proximal slider **65**. The body **52** of the filter can be formed of any material suitable for the application at hand. In many applications, e.g., filtering blood within a patient's vasculature, the filter body **52** typically comprises a length of a braided tubular fabric. The use of a tubular braid of nitinol to make medical devices is described in some detail in International Publication No. WO 96/01591, the teachings of which were incorporated above by reference. Briefly speaking though, this process can employ a tubular braid of a fabric comprising two sets of nitinol wires wrapped helically about a mandrel, with one set of wires being wrapped spirally about the mandrel in one direction and the other set being wrapped in the other direction. This braid is then placed in contact with a molding surface of a molding element which defines the shape of the desired functional element. By heat treating the fabric in contact with the molding surface of the molding element, one can create a functional element having virtually any desired shape.

[0024] The body **52** of the filter **50** desirably is made of a fairly flexible, resilient material. In particular, the filter **52** desirably has a radially expanded configuration, e.g., the shape shown in FIGS. **1-3**, which the device will tend to resiliently assume in the absence of any countervailing biasing force. A body **52** formed of a nitinol tubular braid which has been heat set into the desired shape should suit this purpose well.

[0025] In the filter system **10** shown in FIGS. **1-3**, the body **52** of the filter **50** assumes a generally tubular shape having tapered proximal and distal ends. The maximum outer diameter of the middle length of the body **52** should be sized to substantially fill the lumen of a vessel to ensure that the filter will effectively preclude any emboli (or other particulate material which may be entrained in the patient's bloodstream) from passing around the filter.

[0026] The body of the filter includes a distal length **53** and a proximal length **54**, each of which tapers from the middle of the body's length to their respective ends. In particular, the distal length **53** tapers distally toward a narrow distal end adjacent the distal slider **60** while the proximal length **54** of the filter body tapers toward its proximal end adjacent the proximal slider **65**. The rate of this tapering can be varied as desired. While FIGS. **1-3** illustrate a fairly gradual taper, the change in diameter may be more abrupt. The filter body **52** of FIGS. **1-3** is also fairly symmetrical, with the tapers of the proximal and distal lengths being about the same. In some circumstances it may

be advantageous to have the two lengths taper differently, e.g. where the proximal length tapers more gradually while the distal length changes diameter more abruptly.

[0027] The proximal length **54** of the filter body has at least one proximally oriented opening **56** therein. This opening passes through the flexible, resilient fabric of which the body **52** desirably is formed. The fabric has pores therein which allow fluids to pass therethrough, but the pores are small enough to prevent passage of particles larger than a predetermined size. If the body is formed of a metallic tubular braid as mentioned above, the maximum sizes of these pores can be controlled by adjusting the number of wires in the braid and the pick and pitch of the braid. For example, if the filter **50** is to be employed as a vascular filter, a pore size of 20-1500 microns is desirable. If such a filter body has a maximum diameter of about 4 mm, it may be formed of 48 wires each having a diameter of about 0.002 inches (about 50 microns) and a pick rate of about 90 per inch (about 35 per centimer).

[0028] The size of the proximally oriented opening **56** should be sufficient to permit body fluid with particulate material entrained therein to enter the enclosure within the body **52** of the filter. At a minimum, it is expected that the opening will be at leas five times the maximum pore size of the fabric of which the body is formed, with an opening of at least ten times the maximum pore size being preferred.

[0029] The opening **56** can be formed in any suitable fashion. If the filter is formed from a preformed flat sheet of fabric wrapped into the desired shape, the opening can be cut through the fabric before the fabric is shaped into the filter body. If the body **52** is formed of a tubular metallic braid, it may instead be cut through the fabric after the braid is heat set in the desired shape.

[0030] In one particularly preferred method of forming the filter (which method comprises another embodiment of the invention), a tubular metal braid is provided. The distal and proximal sliders **60**, **65** are attached to the braid a suitable distance from one another. The braid is trimmed at the distal end of the distal slider **60** and at the proximal end of the proximal slider **65**. A forming mandrel (not shown) is passed between the wire strands of the braid and positioned within the tubular braid.

[0031] The forming mandrel has an external molding surface which generally coincides with the desired shape of the filter body. The forming mandrel may have a larger diameter than the inner diameter of the tubular braid and the braid may be drawn down against the forming mandrel by applying axial tension to the braid. This structure may be heated at an elevated temperature to heat-set the filter body **52** in this shape and the forming mandrel may be removed.

[0032] The forming mandrel includes a proximal projection having a periphery the size and shape of the desired proximal opening **56**. This projection extends through the wire mesh of the tubular braid during heat treatment, forcing the wire strands to extend about the periphery of the projection. As a consequence of the heat treatment, when the forming mandrel is removed, the wires will retain the proximal opening without requiring cutting the fabric.

[0033] In FIGS. **1-3**, the filter **50** is shown as having a single opening **56** extending over only one side of the proximal length **54** of the filter body (i.e., above the mandrel **20** in FIG. **2**). To increase the percentage of body fluid which passes into the enclosure of the filter body, the number of openings or the shape of the opening(s) can be adjusted to maximize the cross sectional area of the vessel covered by the openings. For example, a plurality of openings can be spaced equiangularly about the proximal length **54**, such as three openings arranged about 120 degrees from one another.

[0034] The opening **56** in FIGS. **1-3** is generally elliptical with a major axis extending generally in a plane which contains the axis of the mandrel **20**. If one were to increase coverage of the opening **56** by adjusting its shape, the strength of the filter and its connection to the proximal slider **65** should not be compromised. One way to accomplish this is to offset the filter **50** with respect to the mandrel **20**. In FIGS. **1-3**, the body **52** of the filter is generally symmetrical about a central longitudinal axis and this axis generally coincides with the axis of the mandrel. One could instead make the filter asymmetrical, with the axis of the mandrel **20** spaced radially outwardly from the central axis of the body **52**. In such a design, the mandrel could extend adjacent to one side of the body and the opposite side of the body would extend farther from the mandrel. By positioning the opening **56** on the larger side of the body, the opening can be made larger and cover more of the cross sectional area of the vessel in which the filter is deployed.

[0035] While the opening **56** can extend up to or even into the proximal slider **65**, in a preferred embodiment the opening **56** is spaced distally from the slider **65** and the proximal end of the body **52**. This will enable a more secure connection between the slider **65** and the body. The distal end of the opening desirably terminates proximally of the location where the filter body has its maximum diameter. This will minimize the chance that body fluid could slip between the filter and the wall of the vessel in which the filter is deployed. This will also provide a more effective seal between the filter body **52** and the catheter in which it is retrieved. (Such retrieval is discussed below in connection with FIGS. **7** and **8**.)

[0036] The filter **50** is attached to or carried by the mandrel **20** by means of a proximal slider **65** attached to the body **52** adjacent its proximal end and a distal slider **60** attached adjacent the distal end of the body **52**. The distal slider **60** should be free to slide along at least a proximal portion of the distal length **30** of the mandrel while the proximal slider **65** should be free to slide along at least a distal portion of the proximal length **35** of the mandrel. In use, the stop **40** of the mandrel effectively defines a limit on the range of motion of these sliders **60**, **65**.

[0037] While each of the sliders **60**, **65** should be slidable along its respective length of the mandrel, the sliders can take any desired shape. In the illustrated embodiments, each slider comprises a relatively thin ring which is carried about the mandrel. The thin ring can be attached to the body **52** in any desired fashion, such as by crimping or swaging the fabric of the body between two layers of the ring or soldering, welding or otherwise adhering the fabric to the ring.

[0038] The stop **40** of the mandrel is positioned within the body **52** of the filter and is not exerting any biasing force on either of the sliders **60**, **65**. In this configuration, the mandrel **20** can be moved proximally and distally with respect to the

filter **50** without substantially affecting the shape or position of the filter. The limits of this range of free movement of the mandrel with respect to the filter are generally defined by the relationship between the stop **40** and the sliders **60**, **65**. In particular, the mandrel can be moved from a distal position wherein the stop **40** abuts but does not exert any force on the distal slider **60** and a proximal position wherein the stop **40** abuts, but does not exert any significant force on, the proximal slider **65**. This allows the filter **50** (or any other functional element which is carried by the mandrel) to be fairly precisely positioned within a patient's vessel and retain that position even if the guidewire is moved slightly during use. This can be advantageous in circumstances where other devices are exchanged over the guidewire (e.g., during angioplasty and atherectomy procedures).

[**0039**] The inner diameter of the generally annular collars defining the sliders **60**, **65** is desirably larger than the outer diameter of the mandrel, but should be smaller than the outer diameter of the stop **40**. In this fashion, the stop serves as an effective limit on proximal movement of the distal slider **60** and distal movement of the proximal slider **65**. Apart from this relationship with the slider **40** and the fact that both sliders are indirectly linked to one another by the body **52** of the filter, the proximal and distal sliders are slidable along the mandrel essentially independently of one another.

[**0040**] When the mandrel **20** is urged distally (to the left in FIGS. **2** and **3**) against the distal slider **60**, the stop will exert a distal biasing force against the distal end of the body **52** of the filter. In theory, if the filter were used in a frictionless environment, the filter would travel with the mandrel without any appreciable alteration in the shape of the body **52**. In most clinical applications, though, this is not the case. Instead, there is typically some force restraining completely free movement of the filter within the channel of the patient's body. Typically (and as suggested in FIGS. **5** and **6**, for example), the body **52** of the filter will resiliently expand into physical contact with the interior surface of the vessel within which it is deployed. This contact with the vessel wall will tend to hold the filter **50** in place as the stop of the mandrel slides proximally and distally between the two sliders **60**, **65**. When the mandrel is urged distally until it exerts a distal force against the distal slider **60**, this force will tend to axially elongate the body **52**.

[**0041**] Resilient tubular braids tend to assume a radially reduced profile upon axial elongation. (This property and some of its implications are discussed in International Publication No. WO 96/01591, mentioned previously.) As a consequence, when the mandrel **20** is urged distally to push distally against the distal slider **60**, this distal force acts against the restorative force of the resilient braid, which would otherwise bias the braid into its expanded configuration (FIGS. **1-3**). By overcoming this restorative force with a countervailing distal force, the body **52** will tend to both axially elongate and assume a radially reduced profile. This, in turn, reduces the force with which the body engages the wall of the vessel or catheter in which the filter is positioned and reduces friction between the filter **50** and the vessel or catheter. Hence, urging the mandrel distally to move the filter **50** distally will, at the same time, reduce friction between the filter and the vessel wall to further facilitate advancement of the filter along the vessel's lumen. This requires less force to push the filter distally, enabling the mandrel to be smaller and reducing the outer diameter of the collapsed device, making deployment in smaller vessels feasible. In addition, the reduced friction between the filter and the vessel wall limits damage to the intima of the vessel, permitting the filter to be deployed and moved with a minimum of trauma.

[**0042**] When the mandrel is retracted proximally, the stop **40** of the mandrel will abut against, and exert a proximal biasing force on, the proximal slider **65** of the filter **50**. This proximal biasing force will act against the restorative force of the body **52** to axially elongate and radially reduce that body. This permits the device to be withdrawn proximally along the lumen of the vessel either for repositioning at a more proximal location or for withdrawal from the patient's body at the end of the procedure.

[**0043**] In the embodiment of FIGS. **1-3**, the proximal and distal sliders **60**, **65** are free to move relatively independently of one another, limited primarily by their indirect link to one another through the body **52** of the filter. For example, when the mandrel **20** is urged distally against the distal slider **60** (FIG. **4**), the proximal slider will slide proximally along the proximal length **35** of the mandrel. Similarly, when the mandrel is withdrawn proximally to urge proximally against the proximal slider **65**, the distal slider will be free to drift distally along the distal length **30** of the mandrel. Ideally, there should be a sufficient distance between the distal shoulder of the stop **40** and the proximal end of the helical coil **22** at the distal end of the mandrel.

[**0044**] FIGS. **4-8** schematically depict one method of the invention utilizing an alternative filter design. Most of the elements of the filter **50'** in FIGS. **4-8** are essentially the same as like elements in FIGS. **1-3**, so the same reference numbers have been used for most elements in both sets of drawings. The primary differences between the filter **50'** of FIGS. **4-8** and the filter **50** described above is that the stop **40** has been omitted in FIGS. **4-8** and the proximal slider **65'** has been secured to the mandrel **20** at a fixed location. The distal slider **60** remains free to slide along the mandrel.

[**0045**] The body **52'** of the filter **50'** is shaped a little differently from the filter body **52** of FIGS. **1-3**. This difference is not crucial and does not yield significantly different properties. Instead, the differences in the fully deployed shapes of the two filters **50**, **50'** are intended to highlight that the shape can vary without compromising the filter's function.

[**0046**] FIG. **4** schematically illustrates the filter **50'** collapsed within the lumen of a catheter C. The body **52'** of the filter has been collapsed under the biasing force of the catheter walls into an axially elongated, radially reduced configuration. This catheter and filter combination may be advanced through a patient's body as a unit until a specific treatment site has been reached, but this combined unit may be dificult to steer through a more tortuous path. For many applications (e.g., deployment at a remote site within a patient's vasculature), the catheter will first be positioned adjacent the treatment site. Only then will the filter system be inroduced into the distal end of the catheter C and urged along the catheter's lumen and the vessel V until the distal end **25** of the mandrel and the distal slider **65** are positioned adjacent the distal end of the catheter, as shown in FIG. **4**.

[**0047**] Regardless of how the system reaches the state illustrated in FIG. **4**, once the catheter is in place the filter **50'**

can be deployed out the distal end of the catheter. In particular, the filter **50'** may be urged out of the distal end of the catheter, e.g., by holding the catheter C still and urging the mandrel **20** distally or by holding the mandrel **20** stationary and withdrawing the catheter C proximally.

[**0048**] Upon exiting the distal end of the catheter C, the flexible body **52** will resiliently expand radially outwardly, desirably until it engages the wall of the vessel V or, less desirably, is positioned adjacent to the vessel wall. (Such a configuration is shown in FIG. **5**.) This will help ensure that all fluid passing along the vessel V will have to pass through the filter body **52'**.

[**0049**] A substantial portion (ideally, all or at least a vast majority) of the body fluid in the vessel should pass through the proximally oriented opening **56** in the filter body. Since the opening is fairly large, it is anticipated that any particulate material entrained in the body fluid travelling through the vessel will enter the interior of the filter through the opening **56**. The pores in the distal length **53** of the filter body are significantly smaller, though, so most oversized particles will be trapped within the enclosure of the filter body. FIG. **6** schematically depicts such a situation, with a number of individual particles P being shown trapped within the filter body. If the filter **50** or **50'** is to be used in a vascular procedure, the pores should be large enough to permit red blood cells to pass therethrough, but small enough to trap thrombi or emboli above a certain predetermined size.

[**0050**] A wide variety of vascular filters are known in the art and the ease with which such filters can be deployed varies. One of the primary distinguishing characteristics between these various filter designs is the ease with which the filters can be withdrawn from or repositioned within the patient's body. For example, most commercially available vena cava filters are provided with sharp barbs or other structures which firmly seat the devices in a wall of the vessel, but which effectively preclude retraction of the device. Temporary filters avoid such tenacious attachments to the vessel wall, permitting them to be retracted or moved after initial deployment. As noted above, though, one of the primary difficulties encountered in using such temporary filters is the risk of dumping the captured particulate material back into the vessel from which it was filtered. Many designs require that the physician first aspirate the particulate material or, in the case of thrombi captured in vascular procedures, use drugs which help break down the particles to clinically acceptable sizes.

[**0051**] International Publication No. WO 96/01591, mentioned previously, provides a particularly useful filter. This filter, which may be generally dome-shaped and have a proximally-facing lip, enables a physician to close the filter prior to retraction, keeping the captured particles within the filter during removal or repositioning. Unfortunately, this design is mechanically complex. In one embodiment disclosed therein, the filter is provided with a drawstring which can be used to draw the proximal edge of the filter down toward the wire on which it is carried, minimizing the risk of losing the particles. A second design proposed in this reference employs a separately deployable cover which can be brought into sealing engagement with the filter. While this may further reduce the risk of dumping particles back into the vessel, the increased mechanical complexity makes it difficult to provide a highly reliable, cost-effective device.

[**0052**] The present invention provides an elegant solution to these difficulties which minimizes mechanical complexity and promises to provide very effective containment of filtered particles. FIG. **7** shows the filter **50'** of FIGS. **4-6** partially retracted into the catheter C. If the filter is being used for only a short period of time, the catheter C may be the same catheter used to initially deploy the filter in the vessel. If the filter is to be left in place for a longer period of time, though, it may be preferred to remove the deployment catheter (FIG. **4**) from the patient's body and later introduce a separate retrieval catheter by advancing the retrieval catheter along the mandrel **20**.

[**0053**] The lumen of the retrieval catheter C in FIG. **7** has a diameter smaller than the maximum cross-sectional dimension of the body's expanded configuration. The lumen is larger than the narrow proximal end of the filter body **52'** adjacent the proximal slider **65'**, though, and the illustrated filter body is spaced from the vessel wall about its entire periphery. As a consequence, the distal tip of the catheter can be positioned between the proximal end of the body **52'** and the wall of the vessel V before the catheter engages the body of the filter adjacent the slider. This can be done by holding the catheter in place and withdrawing the mandrel proximally, by holding the mandrel stationary and moving the catheter distally, or moving both the catheter and the mandrel.

[**0054**] Once the proximal end of the body **52'** is introduced into the catheter's lumen, the rest of the body can be drawn into the lumen of the catheter. Again, the body can be drawn into the catheter by advancing the catheter distally or retracing the filter proximally. At some point, the wall of the catheter C will engage the larger diameter body **52**. Ideally, the lumen of the catheter is notably smaller than the deployed diameter of the filter body. As shown in FIG. **7**, in this case the walls of the catheter will exert a biasing force to urge the body toward the radially reduced configuration in which it was initially deployed (FIG. **4**).

[**0055**] Perhaps more importantly, though, the internal surface of the catheter engages the body of the filter distally of the filter's proximally oriented opening **56**. While the opening may still be open to the lumen of the catheter, the engagement between the filer body and the catheter wall distally of the opening effectively creates a particulate seal therebetween. As a consequence, simply by advancing the catheter C with respect to the filter **50'**, one can seal within the combined catheter and filter all of the captured particles above the predetermined minimum size. This combination can then be moved as a unit either to remove it from or reposition it within the patient's body with minimal risk of losing any of the captured particles.

[**0056**] If the filter is to be completely withdrawn from the vessel, it is preferred that the filter body **52'** be completely withdrawn into the lumen of the catheter (as shown in FIG. **8**) rather than leaving a distal section of the filter extending out of the catheter (as shown in FIG. **7**). This will reduce friction against the vessel wall, making withdrawal easier and reducing trauma to the intima of the vessel.

[**0057**] While a preferred embodiment of the present invention has been described, it should be understood that various changes, adaptations and modifications may be made therein without departing from the spirit of the invention and the scope of the appended claims.

1. A method of deploying a medical filter within a channel in a patient, the method comprising:

a) providing a filter having a radially expandable body having proximal and distal ends, the proximal end connected to a proximal element and the distal end connected to a distal element, the proximal and distal elements being ring shaped and sized to receive an elongate member in a configuration such that the proximal and distal elements are spaced apart along a longitudinal length of the elongate member, the filter defining an enclosure, the body having a distal length and a proximal length, the body being formed of a porous, resilient fabric comprising strands spaced apart to define pores extending through the fabric through which a body fluid may pass, but which restrict passage therethrough of particulate material entrained in the fluid, the body having at least one proximally oriented opening formed between strands of the fabric, the strands having been spaced apart such that the at least one opening is at least ten times the size of the pores, the at least one opening passing through the fabric along the proximal length of the body, and a retrieval catheter having a lumen with a diameter less than a maximum dimension of the body's expanded configuration;

b) urging the filter along a length of the channel with the filter body in a radially reduced configuration;

c) radially expanding the body to its expanded configuration such that it substantially fills the lumen of the channel and the opening in the body is oriented proximally;

d) permitting fluid to enter the enclosure through the proximally oriented opening and pass distally through the distal length of the body, the distal length of the body filtering from the fluid particulate material entrained therein; and

e) drawing the proximal length of the body within the lumen of the retrieval catheter, thereby effectively closing the proximally oriented opening within the catheter to retain the particulate material within the enclosure.

2. The method of claim 1 wherein the proximal length of the filter's body tapers proximally to a narrow proximal end which is smaller than the lumen of the catheter, the step of drawing the proximal length within the catheter comprising receiving the narrow proximal end of the body in the lumen of the catheter then retracting the filter until the internal surface of the catheter engages the body of the filter distally of the opening to effectively create a particulate seal therebetween.

3. The method of claim 2 wherein the narrow proximal end of the body is spaced from a wall of the channel when the filter is expanded into its expanded configuration.

4. The method of claim 3 wherein a wall of the catheter is positioned between the narrow proximal end of the body and the wall of the channel as the proximal length of the body is drawn into the lumen of the catheter.

5. The method of claim 1 wherein a wall of the catheter urges the filter's body radially inwardly toward the radially reduced configuration as the body is drawn into the lumen thereof.

6. The method of claim 1 wherein the filter is urged along the channel in the radially reduced configuration within a deployment catheter.

7. The method of claim 6 wherein the same catheter is used as both the deployment catheter and the retrieval catheter.

8. The method of claim 6 wherein the deployment catheter's wall constrains the filter body in the radially reduced configuration when the body is received in the lumen thereof, the body being radially expanded by deploying the filter out of the distal end of the catheter, whereupon the body resiliently expands radially outwardly upon removal of the constraint.

9. The method of claim 1 wherein the retrieval catheter is held substantially stationary as the proximal length of the filter's body is drawn therewithin.

10. The method of claim 1 wherein the proximal length of the filter's body is drawn into the catheter's lumen by holding the body substantially stationary and advancing the catheter distally over the proximal length thereof.

11. The method of claim 1 wherein the filter is carried by a mandrel, the catheter being advanced along the mandrel prior to drawing the body of the filter into the lumen thereof.

12. The method of claim 1 wherein the elongate member is a guidewire.

13. A method of making a medical filter body comprising:

providing a tubular metal braid having distal and proximal ends, the braid being formed from wire strands;

passing a forming mandrel between wire strands of the braid between the distal and proximal ends of the tubular braid to force the wire strands apart such that they extend about a periphery of the forming mandrel;

heating the tubular metal braid to a temperature sufficient to heat set the wire strands extended about the periphery of the forming mandrel such that an opening in the shape of the periphery of the forming mandrel is formed in the metal braid; and

removing the forming mandrel from the tubular braid.

14. The method of claim 13 wherein the distal and proximal ends of the tubular metal braid are tapered.

15. The method of claim 13 wherein the forming mandrel has an external molding surface and wherein the method further comprises applying axial tension to the braid to draw the braid down against the molding surface of the forming mandrel.

16. The method of claim 13 wherein the forming mandrel has an external molding surface with a diameter greater than a diameter of the tubular braid and wherein the method further comprises applying axial tension to the braid to draw the braid down against the molding surface of the forming mandrel.

17. The method of claim 13 wherein the forming mandrel has an external molding surface having a diameter greater than a diameter of the tubular braid and wherein during the step of passing the forming mandrel between wire strands of the braid the diameter of the braid increases.

18. The method of claim 17 further comprising:

applying axial tension to the braid to draw the braid down against the external molding surface of the forming mandrel.

**19**. A method of making a medical filter comprising:

providing a tubular metal braid formed of wire strands;

attaching distal and proximal elements to the braid spaced from one another to form a filter body between the proximal and distal elements, the filter body having a proximal portion extending between the proximal element and a midpoint of the filter body;

passing a forming mandrel between wire strands of the proximal portion of the braid to force the wire strands to extend about a periphery of the forming mandrel;

heating the tubular metal braid to a temperature sufficient to heat set the wire strands extended about the periphery of the forming mandrel to form a proximal opening in the filter body; and

removing the forming mandrel.

**20**. The method of claim 19 wherein the forming mandrel has an external molding surface and wherein the method further comprises applying axial tension to the braid to draw the braid down against the external molding surface of the forming mandrel.

**21**. The method of claim 19 wherein the forming mandrel has an external molding surface with a diameter greater than a diameter of the tubular braid and wherein the method further comprises applying axial tension to the braid to draw the braid down against the external molding surface of the forming mandrel.

**22**. The method of claim 19 wherein the forming mandrel has an external molding surface having a diameter greater than a diameter of the tubular braid and wherein during the step of passing the forming mandrel between wire strands of the braid the diameter of the braid increases.

**23**. The method of claim 19 further comprising:

applying axial tension to the braid to draw the braid down against the forming mandrel.

**24**. The method of claim 19 further comprising:

trimming the braid at a distal end of the distal element and at a proximal end of the proximal element.

**25**. The method of claim 19 wherein the forming mandrel has an external molding surface with a periphery that generally coincides with a desired shape of the opening in the filter body.

**26**. A method of making an opening in the tubular body of a medical filter formed from braided wire strands, the tubular body having distal and proximal ends, the method comprising:

passing a forming mandrel between wire strands of the braid between the distal and proximal ends of the tubular body to force the wire strands apart such that they extend about a periphery of the forming mandrel;

heating the tubular body to a temperature sufficient to heat set the wire strands extended about the periphery of the forming mandrel such that an opening in the shape of the periphery of the forming mandrel is formed in the tubular body of the medical filter; and

removing the forming mandrel from the tubular body.

**27**. Apparatus for filtering emboli from blood flowing through a vessel, the apparatus comprising:

a guide wire having a distal region and a stop on the distal region;

a capture ring disposed for translation on the guide wire, the stop limiting translation of the capture ring in a distal direction; and

a filter sac connected to the capture ring.

**28**. The apparatus of claim 27 wherein, when the filter sac is deployed in the vessel, rotation or distal translation of the guide wire relative to the capture ring does not displace the filter sac, but retraction of the guide wire in a proximal direction causes the stop to abut against the capture ring.

**29**. Apparatus for filtering emboli from blood flowing through a vessel, the apparatus comprising:

a guide wire having a first portion having a first diameter and a distal region having a second diameter greater than the first diameter; and

a filter element having a capture ring disposed for translation on the first portion, the capture ring having an aperture greater than the first diameter but smaller than the second diameter,

wherein rotation or distal translation of the guide wire relative to the capture ring does not displace the filter element.

**30**. The apparatus of claim 29 wherein the filter element comprises an expandable sac.

**31**. The apparatus of claim 29 wherein the guide wire further comprises a flange disposed on the distal region having a diameter larger than the diameter of the aperture in the capture ring.

**32**. The apparatus of claim 29 wherein the filter element has a contracted state suitable for transluminal delivery, and the distal region has a length that is greater than a length of the filter element in the contracted state.

**33**. Apparatus for filtering emboli during treatment of occlusive disease in a vessel, the apparatus comprising:

a guide wire having a first diameter and a distal region having a second diameter greater than the first diameter;

a filter element having a sac coupled to a capture ring, the capture ring having an aperture greater than the first diameter but smaller than the second diameter,

wherein the filter element is disposed on the guide wire and the guide wire extends through the aperture with the distal region disposed distally of the capture ring, so that when the filter element is deployed in the vessel, rotation or distal translation of the guide wire does not displace the filter element, but retraction of the guide wire in a proximal direction causes the distal region to abut against the capture ring.

**34**. A method of filtering emboli from blood flowing through a vessel, the method comprising:

providing a guide wire having a distal region including a stop, and a filter element having a capture ring disposed for translation on the guide wire proximal of the stop;

transluminally inserting the guide wire and filter element into a vessel;

deploying the filter element to engage a wall of the vessel, the filter element filtering emboli out of blood flowing through the vessel; and

advancing a treatment device along the guide wire to treat a portion of the vessel proximal to the location of the

filter element, rotation or distal translation of the guide wire relative to the filter element imparted by the treatment device not displacing the filter element.

**35**. The method of claim 34 further comprising a step of, after use of the treatment device is completed, pulling the guide wire proximally so that the stop engages the capture ring and causes the filter element to return to the contracted state.

**36**. The method of claim 34 further comprising:

providing a delivery sheath; and

compressing the filter element to a contracted state to insert the filter element within the delivery sheath.

**37**. The method of claim 34 wherein the filter element comprises an expandable sac, and deploying the filter element comprises expanding the expandable sac so that a perimeter of the expandable sac contacts the wall of the vessel.

**38**. The method of claim 37 wherein the filter element further comprises a cylindrical sleeve and deploying the filter element further comprises expanding the cylindrical sleeve against the wall of the vessel.

**39**. The method of claim 34 further comprising providing a catheter having a lumen, and pulling the guide wire proximally causes the filter element to become retracted within the lumen.

**40**. Apparatus for filtering emboli from blood flowing through a vessel, the apparatus comprising:

a mandrel having a distal end and a stop spaced proximally of the distal end;

a slider disposed for translation on the mandrel, the stop limiting translation of the slider in a distal direction; and

a vascular filter connected to the slider.

**41**. The apparatus of claim 40 wherein, when the vascular filter is deployed in the vessel, rotation or distal translation of the mandrel relative to the slider does not displace the vascular filter, but retraction of the mandrel in a proximal direction causes the stop to abut against the slider.

**42**. Apparatus for filtering emboli from blood flowing through a vessel, the apparatus comprising:

a mandrel having a distal end and a proximal length having a first diameter and a stop spaced proximally of the distal end having a second diameter greater than the first diameter; and

a filter element having a slider disposed for translation on the proximal length, the slider having an aperture greater than the first diameter but smaller than the second diameter,

wherein rotation or distal translation of the mandrel relative to the slider does not displace the filter element.

**43**. The apparatus of claim 42 wherein the filter element comprises an expandable vascular filter.

**44**. Apparatus for filtering emboli during treatment of occlusive disease in a vessel, the apparatus comprising:

a mandrel having a distal end and a proximal length having a first diameter and a stop spaced proximally of the distal end, the stop having a second diameter greater than the first diameter;

a filter element having a vascular filter coupled to a slider, the slider having an aperture greater than the first diameter but smaller than the second diameter,

wherein the filter element is disposed on the mandrel and the mandrel extends through the aperture with the stop disposed distally of the slider, so that when the filter element is deployed in the vessel, rotation or distal translation of the mandrel does not displace the filter element, but retraction of the mandrel in a proximal direction causes the stop to abut against the slider.

**45**. A method of filtering emboli from blood flowing through a vessel, the method comprising:

providing a mandrel having a distal region including a stop, and a filter element having a slider disposed for translation on the mandrel proximal of the stop;

transluminally inserting the mandrel and filter element into a vessel;

deploying the filter element to engage a wall of the vessel, the filter element filtering emboli out of blood flowing through the vessel; and

advancing a treatment device along the mandrel to treat a portion of the vessel proximal to the location of the filter element, rotation or distal translation of the mandrel relative to the filter element imparted by the treatment device not displacing the filter element.

**46**. The method of claim 45 further comprising a step of, after use of the treatment device is completed, pulling the mandrel proximally so that the stop engages the slider and causes the filter element to return to the contracted state.

**47**. The method of claim 45 further comprising:

providing a catheter having a lumen; and

compressing the filter element to a contracted state to insert the filter element within the lumen of the catheter.

**48**. The method of claim 45 wherein the filter element comprises an expandable vascular filter, and deploying the filter element comprises expanding the expandable vascular filter so that a perimeter of the expandable vascular filter contacts the wall of the vessel.

**49**. The method of claim 45 further comprising providing a catheter having a lumen, and pulling the mandrel proximally causes the filter element to become retracted within the lumen.

* * * * *