June 27, 1933. F. L. MORSE 1,915,377

STARTING DEVICE FOR PRIME MOVERS

Filed May 25, 1929

Fig:1.

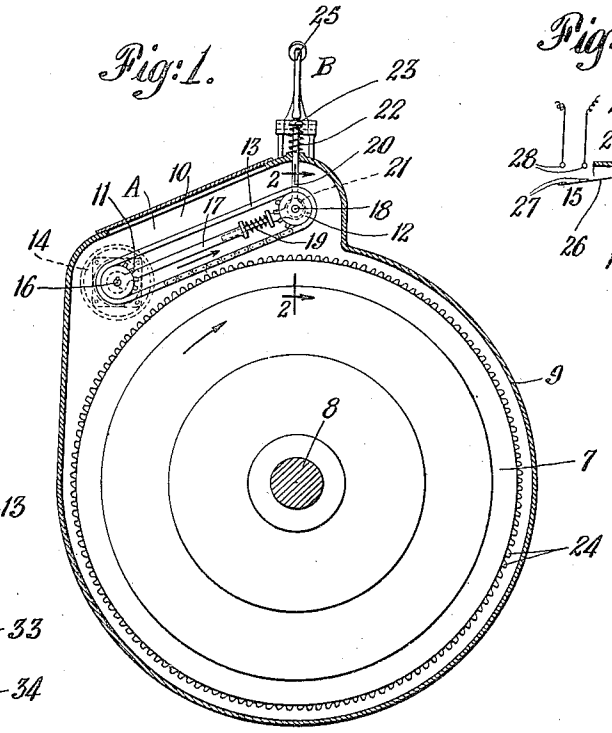


Fig:6.

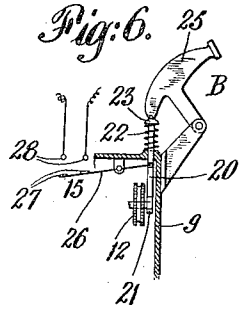


Fig:3.

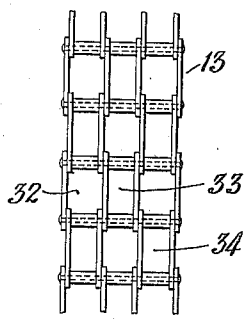


Fig:4.

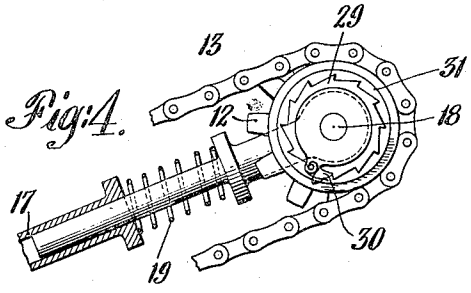


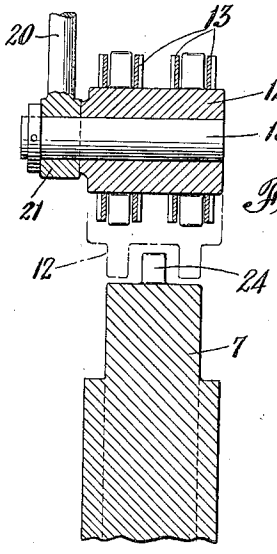


Fig:2.

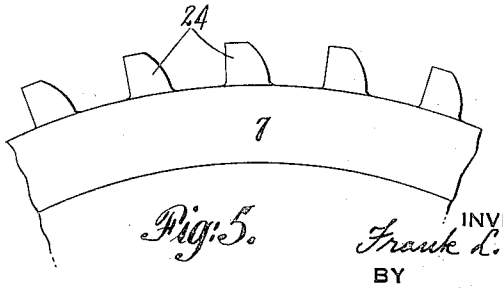


Fig:5.

INVENTOR
Frank L. Morse
BY
Symmestvedt & Lechner
ATTORNEYS

Patented June 27, 1933 1,915,377

# UNITED STATES PATENT OFFICE

FRANK L. MORSE, OF ITHACA, NEW YORK

## STARTING DEVICE FOR PRIME MOVERS

Application filed May 25, 1929. Serial No. 365,840.

This invention relates to starting devices for prime movers and is particularly useful as a starting device for automobiles in which connection it will be described.

One of the primary objects of my invention is the provision of a quiet, simple and durable device for applying power to turn a toothed wheel of a prime mover, such, for example, as an automobile engine, and which has capacity to be engaged with and disengaged from the toothed wheel.

In starting devices for automobiles it is customary to employ a small pinion which is thrust into and out of mesh with teeth on the fly-wheel of the engine, thus giving a large gear reduction and enabling the employment of a small starter motor. Such gears, however, are liable to jam and are always noisy.

In the present invention a chain starting device is employed, the chain of which is relatively short and does not wrap around the wheel to be driven. The device is adapted to be brought into and out of engagement with the driven wheel and employs small sprocket wheels or pinions enabling the use of a small motor.

I propose to arrange the teeth of the sprocket wheels of the chain device and driven wheel in different transverse planes and to employ a multi-strand chain, thereby providing an arrangement in which jamming or clashing of the teeth of the chain device with those of the driven wheel cannot occur.

Another object of my invention is to provide means whereby proper mesh of the chain with the teeth of the driven wheel is ensured.

Still another object is the provision of special teeth on the driven wheel adapted to aid in causing disengagement of the starter device from the driven wheel when the engine starts.

How the foregoing, together with such other objects and advantages as may hereinafter appear, or are incident to my invention, are realized, is illustrated in preferred form in the accompanying drawing, wherein—

Fig. 1 is a sectional elevational view illustrating my invention as applied to the fly-wheel of an automobile engine.

Fig. 2 is a fragmentary enlarged cross section taken substantially on the line 2—2 of Fig. 1.

Fig. 3 shows a fragment of a multi-strand chain which I prefer to employ.

Fig. 4 is a fragmentary view illustrating a ratchet device employed in the device.

Fig. 5 illustrates a special form of teeth for the fly-wheel which may be employed, and

Fig. 6 is a fragmentary, more or less diagrammatic view illustrating one form of operating or control mechanism for the device.

Referring now more particularly to Figs. 1 and 6, I have shown an arrangement of my invention suitable for use in automobiles in which the fly-wheel of the engine is designated by the reference numeral 7, the engine shaft by the numeral 8, and the engine casing by the numeral 9. The upper portion of the casing 9 is formed to house, at 10, my improved engine starting device A.

The device A comprises, in general, a pair of small diametered sprocket wheels 11 and 12; a chain 13 preferably of the type shown in Fig. 3; a motor 14 which may be of any suitable type, for example, an electric starter motor such as now commonly used in automobiles; and operating mechanism for the device indicated as a whole by the reference letter B.

The motor 14 may be secured to the crank case in any suitable manner and its operation is controlled by means of a switch diagrammatically illustrated at 15 in Fig. 6 and operated in a manner hereinafter appearing.

The motor shaft 16 has the sprocket wheel or pinion 11 keyed thereon and when the motor is started, the endless chain 13 which passes around the sprocket wheels 11 and 12 is driven.

An arm 17 extends from the motor shaft 16 to the shaft 18 of the sprocket wheel 12. This arm is preferably made in two parts with a spring 19 therebetween exerting pressure in a direction to lengthen the arm. The arm at one end is adapted to pivot on the mo-

tor shaft 16 and as the other end carries the sprocket wheel 12, it will be seen that slack tending to develop in the chain is taken out under the lengthening action of the spring 19.

The sprocket wheel 12 of the chain device is normally held in the position shown in Fig. 1 by means of a rod 20 having an ear 21 at its lower end for receiving the shaft 18 and having a spring 22 associated therewith, which spring at its lower end engages the casing 9 and at its upper end engages a head 23 on the rod, thus yieldingly holding the chain device in the position shown. In this position the chain 13 is disengaged from the sprocket teeth 24 provided on the fly wheel 7 of the engine.

When it is desired to start the engine the chain of the chain device A is brought into engagement with sprocket teeth on the fly wheel by depressing a pivoted lever 25 which in turn depresses the rod 20. As this rod moves down the sprocket wheel 12 carried thereby also moves down, bringing the chain into engagement with the fly wheel teeth, it being noted that the chain device pivots, so to speak, around the motor shaft 16 or its bearing when such operation takes place.

I prefer to associate the starter motor control switch 15 with the mechanism just described in a manner that the motor will be started in operation after the engagement takes place. A diagrammatic arrangement of this is shown in Fig. 6 in which a pivoted arm 26 carrying switch contacts 27 is connected at one end to the operating rod 20. It will be seen that when the rod is depressed the contacts 27 will close the motor circuit 28 and start the motor in operation.

As soon as the engine starts under its own power, pressure on the lever may be released whereupon the chain device disengages from the fly wheel teeth due to the action of the spring 22. In this connection it is pointed out that as soon as the engine starts under its own power, there is a tendency for the fly-wheel to throw the chain device out of action, thus augmenting the action of the spring 22. To further augment the spring in its disengaging action the sprocket teeth may be made of the form illustrated in Fig. 5.

Referring to Fig. 4 it will be seen that I have associated a ratchet wheel 29 with the sprocket wheel 12 and that a spring pressed pawl 30 carried by the arm 17 engages the ratchet wheel. This device operates to cause the chain to move in a direction around the sprockets upon successive actuations of the operating device B, as will be clear from the following. Owing to the fact that the chain device pivots about the sprocket 11, the chain, without provision to the contrary, would move in one direction around the sprocket 12 when the lever 25 is depressed and back in the other direction when the lever is released. By providing the ratchet and pawl, movement of the chain is limited to movement in one direction. The advantage to be derived from the arrangement is that in the event that the chain will not properly mesh with the sprocket teeth of the fly-wheel at first actuation of the lever 25, proper mesh can be effected by two or more actuations of the lever because such successive application causes the chain to move to a position where proper mesh will take place. A friction disc 31 is provided between the ratchet wheel 29 and the sprocket wheel 12 which will permit backward rotation of the sprocket wheel with respect to the ratchet wheel in the event that the engine should back-fire, thus preventing damage to the device.

Referring to Figs. 2 and 3, it will be seen that the teeth 24 of the fly-wheel 7 are located in a different transverse plane than the plane of the teeth of the sprocket wheel 12. In this instance the fly-wheel is provided with one set of teeth and the sprocket wheel 12 with two sets of the teeth, the fly-wheel teeth being located in a plane between the planes of the two sets of teeth of the sprocket wheel. The multi-strand chain 13 is composed of three strands 32, 33 and 34, the outer strands 32 and 34 of which engage the two sets of teeth of the sprocket wheel 12 and the intermediate strand 33 of which engages the teeth of the fly-wheel. By such an arrangement the teeth of the sprocket wheel cannot clash with the teeth of the fly-wheel even though the sprocket wheel be depressed to a position bringing it closely adjacent the periphery of the fly-wheel. Stated in another way, the teeth of the sprocket wheel would straddle the teeth of the flywheel in the event that the sprocket wheel were moved to the position indicated in dot and dash lines in Fig. 2.

What I claim as my invention and desire to secure by Letters Patent is:—

1. Engine starting mechanism comprising a motor driven chain device including a pair of sprocket wheels, an endless chain passing over said sprocket wheels, means for supporting the chain device peripherally of a driven wheel of the engine, said driven wheel having sprocket teeth, means for moving the chain of the chain device into and out of driving engagement with the toothed driven wheel of the engine and means for moving the chain in one direction around its sprocket wheels on successive actuations of the last mentioned means.

2. An engine starter comprising a starting motor, a sprocket driven by said motor, a second sprocket, an endless-chain passing over said sprockets, a sprocket wheel associated with the engine and adapted to be driven thereby, said second sprocket being mounted to move in a direction to cause the chain

to engage the engine sprocket wheel, means for moving said second sprocket wheel in such direction and means associated with said second sprocket wheel for moving the chain in one direction around its sprocket wheels on actuation of the means for moving said second sprocket wheel.

3. Engine starting mechanism comprising a motor driven chain device adapted to be brought into driving engagement with a wheel of the engine having sprocket teeth engageable by the chain, control means for the motor, manually operated means for causing the aforementioned engagement of the chain device and the driven wheel of the engine, and means for automatically moving the chain to a position of effective mesh with the engine wheel on successive actuations of said manually operated means.

4. In combination, a sprocket wheel to be driven, and a driving unit for driving said wheel comprising a pair of sprocket wheels, an endless chain passing over said wheels, a motor for driving one of the sprockets, a movable support for the other sprocket, means associated with said support for yieldingly holding said other sprocket in a position in which said chain will be out of engagement of the sprocket wheel to be driven, means for moving said movable sprocket wheel to a position in which said chain will engage the sprocket wheel to be driven, and means associated with said movable support and movable sprocket wheel for causing movement of the chain in a direction around the sprocket wheel upon successive operation of the last mentioned means.

5. In combination, a sprocket wheel to be driven, and a driving unit for driving said wheel comprising a pair of sprocket wheels, an endless chain passing over said wheels, a motor for driving one of the sprockets, a movable support for the other sprocket, means associated with said support for yieldingly holding said other sprocket in a position in which said chain will be out of engagement of the sprocket wheel to be driven, means for moving said movable sprocket wheel to a position in which said chain will engage the sprocket wheel to be driven, ratchet teeth associated with the movable sprocket, and pawl means engaging said ratchet teeth.

6. In combination, a sprocket wheel to be driven, and a driving unit for driving said wheel comprising a pair of sprocket wheels, an endless chain passing over said wheels, a motor for driving one of the sprockets, a movable support for the other sprocket, means associated with said support for yieldingly holding said other sprocket in a position in which said chain will be out of engagement of the sprocket wheel to be driven, means for moving said movable sprocket wheel to a position in which said chain will engage the sprocket wheel to be driven, a ratchet wheel associated with the movable wheel and having frictional engagement therewith, and a pawl engaging said sprocket wheel.

7. Engine starting mechanism comprising a motor driven chain device including an endless drive chain and sprocket wheels over which the chain runs, said chain device being mounted to have capacity to be brought into and out of engagement with a sprocket toothed driven wheel of the engine, means for moving said chain device into engagement with said driven wheel, and means for moving the chain device out of engagement with said driven wheel on release of the last mentioned means, the forward faces of said sprocket teeth of the driven wheel in the direction of rotation of the wheel being inclined rearwardly from bottom to top in an amount more than normal tooth inclination so as to augment disengagement movement of the chain device.

In testimony whereof I have hereunto signed my name.

FRANK L. MORSE.