March 25, 1941. V. HALL 2,236,030

COLLAPSIBLE TUBE

Filed April 13, 1939

Fig. 1.

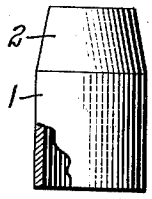

Fig. 2.

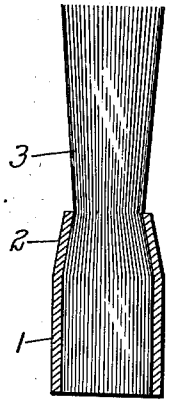

Fig. 3.

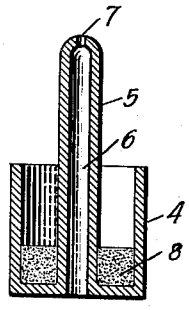

Fig. 4.

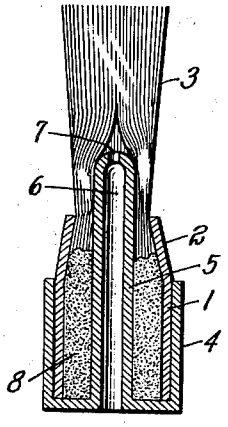

Fig. 5.

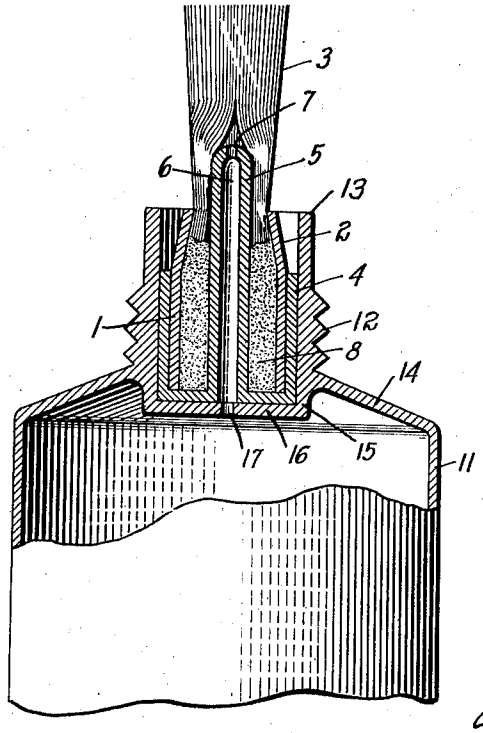

Fig. 6.

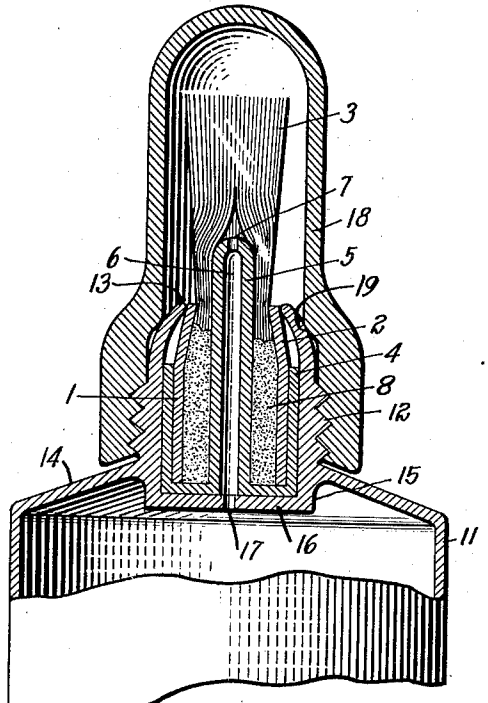

INVENTOR

Victor Hall

BY

Emery, Vanny, Whittemore & Dix

ATTORNEY

Patented Mar. 25, 1941 2,236,030

UNITED STATES PATENT OFFICE

2,236,030

COLLAPSIBLE TUBE

Victor Hall, Pelham, N. Y., assignor to The Applitube Company, Inc., Stamford, Conn., a corporation of Connecticut

Application April 13, 1939, Serial No. 267,621

6 Claims. (Cl. 15—133)

This invention relates to collapsible tubes, and pertains more particularly to tubes having a brush associated with the discharge orifice of the tube adapted to serve as an applicator for the contents of the tube.

Such tubes have many uses, but among others, may be used for applying various cosmetic preparations such as nail polish, mascara, lip rouge and the like. They may also be used for applying various other preparations such as lacquer, paint, cement, shoe polish and the like. In many of such preparations it is necessary or desirable to use highly volatile solvents or carrier mediums in order to permit quick drying, and in such cases the preparations have a tendency to dry and harden an applicator brush. One of the objects of the invention is to provide a tube and brush construction which shall eliminate, or at least minimize this tendency.

It is a further object of the invention to provide a construction which shall be simple and inexpensive to manufacture.

Other objects and advantages of the invention will appear hereinafter.

A preferred embodiment of the invention selected for purposes of illustration is shown in the accompanying drawing, in which,

Figure 1 is a side elevation of a ferrule, partly broken away.

Figure 2 is a sectional view of the ferrule with the bristles in place.

Figure 3 is a sectional view of a cup.

Figure 4 is a sectional view of the assembled ferrule and cup, which together constitute an applicator brush.

Figure 5 is a sectional view of the applicator brush placed in the neck of a tube.

Figure 6 is a sectional view of the completed tube with closure cap.

The above figures are all enlarged much beyond normal size.

Referring to the drawing, the ferrule 1 is tubular in shape and is preferably slightly constricted at its upper end 2. In the process of manufacture, a tuft of bristles 3 is inserted through the non-constricted end of the ferrule, and is pushed through the ferrule so that the bristles project through the constricted end, but are flush with the non-constricted end. The constricted end of the ferrule holds the bristles in place with sufficient firmness for convenient handling.

The cup 4 illustrated in Figure 3 is provided with a centrally disposed tubular member 5 extending vertically upward from the bottom of the cup and having a passage 6 therethrough which is open at the bottom of the cup. The upper end of the member 5 is preferably hemispherical in shape and is pierced to provide a very small discharge orifice 7.

In the process of assembly a small quantity of cement 8 is placed in the bottom of the cup, and immediately thereafter a ferrule with bristles inserted, as in Figure 2, is inserted in the cup. As the ferrule is pressed to the position shown in Figure 4, the member 5 projects through the tuft of bristles, thus wedging the bristles outwardly against the wall of the ferrule. Since the member 5 is centrally disposed, it is surrounded by a wall of bristles of substantially uniform thickness, the lower part of said wall being tightly held between the upper rim of the ferrule and the tubular member 5, and the upper part of said wall, above said rim, being free.

As the ferrule is inserted in the cup, the cement is forced upwardly into the space between the ferrule and the tubular member, thus penetrating the interstices between the bristles. In so doing, the level of the cement rises to approximately the position shown in Figure 4. After being assembled in this manner, the applicator brush is baked to harden the cement.

The applicator brush is then inserted in the neck of a collapsible tube, preferably of the construction illustrated in Figures 5 and 6. In this form the tube 11 is provided with a threaded neck 12 terminating in an annular flange 13. In the preferred embodiment illustrated, the neck is also extended downwardly below the shoulder 14 to provide a countersunk portion 15 having a horizontal wall 16 against which the applicator brush is seated. The wall 16 is provided with a small orifice 17 registering with the passage 6.

After the applicator brush is seated the flange 13 is turned inwardly against the upper edge of the ferrule 1 as shown in Figure 6, thus gripping the ferrule and holding it tightly in place.

A screw cap 18 of any desired type may be employed, but is preferably of the type illustrated in Figure 6, in which the interior wall of the cap is provided with a shoulder 19 which seats against the neck of the tube above the threaded portion to provide a tight seal.

It will be noted that the tubular member 6 projects above the rim of the ferrule for some distance, and that the bristles are not cemented to the member 6 above the ferrule. This is of importance, in that it enables the material to be discharged from the discharge orifice at a centrally located point in the body of the brush where the bristles are free to bulge laterally, so that a con-

siderable quantity of material may be held within the brush so as to feed gradually toward the tip of the brush as the brush is used. This not only improves the brush as an applicator, but is also of importance in preventing hardening of the brush, even when the cap is removed for considerable periods of time. When the cap is in place with the shoulder **19** seated against the flange **13**, the brush will remain soft almost indefinitely even when the preparation contains a highly volatile solvent or carrier.

It will be understood that the invention may be variously modified and embodied within the scope of the subjoined claims.

I claim as my invention:

1. A collapsible tube comprising a tubular body portion, a tubular neck having a diameter less than the diameter of said body portion, a shoulder connecting said body portion and neck, a wall extending transversely across said neck forming a cavity in the upper end of the neck, said tubular neck and wall being countersunk into the body portion of the tube below said shoulder, an applicator brush, a cup shaped holder surrounding and enclosing one end of said brush, said holder being mounted in said cavity and seated against said wall and extending into the body portion of the tube, said brush being provided with a passage extending from the bottom of said holder into the body of said brush, and said wall being provided with an opening registering with said passage.

2. A collapsible tube comprising a tubular body portion, a tubular neck, a wall extending transversely across said neck forming a cavity in the upper end of the neck, an applicator brush in said cavity seated against said wall, said brush comprising a tuft of bristles, an open ended cylindrical ferrule surrounding one end of said tuft leaving the other end free, a cup surrounding said ferrule, and a tubular member extending into said tuft from the bottom of said cup to a point beyond the upper edge of the ferrule, said tubular member having an opening at the bottom of the cup and having an orifice at its opposite end, and said wall being provided with an opening registering with the opening to said tubular member.

3. A collapsible tube comprising a tubular body portion, a tubular neck, a wall extending transversely across said neck forming a cavity in the upper end of the neck, an applicator brush in said cavity seated against said wall, said brush comprising a tuft of bristles, an open ended cylindrical ferrule surrounding one end of said tuft leaving the other end free, a cup surrounding said ferrule, and a tubular member extending into said tuft from the bottom of said cup to a point beyond the upper edge of the ferrule, said tubular member having an opening at the bottom of the cup and having an orifice at its opposite end, and said wall being provided with an opening registering with the opening to said tubular member, the upper edge of said neck being turned inwardly against said ferrule to hold the same in said cavity.

4. An applicator brush, comprising, in combination, a tuft of bristles, an open ended ferrule surrounding one end of said tuft leaving the other end free, a cup surrounding said ferrule, and a tubular member in contact with said bristles extending beyond the edge of said ferrule into said tuft from the bottom of said cup and wedging the bristles outwardly against said ferrule, said tubular member being open at the bottom of the cup and having an orifice at its opposite end opening into the free end of said tuft.

5. An applicator brush, comprising, in combination, a tuft of bristles, an open ended ferrule surrounding one end of said tuft leaving the other end free, a cup surrounding said ferrule, a tubular member in contact with said bristles extending beyond the edge of said ferrule into said tuft from the bottom of said cup and wedging the bristles outwardly against said ferrule, said tubular member being open at the bottom of the cup and having an orifice at its opposite end opening into the free end of said tuft, and cement in said cup penetrating said tuft in the space between said ferrule and said tubular member, but terminating below the edge of said ferrule.

6. A collapsible tube comprising a tubular body portion, a tubular neck having a diameter less than the diameter of said body portion, a shoulder connecting said body portion and neck, a wall extending transversely across said neck forming a cavity in the upper end of the neck, an applicator brush, a cup surrounding and enclosing one end of said brush, said cup being mounted in said cavity and seated against said wall, said cup being provided with a tubular member extending from the bottom of said cup into the body of said brush, said tubular member terminating in a hemispherical head pierced to provide a minute orifice, and said wall being provided with an opening registering with said passage.

VICTOR HALL.