H. A. D. BAER.

RECORD RECORDING DEVICE.

APPLICATION FILED APR. 1, 1919.

1,322,515. Patented Nov. 25, 1919.

2 SHEETS—SHEET 1.

FIG. 1.

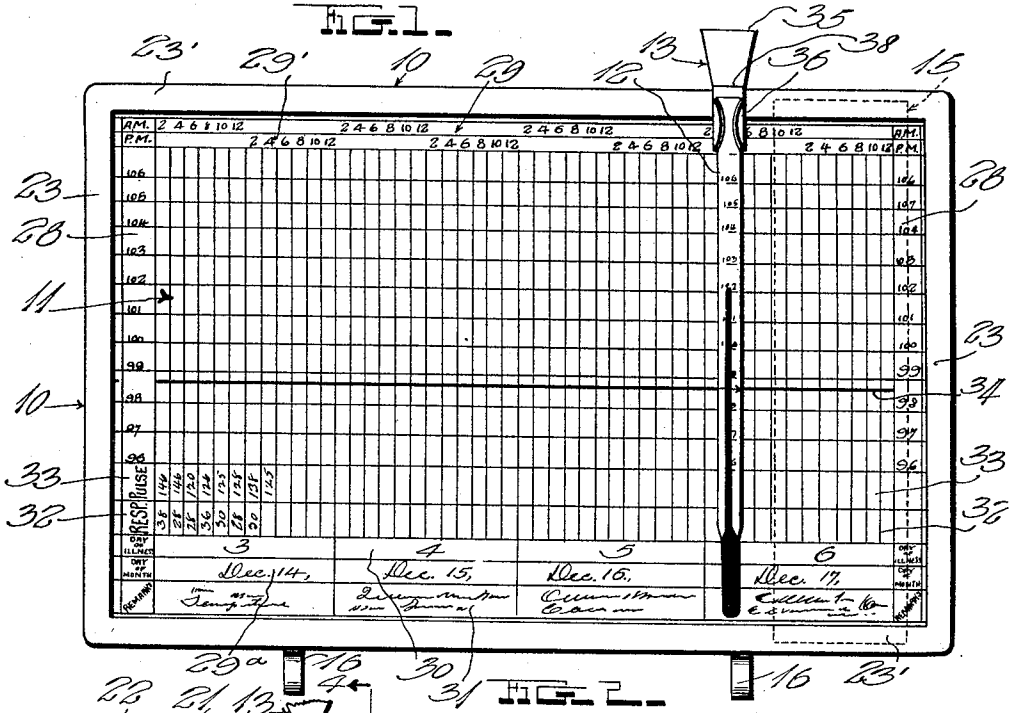

FIG. 2.

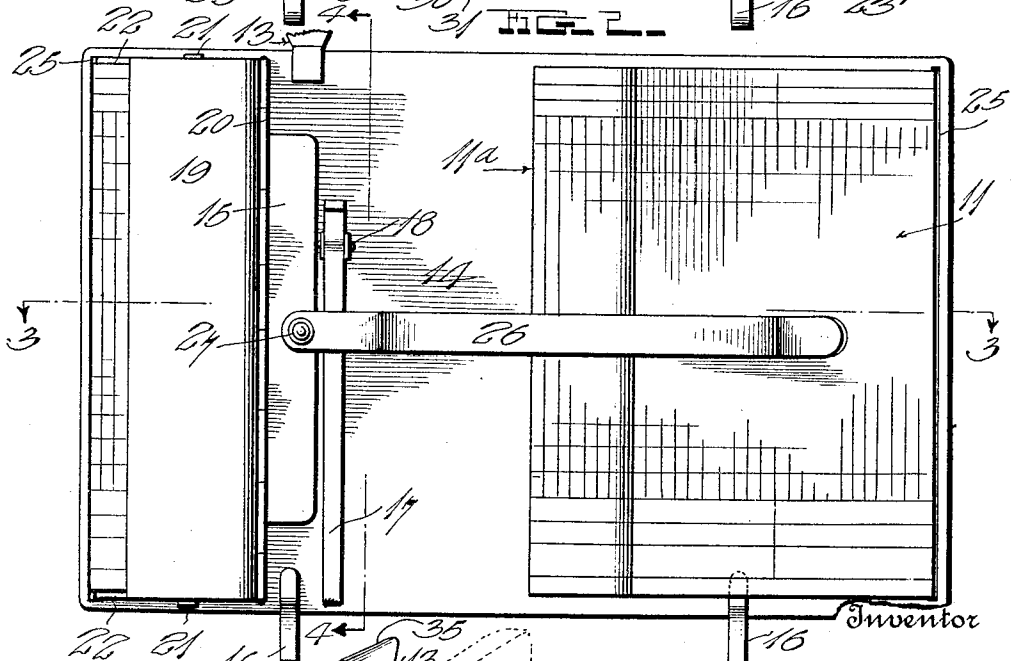

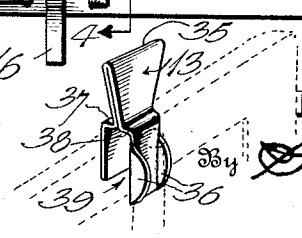

FIG. 7.

Witness
H. Woodard

Inventor
H. A. D. BAER,

By H. B. Willson & Co
Attorneys

H. A. D. BAER.

RECORD RECORDING DEVICE.

APPLICATION FILED APR. 1, 1919.

1,322,515.

Patented Nov. 25, 1919.

2 SHEETS—SHEET 2.

FIG. 3.

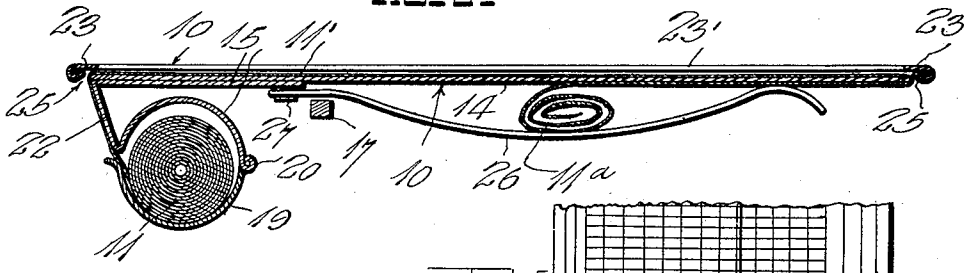

FIG. 6.

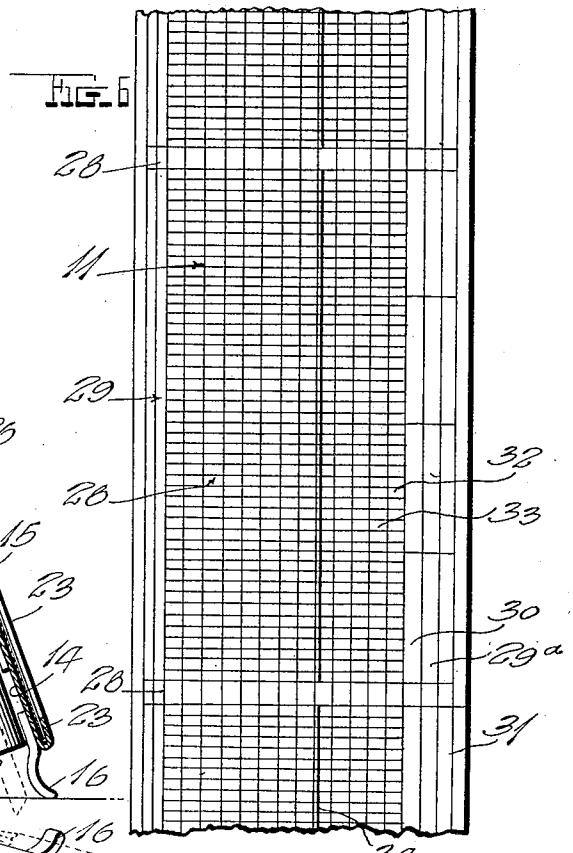

FIG. 4.

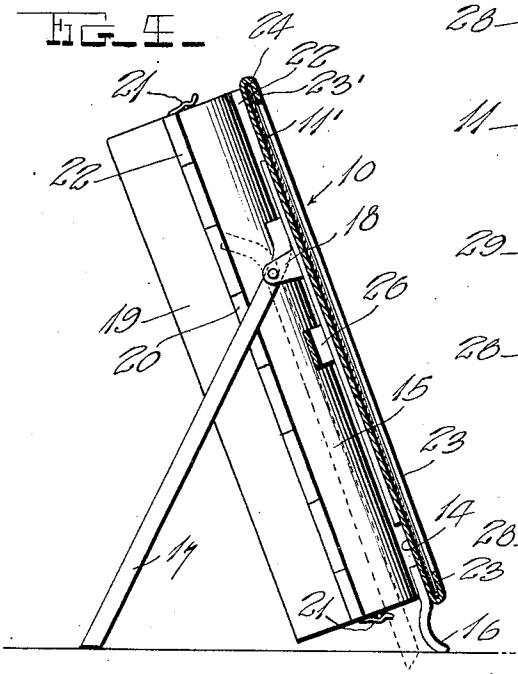

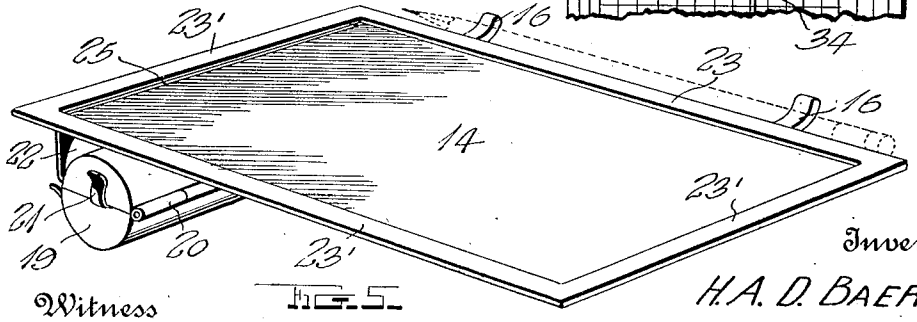

FIG. 5.

Witness
H. Woodard

Inventor
H. A. D. BAER

By H. B. Williamson & Co
Attorneys

UNITED STATES PATENT OFFICE.

HARRY A. D. BAER, OF ALLENTOWN, PENNSYLVANIA.

RECORD-RECORDING DEVICE.

1,322,515. Specification of Letters Patent. Patented Nov. 25, 1919.

Application filed April 1, 1919. Serial No. 286,675.

To all whom it may concern:

Be it known that I, HARRY A. D. BAER, a citizen of the United States, residing at Allentown, in the county of Lehigh and State of Pennsylvania, have invented certain new and useful Improvements in Record-Recording Devices; and I do declare the following to be a full, clear, and exact description of the invention, such as will enable others skilled in the art to which it appertains to make and use the same.

This invention relates to record indicating devices, and it relates more especially to an improved device for indicating the temperatures on a specially arranged clinical chart.

One object of the invention is to provide an improved, easy and convenient means whereby a person of less than ordinary ability can keep a correct record of the temperatures and other data relating to a sick patient.

A further object is to provide a device of this character whereby a person who is unable to read an ordinary thermometer, with its magnifying lens, may make the proper records from the thermometer which is associated with my clinical chart.

A further object is to provide a device of this character which will greatly aid a physician in improving his worth to a community, by enabling him to quickly and easily compare different cases of the same disease and thereby arrive at a well founded conclusion relative to the treatment of such diseases.

A further object is to provide a device of this character which will overcome the inconveniences and loss of time, as heretofore experienced, by one or more physicians, when studying the progress of a case, or giving public demonstrations to medical classes, societies, etc., by providing a single continuous clinical chart for each case of sickness, regardless of its duration, in lieu of the heretofore employed separate charts which must be joined together to form a complete record.

Another object is to provide a special mounting or connection whereby a thermometer may be quickly and easily adjusted on and detached from the frame that carries the chart.

Another object is to provide an improved frame on which the chart and thermometer are adjustably seated.

Other objects and advantages may become apparent to persons who read the following details of description in connection with the accompanying drawings in which:

Figure 1 is a front elevation of my improved record indicating device.

Fig. 2 is a rear view, a portion of the thermometer-supporting clip being broken off.

Fig. 3 is a longitudinal sectional view along the line 3—3 of Fig. 2.

Fig. 4 is a left hand elevation of the device.

Fig. 5 is a perspective view illustrating my improved frame which supports the chart and thermometer.

Fig. 6 illustrates a fragment of the raised and graduated strip on which the clinical records are to be made.

Fig. 7 is a perspective view illustrating my improved supporting clip, the articles supporting and being supported by the clip being illustrated in dotted lines.

Referring to these drawings in detail, in which similar reference characters correspond with similar parts throughout the several views, the device broadly comprises a supporting frame 10, a clinical chart 11, a clinical thermometer 12 and a supporting clip 13.

The frame 10 consists of a plate 14, a plate or scroll holder element 15, front legs 16, and a rear leg or prop 17, the latter being pivotally connected to ears 18 which extend rearwardly from the plate 14. The frame 10 is normally seated on the legs 16 and 17 in the position illustrated in Figs. 1 and 4, but the general utility of the device is not dependent upon the particular means of supporting the frame.

An end portion of the member 15 is secured to the plate 14 by any preferred means, and its opposite end portion is curved to form a semi-cylindrical portion of a scroll holder, a second semi-cylindrical portion 19 being secured to the member 15 by means of a hinge joint 20, and spring catches 21 may be employed for securing the scroll holder in its closed position, as clearly shown in Figs. 4 and 5. The intermediate portion 22 of the member 15 forms a connection between the plate 14 and scroll holder, whereby the former supports the latter.

The plate 14 is preferably plane throughout its major portion, and is rectangular and has its four edge portions turned in-

wardly over its front surface, and these edge portions 23 and 23′ form flanges which are united by appropriate means at the corners of the plate so as to form a continuous frame-like structure which is spaced from the front surface of the plate as indicated at 24 in Fig. 4. The plate 14 is also formed with parallel slots 25, as shown in Figs. 2 and 3, these slots being disposed under the upright flanges 23, so as to be concealed.

The ends of the slots 25 terminate at the juncture of the flanges 23 and 23′, for a purpose which will hereinafter become apparent.

The chart 11 such as illustrated in Figs. 1 and 6, is disposed partly in the scroll holder 15—19, partly on the front surface of the plate 14, as shown at 11′, and partly under the opposite end of the plate 14 from the scroll holder, as illustrated at 11ª. In other words, the chart 11 comprises the scroll which is contained in the scroll holder 15—19, the extension thereof which is superposed in the front of the plate 14, and the further extension or end portion which is disposed on the rear side of the plate at 11ª. In order that the portion 11ª may be secured in or substantially in the position shown, a leaf spring 26 is supported on the back of the plate 14 by a pivot 27, and the other end portion of the spring 26 normally presses the strip or chart against the back of the plate 14. The middle portion of the spring 26 is bowed outwardly so as to provide a relatively wide space between itself and the back of the plate 14 so that the used portion of the strip or chart may be contained within this pocket-like space without being unduly compressed and creased. In order that the spring 26 may be engaged with and disengaged from the rolled or folded end portion 11ª, it may be swung laterally about its pivot 27 in a direction substantially along the axis of the scroll or rolled end portion 11ª.

The strip 11 is approximately as wide as the length of the slots 25, so that its lateral edges are confined in the space between the front side of the plate 14 and the flanges 23, the latter serving to guard and protect said lateral edges, also serving to hold the strip or chart against movement away from the front surface of the plate 14. It will be seen, therefore, that the chart is adjustable or longitudinally movable along the plate 14, and such movement may be effected by disengaging the spring 26 from the end portion 11ª and then pulling said end portion so as to cause movement of the portions 11′ and 11, the latter being thereby rotated in the scroll holder. The object of such adjustment is to bring different sections of the strip or chart upon the record supporting surface of the plate 14. In this connection, it will be observed that the chart 11 comprises a series of sections which are made distinct from one another by the provision of laterally extending thermatic scales or series of graduations 28. This series of graduations are spaced from each other a distance approximately equal to the distance between the parallel flanges 23; that is, each section of the strip or chart is co-extensive with the surface defined within the flanges 23 and 23′, and when a record has been completed upon one of these sections, a succeeding section is brought into the record-receiving position shown in Fig. 1.

In addition to the series of thermatic graduations 28, the chart is provided with a chronological scale 29, this scale being divided by graduations representing hours, as indicated at 29′, and the days of the month as indicated at 29ª. By referring to Fig. 1, it will be seen that four days are represented at one time on the visible recording surface of the chart, viz., December 14, 15, 16 and 17. However, these dates are only given as examples, and any convenient number of days may be represented at a time on the recording surface. In addition to the days of the month, the chart may be provided with spaces for indicating the number of days during which the patient has been ill or under treatment, as indicated at 30, and spaces 31 may be provided for miscellaneous data, or remarks, including special examinations, history of the case being treated, etc. The chart may also be provided with blanks 32 for indicating the condition or degree of respiration, while blanks 33 are provided for indicating the number of pulsations. Appropriate words are printed at the foot of each series of thermatic graduations to indicate the purpose of the blanks 29ª to 33 respectively, and the abbreviations "A. M." and "P. M." are printed at the head of each series of thermatic graduations. In this connection it is noted that the numbers 2, 4, 6, etc., in the "A. M." series are in a plane above similar number of the "P. M." series, so that any confusion of these two series is obviated.

Each section of the chart is ruled vertically to conform with numerals representing hours, at 29′, to be filled in by the physician, and every twelfth line is extended downwardly to separate the days of the month from one another. Moreover, each section of the chart is ruled horizontally, and these horizontal rules or lines register with the graduations of the thermatic series 28. The normal graduation 98¼ has an extra heavy or prominent line 34 registering therewith, but the provision of this prominent normal line is not a feature of my invention, except in connection with the thermometer 12 and the thermometer holder 18 as will be apparent hereinafter.

The graduations on the clinical thermometer 12 may be numbered from 96 to 106 as

shown, or in any other appropriate way, and the graduations in the series 28 of the chart correspond to those of the thermometer. Moreover, as shown in Fig. 1, the thermometer is normally attached to the chart, through the medium of the frame 10 and support 13, in such position that the normal of the thermometer always registers with the normal of the graduation series 28; that is, when the thermometer is properly adjusted in any position along the upper flange 23′, its normal graduation registers with the normal line 34, and of course, its other graduations are practically in registration or in horizontal alinement with the corresponding graduations of the series 28. In order that the thermometer may be accurately positioned in its different adjustments by any person of or less than ordinary ability, the special supporting element 13 is formed, as indicated in Fig. 7, of a single blank of sheet material; the blank being preferably stamped from springy sheet metal and folded upon itself at its middle portion, as indicated at 35, being also formed with ears 36 which are turned inward over one end portion of the blank and constitute spring clamping elements whereby the thermometer is clamped as shown in Fig. 1. The blank is formed with shoulders 37 and 38 adjacent to its end portions, these shoulders being formed by bends extending laterally of the blank between the ears 36 and middle fold 35. Although the middle portions of the blank are juxtaposed or lie flat against one another, they are not secured together, but may be separated when it is necessary to widen the space 39 between the ends of the clip or support 13, so that these ends constitute clamping jaws which coact with the springy middle portions to clamp the upper edge of the frame 10 as indicated in Fig. 7. It will be seen that the shoulders 37 and 38 rest upon the extreme upper edge of the frame and determine the correct relation of the thermometer to the thermatic scale of the chart, it being understood that any appropriate means may be employed as an auxiliary to the spring action of the ears 36 for holding the thermometer in the correct relation to the clip 13. Although this spring clip is especially useful for the purpose disclosed in the foregoing, it may be found useful in other relations, and the ears 36 may be employed for engaging a support for the clip 13, while the article to be supported may be engaged in the space 39 between the spring-pressed ends of the clip.

This thermometer is flat on the back, or nearly a half cylinder, with no magnifying lens, with wide spacings, and therefore easily readable.

By the use of this device the physician is able to have the same clinical data in the private family where they are unable to have a nurse, as he could in a hospital. A physician naturally treats more patients in a home than in a hospital. With the aid of this device any member of the family can secure the desired data after but slight instructions by the physician in charge. Even where a nurse is at hand in a private home, this device serves as an appropriate, compact, and convenient way of keeping records. By having these records of private cases at home the physician naturally will file them and later can quickly and easily compare different cases.

Although I have described this embodiment of my invention very specifically, it is not intended to limit this invention to these exact details of construction and arrangement of parts, but I am entitled to make changes within the scope of the inventive ideas disclosed in the foregoing description and following claims.

I claim as my invention:

1. In a record indicating device, a thermometer, a chart having a series of thermal graduations thereon to correspond with the graduations of the thermometer, said chart also having a chronological scale thereon, said thermometer being mounted for adjustment along said chronological scale, and means to guide said thermometer and chart with relation to one another in a manner to retain a graduation of the thermometer in a definite correlation with the corresponding graduation of said series of thermal graduations during the adjustment of the thermometer along said chronological scale.

2. In a record indicating device, a clinic thermometer having graduations thereon including a normal graduation, a chart having a series of thermal graduations thereon including a normal graduation, said chart also having a prominent normal temperature line thereon and uniting with said normal graduation of said series at an angle to the latter, said thermometer and chart being connected for adjustment relative to one another, and means to guide said thermometer and chart relative to one another during said adjustment and in such relation that the normal graduation of the thermometer always registers with said prominent temperature normal line when the adjustment is completed.

3. The combination of a frame, a chart comprising a visible thermal indicating line and being mounted for adjustment on the frame in a direction along said thermal-indicating line, and a thermometer mounted on said frame and being adjustable thereon transversely of said thermal indicating line and guided thereby along the latter.

4. The combination with a plate, a scroll holder associated therewith, and a scroll in and extending from said scroll holder and having its extended portion superposed on

and movable across said plate in a predetermined direction, of a thermometer mounted on and extending across said plate at an angle to said direction of movement of the scroll's extended portion, said scroll having thereon a thermal indicating line that extends in the direction of its movement and registers with a predetermined graduation of said thermometer.

5. The combination of a rectangular plate having all four edges turned inwardly to form flanges over and spaced from one of its surfaces and having slots under two of said flanges and extending to the junction of the other two flanges, a scroll holder fixed to the side of the plate opposite said flanges, said holder being disposed adjacent one of said slots and extending in the direction of the same, said holder being formed out of two semi-circular members, one of said members being secured to the plate and the other member being hingedly connected to the first member, means for maintaining said members in relatively closed position, and a scroll disposed in said scroll holder and having portions extending through said slots and normally lying on the part of the plate between said slots, two edges of said portions being disposed in the spaces under said other two flanges.

6. In a device of the character set forth, a plate, a flexible strip having its intermediary portion superposed on and movable along one surface of the plate and having its end portions disposed on the opposite surfaces of the plate and adapted to be formed into scrolls, means to yieldingly hold one of said end portions of the strip, and a bowed leaf spring pivotally connected to the second said surface of the plate and adapted to hold a scroll-end portion of the strip between its concaved portion and the adjacent surface of the plate, said leaf spring being swingable on its pivot along the axis of said scroll-end portion for effecting engagement and disengagement thereof with the scroll-end portion of the strip.

7. A spring clip formed integrally of a relatively long and narrow blank of springy sheet material and comprising laterally extending ears at one end portion, said ears being turned inward over one face of the blank and adapted to clamp an article, said blank being folded along a laterally extending line at its middle portion and offset along a laterally extending line between said middle portion and one of its end portions so that said end portions are spaced from one another and provided with a shoulder at the offset portion, said folded middle portion being widest at its fold and being tapered toward said shoulder and ears and constituting a spring which permits the space between said end portions to be widened substantially as shown.

In testimony whereof I have hereunto set my hand.

HARRY A. D. BAER.