June 23, 1959 E. J. WALKER ET AL 2,892,054

CIRCUIT BREAKER

Filed Nov. 30, 1956 2 Sheets-Sheet 1

Fig. 1.

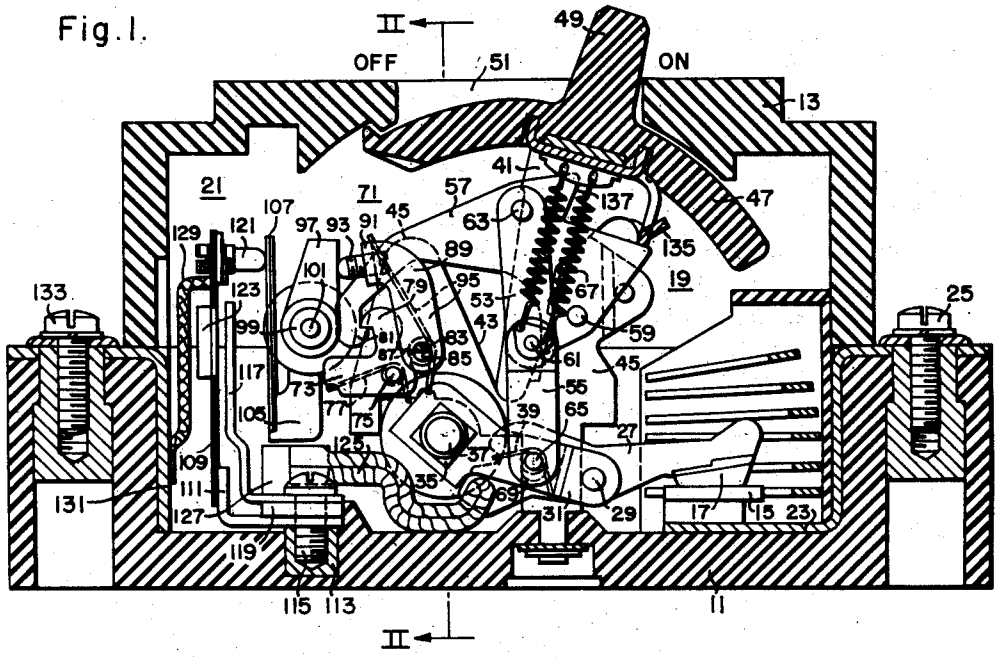

Fig. 2.

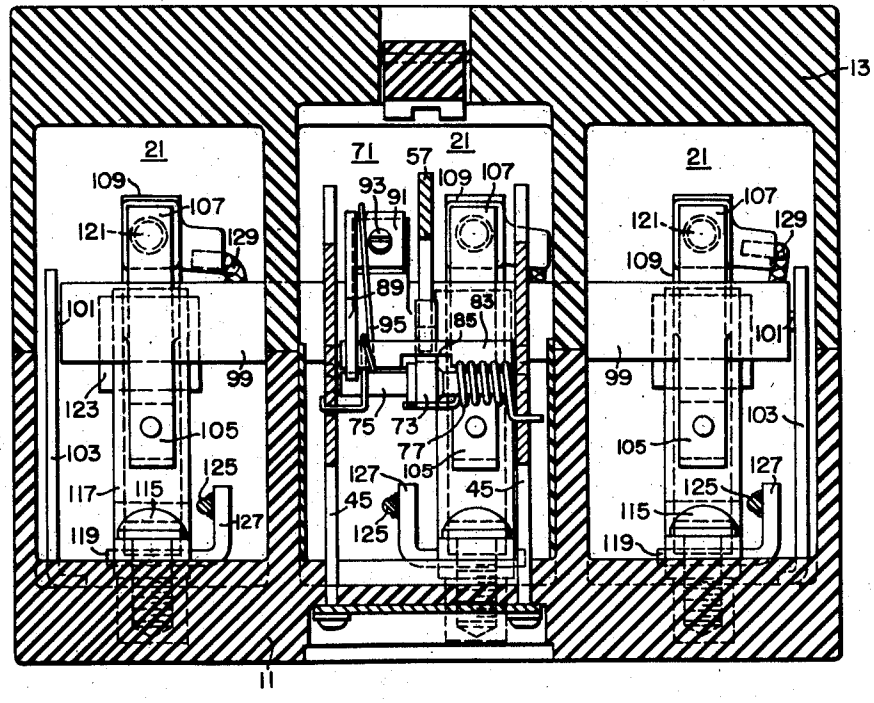

June 23, 1959 E. J. WALKER ET AL 2,892,054

CIRCUIT BREAKER

Filed Nov. 30, 1956 2 Sheets-Sheet 2

Fig.3.

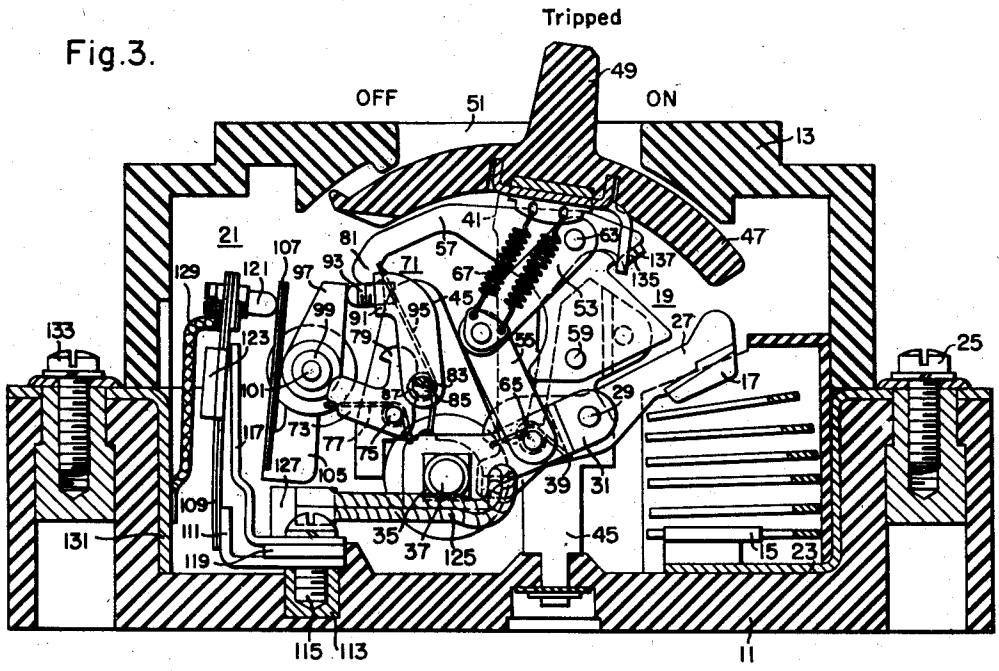

Fig.4.

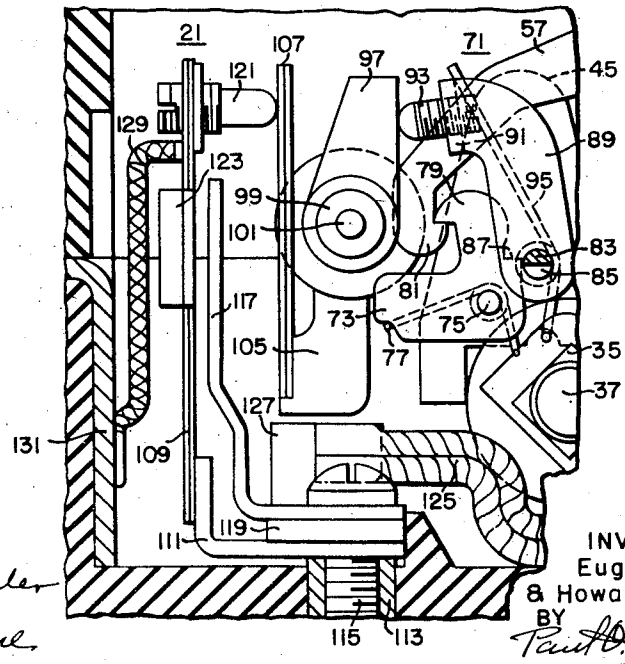

WITNESSES

Edwin E. Bassler

Mur C. Groome

INVENTORS

Eugene J. Walker

& Howard E. Reichert

BY

Paul A. Harber

ATTORNEY

United States Patent Office 2,892,054
Patented June 23, 1959

2,892,054

CIRCUIT BREAKER

Eugene J. Walker and Howard E. Reichert, Beaver, Pa., assignors to Westinghouse Electric Corporation, East Pittsburgh, Pa., a corporation of Pennsylvania

Application November 30, 1956, Serial No. 625,297

13 Claims. (Cl. 200—88)

This invention relates to circuit breakers, and more particularly, to circuit breakers for controlling lighting and moderate power circuits.

An object of the invention is to provide a circuit breaker embodying an improved trip device. By using this invention it has been found possible to build an operating and trip mechanism for a 480 or 600 volt circuit breaker in a housing of the size used for a 250 volt breaker.

Another object of the invention is to provide a circuit breaker embodying a trip device having a light-load latch mechanism.

Another object of the invention is to provide a circuit breaker embodying an accurate and a high-speed trip device.

Another object of the invention is to provide a circuit breaker embodying an improved trip device having a tripping bimetal element and an ambient temperature compensating bimetal element in which the ambient temperature compensating bimetal is protected from the heat of the tripping bimetal element.

Another object of the invention is to provide a circuit breaker with an improved trip device embodying bimetallic tripping means, bimetallic temperature compensating means and magnetic tripping means in which a portion of the magnetic tripping means is disposed between the bimetalic elements to shield the temperature compensating element from the heat of the bimetallic tripping element.

The invention, both as to structure and operation, together with additional objects and advantages thereof, will be best understood from the following detailed description thereof when read in conjunction with the accompanying drawings.

In said drawings:

Figure 1 is a vertical sectional view of a circuit breaker embodying the principles of the invention.

Fig. 2 is a vertical sectional view taken on line II—II of Fig. 1 and looking in the direction indicated by the arrows.

Fig. 3 is a vertical sectional view similar to Fig. 1 but showing the breaker in the tripped open position.

Fig. 4 is an enlarged elevational view of the latch mechanism and the trip device.

Referring to Fig. 1 of the drawings, the circuit breaker is of the three-pole type and comprises a base 11 and a cover 13 both of molded insulating material. A stationary contact 15 and a movable contact 17 are provided for each pole of the breaker. The circuit breaker also comprises an operating mechanism 19 and a trip device 21.

The stationary contact 15 for each pole of the breaker is rigidly mounted on the inner end of a conducting strip 23, the outer end of which is secured by means of a line terminal connector 25 to a metal insert molded in the base 11. The movable contact 17 for each of the poles is mounted on a contact arm 27 which is pivotally mounted by means of a pin 29 on a switch arm 31. The

switch arms for the several poles of the breaker are secured to an insulated tie bar 35 which is pivotally supported in brackets (not shown) by means of pins 37 in the ends of the tie bar. Springs 39 bias the contact arms 27 clockwise about the pin 29 to provide contact pressure in the closed position of the switch arm.

The operating mechanism 19 is disposed in the center pole and comprises a U-shaped operating lever 41 having its inner ends pivoted in V-shaped notches 43 in a pair of spaced metal frame members 45 mounted in the bottom portion of the base 11. The operating handle has an arcuate shield 47 mounted on the outer end of the operating lever 41 and has a handle portion 49 extending out through an opening 51 in the cover 13. The switch arm 31 for the center pole is operatively connected by means of a toggle comprising toggle links 53 and 55 to a releasable member or cradle 57 which is pivotally mounted on a pin 59 supported in the frames 45. The toggle links 53 and 55 are pivotally connected together by a knee pivot pin 61. The toggle link 53 is pivotally connected to the releasable cradle 57 by a pivot pin 63 and the toggle link 55 is pivotally connected to the switch arm 31 for the center pole by a pivot pin 65. Overcenter springs 67 are connected under tension between the knee pivot pin 61 of the toggle 53—55 and the yoke portion of the operating lever 41.

The contacts are manually opened by movement of the operating lever 41 in a counterclockwise direction (Fig. 1) from the "on" to the "off" position. This movement carries the line of action of the overcenter springs 67 over to the left of the pivot pin 63 which causes collapse of the toggle 53—55 and simultaneous opening of the contacts for all of the poles of the breaker. A latch mechanism indicated generally at 71 holds the cradle 57 stationary at all times except when it is actuated by the trip device 21 in response to overload currents.

The switch arms 31 for each of the poles comprise a pair of arms 31 (only one being shown) with the contact arm 27 disposed therebetween. The toggle link 55 comprises a pair of spaced links (only one being shown) disposed one on the outside of each of the switch arms 31. The pivot pin 65 extends through both of the toggle links 55, both of the switch arms 31 and through an elongated slot 69 in the inner end of the contact arm 27. The slot 69 provides a lost-motion connection between the switch arms 31 and the contact arms 27. This permits movement of the contact arm relative to the switch arm so that the spring 39 can provide contact pressure. The slot 69 also permits a wiping action between the contacts on opening and closing thereof and also compensates for contact wear.

The contacts are manually closed by reverse movement of the operating lever 41 by the handle 49. When the handle is moved from the "off" to the "on" position the line of action of the overcenter springs is shifted to the right of the pivot 63 whereupon the springs straighten the toggle 53—55 and close the contacts with a snap action.

The contacts are opened automatically in response to overload currents occurring in any pole of the breaker by release of the releasable cradle member 57. The cradle is normally releasably restrained in operative position by means of the latch mechanism indicated generally at 71 which is actuated by the trip device 21 to release the cradle 57. When released the cradle 57 rotates clockwise about its pivot 59 under the influence of the overcenter springs 67 and moves the pivot point 63 over to the right of the line of action of the overcenter springs which then cause collapse of the toggle and opening movement of the switch arms 31.

The latch mechanism, shown best in Fig. 4, comprises a main latch 73 pivoted on a pin 75 at a fixed point in

the frame 45 and biased by a spring 77 in unlatching direction. The main latch 73 has a latching portion 79 which engages a latch tip 81 on the free or latching end of the cradle 57 to releasably hold the cradle in operative position. The latch tip 81 is in-turned and faces generally in the direction toward the pivot 59 about which it moves and toward the end of the breaker where the contacts are located. The latch 73 is of the non-critical slip-off type and is releasably held in latching position by a light-load cylindrical latch which comprises a rotary shaft 83 (Figs. 1, 2 and 4) pivotally mounted at a fixed point in the metal frame 45 and having a cut-out portion 85 engaging a shoulder 87 on the main latch 73. Accuracy of tripping and compactness are attained by having the releasable member 57 and the two latch members 73 and 83 all pivoted at fixed points on the same metal frame 45 so that a constant relation is maintained between them. The latch 83 is the critical one determining the tripping point of the breaker and has an upwardly extending arm 89 secured thereto which, at its upper end, has an ear 91 formed thereon. An adjusting screw 93 threaded into the ear 91 is movable into engagement with a projection 97 on a trip bar 99. A spring 95 biases the arm 89 and rotary shaft 83 to latching position where it is stopped by engagement of the screw 93 with the projection 97 on the trip bar.

The trip bar 99 is of molded insulating material and the projection 97 is molded integral therewith. The trip bar 99 is pivotally supported by means of pins 101 (Fig. 2) molded in the ends thereof which are supported in brackets 103 mounted in the end poles of the breaker adjacent the sidewalls of the housing. The trip bar 99 is provided with a downwardly extending projection 105 for each pole of the breaker on which is rigidly mounted an ambient temperature compensating bimetal element 107 which is adapted to be mechanically actuated by the trip device 21 to operate the trip bar 99.

The trip device 21 for each pole comprises a tripping bimetal element 109 secured to a mounting foot 111 which is, in turn, rigidly mounted on a metal insert 113 molded in the base 11 of the housing. The mounting foot 111 is rigidly secured to the insert 113 by a screw 115 which also secures a fixed magnetic member 117 to the base with a terminal 119 between the mounting foot 111 and the magnetic member. The bimetal elements 109 for the three poles are positioned between the end of the breaker and the trip bar 99 and on the opposite side of the trip bar from the pivots of the latch members 75 and 83. At its upper or free end the tripping bimetal element 109 has an adjusting or calibrating screw 121 mounted thereon which, upon thermal bending of the bimetal element in response to low overload currents, engages the free end of the compensating bimetal 107 to rotate the trip bar 99 gradually in a clockwise direction about its pivot 101. A movable magnetic member or armature 123 is rigidly secured to the tripping bimetal element 109 adjacent the upper end of the fixed magnetic member 117 and on the opposite side of the bimetal therefrom. The armature 123 is attracted to the fixed magnetic member 117 in response to excessive overload currents and bends the tripping bimetal element 109 to effect instantaneous operation of the trip bar 99.

The movable contact arm 27 for each pole is connected by means of a flexible conductor 125 to an upwardly extending portion 127 of the terminal 119. A flexible conductor 129 connects the free end of the tripping bimetal 109 to the inner portion of a conducting strip 131 which is provided at its outer end with a load terminal connector 133.

The high expansion sides of tripping bimetal element 109 and of the compensating bimetal element 107 are both on the left side of the bimetal elements as seen in the drawings, so that both of the bimetal elements will deflect in the same direction in response to changes in the ambient temperature thus compensating the tripping bimetal element for changes in ambient temperature. It will be noted that the fixed magnetic member 117, which is wider than either of the bimetal elements, is disposed between the bimetal elements 107 and 109 so as to shield the compensating bimetal 107 from the heat of the current carrying tripping bimetal element 109.

When a low persistent overload current occurs the bimetal element 109 becomes heated and when heated a predetermined amount bends toward the right. This movement through the screw 121 and the compensating bimetal 107 rotates the trip bar 99 gradually in a clockwise direction an amount determined by the one of the bimetal elements which has moved the greatest distance. This movement of the trip bar causes the upper projection 97 to gradually rotate the arm 89 and the rotary latch shaft 83 clockwise until it reaches the point where it frees the main latch 73. The latching point of the main latch 73 and the latching portion 81 of the cradle 57 is to the left of the pivot 75; hence, the latch 73 is biased in unlatching direction by a component of the force exerted by the overcenter springs 67 as well as by the spring 77. When the main latch 73 is released by the light-load trigger latch member 83 it is immediately snapped to the unlatching position releasing the cradle or releasable member 57 to effect opening of the contacts in the previously described manner. The circuit breaker is shown in Fig. 3 in the tripped open position.

Before the contacts can be closed following an automatic opening operation it is necessary to reset and relatch the mechanism. This is accomplished by moving the handle 49 counterclockwise from the intermediate "tripped" position in which it is shown in Fig. 3 to the "off" position. During this movement a projection 135 on the operating lever 41 engages a shoulder 137 on the cradle 57 and moves the cradle 57 counterclockwise about its pivot 59. Near the end of this movement the lower rounded or cylindrical portion of the latch end 81 of the cradle 57 engages the outwardly extending arm of the bell-crank shaped latch member 73 and moves it to its latching position. As soon as the latch shoulder 87 of the latch 73 clears the corner of the partially cylindrical portion of latch 83, the spring 95 restores the arm 89 to its normal position moving the latch 83 to its latching position. The latching portion 79 of the latch 73 is then over and engages the latch end 81 of the cradle when the contacts are closed in the previously described manner by movement of the handle to the "on" position.

The invention provides a circuit breaker embodying an improved thermal and magnetic trip device including a compact high-speed low friction latch mechanism. Ambient temperature compensating means is provided for compensating the thermal trip means for changes in ambient temperature. The compensating means is shielded from the heat of the tripping thermal element by a portion of the magnetic trip means.

While the invention has been disclosed in accordance with the provisions of the patent statutes, it is to be understood that various changes in the structural details and arrangement of parts thereof may be made without departing from the spirit of the invention.

We claim as our invention:

1. A circuit breaker having relatively movable contacts and means releasable to effect opening of said contacts, latch means releasably restraining said releasable means and operable to release said releasable means, a trip member separate from said latch means and movable to operate said latch means, a trip device comprising a current responsive bimetal element, an ambient temperature responsive bimetal element having one end mounted on said separate trip member and its other end engageable by said current responsive bimetal element upon thermal bending thereof to move said separate trip member, electromagnetic trip means comprising a fixed

magnetic member disposed between said current responsive bimetal element and said ambient temperature responsive bimetal element to shield the latter from the heat of the current responsive bimetal element, and a movable magnetic member operable when said electromagnet is energized to bend said current responsive bimetal and cause the latter to instantaneously engage said ambient temperature responsive bimetal and move said separate trip member.

2. A circuit breaker having relatively movable contacts and means releasable to effect opening of said contacts, a latch mechanism releasably restraining said releasable means and operable to release said releasable means, a trip member separate from said latch mechanism and movable to operate said latch mechanism, a trip device comprising a current responsive bimetal element having one end mounted and the other end free, an ambient temperature responsive bimetal element having one end mounted on said separate trip member and the other end free, said ambient temperature responsive bimetal element extending along one side of said current responsive bimetal element and spaced therefrom, thermal bending of said current responsive bimetal element causing the free end thereof to engage the free end of said ambient temperature responsive bimetal element and move said separate trip member, electromagnetic trip means comprising a magnetic member fixedly mounted at one end and extending between said bimetal elements to shield the ambient temperature responsive bimetal element from the heat of the current responsive bimetal element, and an armature mounted on said current responsive bimetal element operable upon energization of said electromagnet to bend said current responsive bimetal and cause said current responsive bimetal to engage said ambient temperature responsive bimetal and instantaneously move said trip member.

3. A circuit breaker having relatively movable contacts and means releasable to effect opening of said contacts, latch mechanism comprising a pivoted latch engaging and releasably restraining said releasable means, a cylindrical latch having its periphery engaging and releasably restraining said pivoted latch in latching position, an actuating arm on said cylindrical latch, a trip member separate from said cylindrical latch and movable to engage said actuating arm and actuate said cylindrical latch to permit said pivoted latch to release said releasable means, and trip means operable in response to overload currents to move said trip member.

4. A multipole circuit breaker having relatively movable contacts in each pole and operating mechanism releasable to effect automatic opening of said contacts, latch means operable to release said operating mechanism, a trip member common to all of the poles of the breaker movable to operate said latch means, trip means comprising a current responsive bimetal element for each pole, an ambient temperature responsive bimetal element for each pole, each of said ambient temperature responsive bimetal elements having one end mounted on said common trip member and its other end engageable by the current responsive bimetal element for the corresponding pole upon thermal bending thereof to move said common trip member, electromagnetic trip means comprising a fixed magnetic member for each pole disposed between said current responsive bimetal element and the temperature responsive bimetal element for the corresponding poles to shield the temperature responsive bimetal elements from the heat of their corresponding current responsive bimetal elements, and an armature operable upon energization of the electromagnet for any of the poles to bend the corresponding current responsive bimetal and cause said current responsive bimetal to engage said ambient temperature responsive bimetal and instantaneously move said common trip member.

5. A multipole circuit breaker having relatively movable contacts in each pole and operating mechanism releasable to effect automatic opening of said contacts, a latch mechanism operable to release said operating mechanism, a trip member common to all of said poles movable to operate said latch mechanism, a trip device comprising a current responsive bimetal element for each pole having one end mounted and the other end free, an ambient temperature responsive bimetal element for each pole having one end mounted on said common trip member and the other end free, thermal bending of any of said current responsive bimetal elements causing the free end thereof to engage the free end of the corresponding ambient temperature responsive bimetal element and move said trip member, electromagnetic trip means comprising a fixed magnetic member for each pole extending between the corresponding current responsive and ambient temperature responsive bimetal elements to shield the latter from the heat of the corresponding current responsive bimetal element, and an armature for each of said current responsive bimetal elements attracted to the corresponding fixed magnetic member when the latter is energized by overload currents to bend the corresponding current responsive bimetal element and cause it to engage said ambient temperature responsive bimetal and instantaneously move said common trip member.

6. A multipole circuit breaker having relatively movable contacts in each pole and an operating mechanism releasable to effect automatic opening of said contacts, latch mechanism comprising a pivoted latch operable to release said operating mechanism, a trip shaft having its periphery engaging and restraining said pivoted latch in latching position, said trip shaft having a transversely extending notch adjacent said pivoted latch and being operable to release said pivoted latch, an actuating arm on said trip shaft, a trip member spaced from said trip shaft and common to all of the poles having a projection thereon, said common trip member being movable to cause said projection to engage said actuating arm and actuate said trip shaft to thereby release said pivoted latch and permit said pivoted latch to release said operating mechanism, and a trip device for each pole operable to move said common trip member.

7. A multipole circuit breaker having relatively movable contacts for each pole and operating mechanism releasable to effect automatic opening of said contacts, latch means operable to release said operating mechanism, a trip member common to all of said poles movable to operate said latch means, a thermally responsive bimetal element for each pole disposed at one side of said common trip member and heated in response to the current of the circuit of the associated pole, an ambient temperature responsive bimetal element for each pole mounted on said common trip member on the side thereof adjacent said current responsive bimetal elements, said current responsive bimetal elements upon thermal bending thereof engaging the corresponding ambient temperature responsive bimetal element and moving said common trip member, electromagnetic trip means comprising a fixed magnetic member for each pole extending between said current responsive and ambient temperature responsive bimetal elements for the associated poles, and an armature on the current responsive bimetal element for each pole operable upon energization of the associated electromagnet to bend the current responsive bimetal element for the affected pole and cause it to engage the corresponding ambient temperature responsive bimetal and instantaneously move the common trip member.

8. In a circuit breaker, relatively movable contacts, operating mechanism including a handle member movable to open and close the contacts and a releasable member pivoted at a fixed point and movable about its pivot when released to cause opening of the contacts, latch means holding said releasable member stationary during opening and closing of the contacts by the han-

dle member, an in-turned latching portion on said releasable member, said latch means including a latch member pivoted at a fixed point under the length of said releasable member and engaging the in-turned latching portion thereof, a trip bar pivoted at a fixed point spaced from said latch means and movable to move a part of said latch means an amount determined by the amount of movement of the trip bar until the releasing point of the latch means is reached, and thermal current responsive means for causing gradual releasing movement of said trip bar as the current responsive means is heated by the current flow.

9. In a circuit breaker, relatively movable contacts, operating mechanism including a handle member movable to open and close the contacts and a releasable member pivoted at a fixed point and movable about its pivot when released to cause opening of the contacts, latch means holding said releasable member stationary during opening and closing of the contacts by the handle member, an in-turned latching portion on said releasable member, said latch means including a latch member pivoted at a fixed point under the length of said releasable member and engaging the in-turned latching portion thereof, a second latch member also pivoted at a fixed point under the length of said releasable member and having a latch portion close to the pivot thereof in latching engagement with the first said latch member, an arm on the second latch member extending to a distance from its pivot point, and current responsive means for engaging and moving said arm and disengaging said latches.

10. In a circuit breaker, relatively movable contacts, a manually actuable operating mechanism for opening and closing said contacts, a metal frame supporting said operating mechanism, said operating mechanism including a releasable member pivoted on the operating mechanism frame at a fixed point and operable when released to cause opening of the contacts, a latch tip on said releasable member facing generally in a direction toward the pivot of the releasable member, a first latch member pivoted at a fixed point on said metal frame of the operating mechanism and normally engaging and holding the latch tip on the releasable member during manual actuation of the operating mechanism to open and close the contacts, said first latch member being biased to released position, a second latch member normally holding said first latch member against its bias, a trip bar separate from said latch members, a plurality of bimetal elements for moving said trip bar, a portion on said separate trip bar for engaging and gradually moving said second latch member as the trip bar is moved until the first latch member is released, and then causing immediate disengagement of said first latch member from said latch tip to cause movement of the releasable member and opening of the contacts.

11. In a circuit breaker, relatively movable contacts adjacent one end of the breaker, a manually actuable operating mechanism for opening and closing said contacts, a metal frame supporting said operating mechanism, said operating mechanism including a releasable member pivoted on the operating mechanism frame at a fixed point and operable when released to cause opening of the contacts, a latch tip on said releasable member facing generally in a direction toward the end of the breaker at which the contacts are located, a first latch member and a second latch member both pivoted directly on said metal frame on which the releasable member is pivoted, said first latch member normally engaging the latch tip on the releasable member and said second latch member normally holding said first latch member, and electroresponsive means adjacent the end of the breaker opposite the contacts for releasing said latch members to effect opening of the contacts.

12. In a circuit breaker, relatively movable contacts adjacent one end of the breaker, operating mechanism for opening and closing said contacts, a trip bar, current responsive means for moving said trip bar, said current responsive means being positioned between the trip bar and the end of the breaker opposite from the contacts, two latch members both separate from said trip bar and both pivoted on the opposite side of the trip bar from the current responsive means, a releasable member normally engaged by the first of said pivoted latch members, the second of said pivoted latch members normally engaging the first pivoted latch member and holding it and the releasable member against movement, a portion on said trip bar biasing on and moving a portion on said second pivoted latch as the trip bar is moved by the current responsive means until the second pivoted latch clears the first pivoted latch to release it and the releasable member for movement.

13. In a multipole circuit breaker, a plurality of sets of relatively movable contacts adjacent one end of the breaker, an operating mechanism for opening and closing said contacts, a trip bar extending across the poles of the breaker, a plurality of bimetal elements for moving said trip bar gradually in accordance with the deflection of the bimetal element which has deflected the greatest amount, said plurality of bimetal elements being positioned between the trip bar and the end of the breaker opposite from the contacts, a latch member separate from said trip bar and pivoted on the opposite side of the separate trip bar from the bimetal elements, a portion on said trip bar engaging and moving said latch member gradually as the trip bar is moved, and means released when said latch member has been moved to a predetermined position for causing opening of said plurality of sets of contacts.

References Cited in the file of this patent

UNITED STATES PATENTS

1,912,109	Van Valkenburg et al.	May 30, 1933
2,044,133	Stolz et al.	June 16, 1936
2,050,285	Dorfman	Aug. 11, 1936
2,370,054	Lindstrom et al.	Feb. 20, 1945
2,419,125	Dorfman et al.	Apr. 15, 1947
2,455,753	Getchell	Dec. 7, 1948
2,608,629	Dorfman et al.	Aug. 29, 1952
2,666,828	Dyer et al.	Jan. 19, 1954
2,673,908	Brumfield	Mar. 30, 1954
2,703,351	Holbert	Mar. 1, 1955
2,795,670	Cellerini et al.	Jan. 11, 1957