Feb. 11, 1947. A. A. ARNHYM 2,415,621

FAN

Filed Oct. 20, 1944

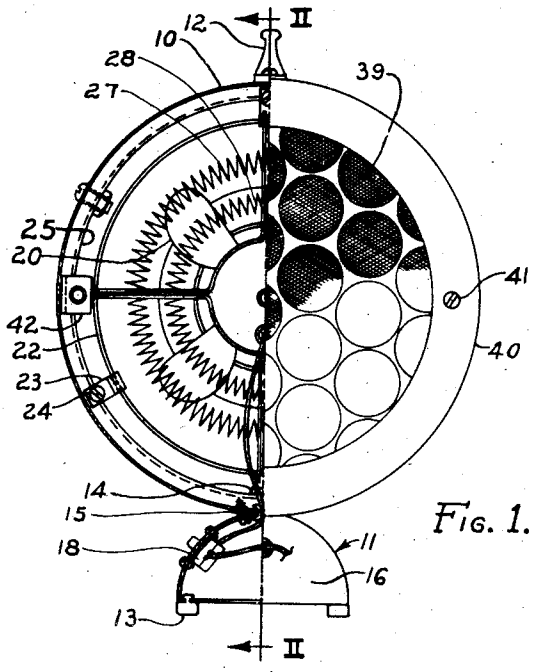

FIG. 1.

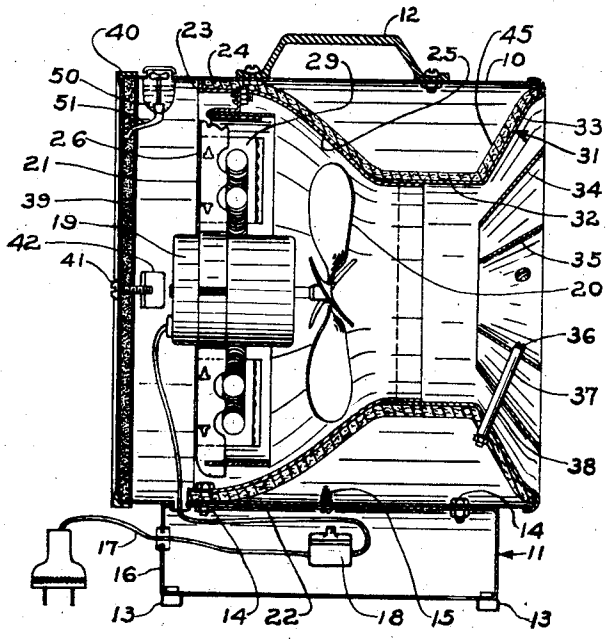

FIG. 2.

INVENTOR.
ALBERT A. ARNHYM
BY Ellwoodbury
ATTORNEY.

Patented Feb. 11, 1947 2,415,621

UNITED STATES PATENT OFFICE

2,415,621

FAN

Albert A. Arnhym, Los Angeles, Calif., assignor to Solar Aircraft Company, San Diego, Calif., a corporation of California

Application October 20, 1944, Serial No. 559,588

3 Claims. (Cl. 219—39)

1

This invention relates to small electric fans used primarily for circulating air to produce a cooling effect, although it may also be used to deliver heated air.

An object of the invention is to provide a gentle spreading stream of clean air of relatively uniform velocity over its entire cross-sectional area.

Another object is to provide a fan in which the moving blades are completely surrounded and protected.

Another object is to provide an enclosed fan that is efficient and is of simple and inexpensive construction.

Other objects and features of the invention will appear from the detailed description to follow of a specific embodiment thereof.

Briefly, the present invention consists of an electric fan of conventional construction mounted within a cylindrical or drum-shaped casing having an air filter in its rear end wall and an air distributor in its front wall, together with an inner shroud or transition for converging the air from the fan into the deflecting structure for facilitating the action of the latter in uniformly distributing the air.

In the drawing:

Fig. 1 is a rear view of a fan in accordance with the invention, with one half broken away to show the inner construction; and

Fig. 2 is a longitudinal vertical section taken in the plane II—II of Fig. 2.

The device comprises a cylindrical or drum-shaped casing 10 having a base 11 secured to the under side for supporting it and having a handle 12 secured to the top. The base 11 may be conveniently made in semi-cylindrical form with its flat face downward, this face being provided with feet 13 of rubber or the like so that the device can be set on a finished surface without marring it.

The base 11 may be secured to the casing 10 with bolts 14 and sheet metal screws 15. The base may also have a bushed opening in its rear end wall 16 for the passage of a power cord 17, and a switch 18 of conventional design may be mounted in the base with its handle extending through an aperture to the exterior. The cord 17 extends to the switch 18 and thence through a bushed opening in the contacting portions of the base 11 and casing 10 to the interior of the latter.

There is concentrically positioned within the casing 10 an electric motor 19 having a conventional fan 20 secured to its shaft at the front end of the motor. The motor casing is supported by a spider, this spider consisting of a central band

2

encircling the motor and four radiating spoke elements 21 which extend almost to the casing wall 10 where they are joined to a cylindrical supporting band 22. The band 22 in turn is secured by brackets 23 and bolts 24 to a transition member 25 which in turn is secured to the casing 10 in a manner later to be described.

The motor-supporting spider is formed in four sections, each section comprising a central quadrant adapted to lie against the cylindrical motor 19 and straight end sections, each of which is joined to one of the straight end sections of the next adjoining quadrant. The two pieces forming each leg or spoke of the spider may be secured together by tabs 26 cut out of one piece and pressed through the other piece and bent back. To join the outer end of each spoke to the cylindrical band 22, the spokes are provided with notches into which the band is pressed.

If it is desired that the device supply heated air, a pair of concentric heating coils 27 and 28 may be provided surrounding the motor 19. Each coil is in the form of an open helix and is supported by mica insulators 29 which are clamped between the two pieces forming each of the spoke members 21. The heating coils are adapted to be selectively energized by means of the switch 18 which is preferably a three-position switch having a neutral position in which the fan and coils are de-energized, a second position in which the fan is energized but the coils are not, and a third position in which both the fan and the coils are energized.

The transition member 25 is concentric with respect to the outer casing 10 but tapers from a large diameter at the rear end to a relatively small diameter in front of the fan. Thus the rear end of the transition is of the same diameter as the casing 10 and is secured directly thereto by the bolt 14 and additional circumferentially spaced bolts. As best shown in Fig. 2, the transition is only slightly larger in diameter than the fan 20 in the plane of the fan and is of somewhat smaller diameter than the fan at its forward end where it merges into and is joined to a member 31 having a cylindrical portion 32 which extends forwardly a short distance from the front wall of the transition member 25 and there merges into an outwardly flaring portion 33 which is curled back around the front edge of the casing 10 at its forward edge. There are positioned within the flared section 33 two concentrically disposed, generally conical baffles 34 and 35 which are supported from the member 33 by bolts 36 and spacer tubes 37 and 38.

The members 25 and 31 are preferably covered on the outside with a coating 45 of thermal and acoustic insulating material, such as felt to deaden the motor and fan sound.

The rear end of the casing 10 is closed by a filter element 39 which comprises inner and outer screen walls which contain therebetween a suitable oil impregnated porous material such as fiber glass capable of abstracting most of the dust from the air without excessively impeding the flow of air therethrough. A decorative retaining rim 40 may be provided for holding the filter wall in place, this rim being secured by screws 41 to brackets 42 which are welded or otherwise secured to the inner surface of the casing 10.

The structure described is capable of producing a very uniform and diverging stream of air so that it is particularly adapted for use on desks and the like in relatively close proximity to the person who is to benefit from it. The air not only has a gentle uniform motion, but is relatively clean because of the filtering effect of the porous rear wall of the casing.

The baffles 34 and 35 in conjunction with the member 31 function to recirculate air in front of the housing and mix it with the air delivered by the fan so that of the total air projected, about 70% comes through the fan and about 30% is recirculated. This makes it possible to heat the air passing through the housing to a higher temperature and deliver more total heat without discomfort.

The device is relatively silent because of the enclosure of the fan completely within the padded casing and because of the sound dampening effect of the rear filter wall.

The converging shroud or baffle 25 permits the use of a relatively large area filter at the rear and to reduce the resistance to the inflow of air while at the same time increasing the volumetric efficiency of the fan.

If desired, a reservoir 50 having a drip valve can be mounted in an aperture provided therefor in the housing, and connected by a tube 51 to the filtering material 39 for supplying an oil base perfume or deodorant to the air.

Various departures from the exact construction shown can be made while still utilizing the essential novel features of the invention, and the invention is to be limited only to the extent set forth in the appended claims.

I claim:

1. A device of the type described, comprising: a casing symmetrical about a longitudinal axis and including a rear section of large diameter at its rear end which converges to a substantially smaller diameter at its forward end; a front section continuous at its rear end with the front end of said rear section and flaring outwardly at its front end to a substantially larger diameter; auxiliary baffle means within said flaring portion of said front section; and an electric fan mounted within said rear casing section for propelling air forwardly therethrough, the rear end of said rear casing section and the front end of said front casing section being of the same diameter; and an outer cylindrical housing joined to the outer ends of said front and rear casing sections and forming an enclosure therefor.

2. A device of the type described, comprising: a casing symmetrical about a longitudinal axis and including a rear section of large diameter at its rear end which converges to a substantially smaller diameter at its forward end; a front section continuous at its rear end with the front end of said rear section and flaring outwardly at its front end to a substantially larger diameter; auxiliary baffle means within said flaring portion of said front section; an electric fan within said rear casing section for propelling air forwardly therethrough; means for mounting said motor in said casing comprising a spider having an inner annular portion engaging the casing of said electric fan and having an outer ring and radial struts interconnecting said inner and outer rings; means for connecting said outer ring to said rear casing section; a heating coil concentrically disposed about the motor of said fan in lateral spaced relation to said fan and said casing; and insulating supports secured to said radial struts for supporting said heating coil.

3. A device of the type described, comprising: a casing symmetrical about a longitudinal axis and including a rear section of large diameter at its rear end which converges to a substantially smaller diameter at its forward end; a front section continuous at its rear end with the front end of said rear section and flaring outwardly at its front end to a substantially larger diameter; auxiliary baffle means within said flaring portion of said front section; an electric fan mounted within said rear casing section for propelling air forwardly therethrough; acoustically damping filter means closing the rear end of said casing and a coating of acoustic insulating material on said front and rear casing section, the rear end of said rear casing section and the front end of said front casing section being of the same diameter; and an outer cylindrical housing joined to the outer ends of said front and rear casing sections and forming an enclosure therefor.

ALBERT A. ARNHYM.

REFERENCES CITED

The following references are of record in the file of this patent:

UNITED STATES PATENTS

Number	Name	Date
1,427,859	Schmidt	Sept. 5, 1922
1,487,828	Ziganek et al.	Mar. 25, 1924
1,713,648	Feinberg et al.	May 21, 1929
1,889,117	Adamcikas	Nov. 29, 1932
1,906,408	Pearsons	May 2, 1933
2,153,576	Kurth et al.	Apr. 11, 1939
2,258,731	Blumenthal	Oct. 14, 1941
2,268,801	Carlton	Jan. 6, 1942
2,298,576	McElroy et al.	Oct. 13, 1942
2,322,302	Martinson	June 22, 1943
1,869,012	Kunian et al.	July 26, 1932
2,149,689	Smith et al.	Mar. 7, 1939
1,942,758	Jessup	Jan. 9, 1934
2,175,758	Neubert	Oct. 10, 1939
1,993,158	Funk	Mar. 5, 1935
2,130,910	Smith, Jr.	Sept. 20, 1938
2,161,027	Dollinger	June 6, 1939
2,225,398	Hamblin	Dec. 17, 1940