A. D. FERRIS.

RECIPROCATING CHURNS.

No. 193,698. Patented July 31, 1877.

Fig. 1.

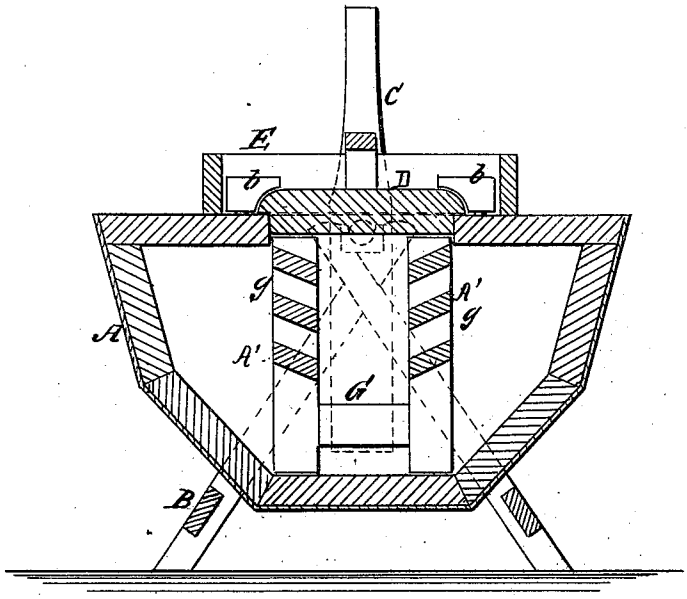

Fig. 2.

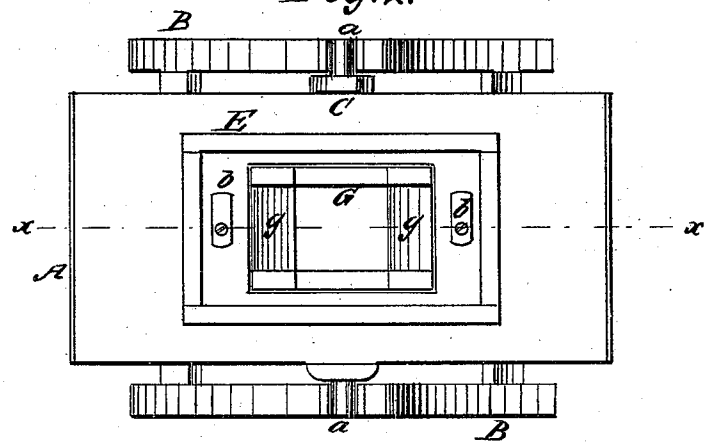

WITNESSES:

E. Wolff

J. H. Scarborough.

INVENTOR:

A. D. Ferris.

BY Munn & Co

ATTORNEYS.

N. PETERS, PHOTO-LITHOGRAPHER, WASHINGTON, D. C.

UNITED STATES PATENT OFFICE.

ALLEN D. FERRIS, OF BLAKELEY, MINNESOTA.

IMPROVEMENT IN RECIPROCATING CHURNS.

Specification forming part of Letters Patent No. **193,698**, dated July 31, 1877; application filed June 30, 1877.

To all whom it may concern:

Be it known that I, ALLEN D. FERRIS, of Blakeley, county of Scott, and State of Minnesota, have invented a new and Improved Churn, of which the following is a specification:

This invention relates to oscillating churns; and the nature of my invention consists in combining, with a semicircular cylindrical oscillating churn-box, a removable rectangular frame, having slats arranged in it in such manner that when the box is rocked rapidly the milk in it will be violently agitated, the currents being directed upward and downward by reason of the position of the dashers or slats, as will be hereinafter set forth.

In the annexed drawings, Figure 1 is a section taken vertically and longitudinally through the churn. Fig. 2 is a top view of the churn with the cover removed.

Similar letters of reference indicate corresponding parts in the two figures.

The letter A designates the churn-box, which is of the form shown in Fig. 1, and mounted in a cross-frame, B, by means of gudgeons *a a*. This box is provided with a handle, C, and a removable cover, D, which is surrounded by a raised inclosure, E, and held down tightly in its place by means of turn-buttons *b b*.

In practice I shall construct the box A of wood, with its angular bottom covered externally with sheet metal, preferably zinc.

Inside of this box, and centrally arranged therein, is a wooden rectangular frame, G, composed of vertical and horizontal bars and cross-slats *g*. This frame rests upon the central flat portion of the box A, and is held down firmly thereon by means of the cover D.

The drawing shows three slats, A′, on each side of the frame; but a greater or less number may be used. The slats on one side of the frame are inclined in an opposite direction to those on the other side of the frame, and the angle of inclination of the slats is such that the milk is directed both upward and downward by the same slats at each oscillation of the churn-box. The currents are thus opposed to each other, and a violent agitation is produced, which greatly shortens the operation of churning. The slats also serve to gather the butter when it comes.

When cover D is removed the frame G can be lifted out of the box and cleansed.

Having thus fully described my invention, I claim as new and desire to secure by Letters Patent—

In combination with the oscillating churn-box A, the removable frame G, slatted as described, and held down in place by means of the cover D and its fastenings, substantially as shown.

ALLEN D. FERRIS.

Witnesses:

F. J. WHITLOCK, Jr.,

GOWLD IRWIN.