D. B. BUBAR.

MAGAZINE RIFLE.

APPLICATION FILED APR. 7, 1914.

1,140,245.

Patented May 18, 1915.

3 SHEETS—SHEET 1.

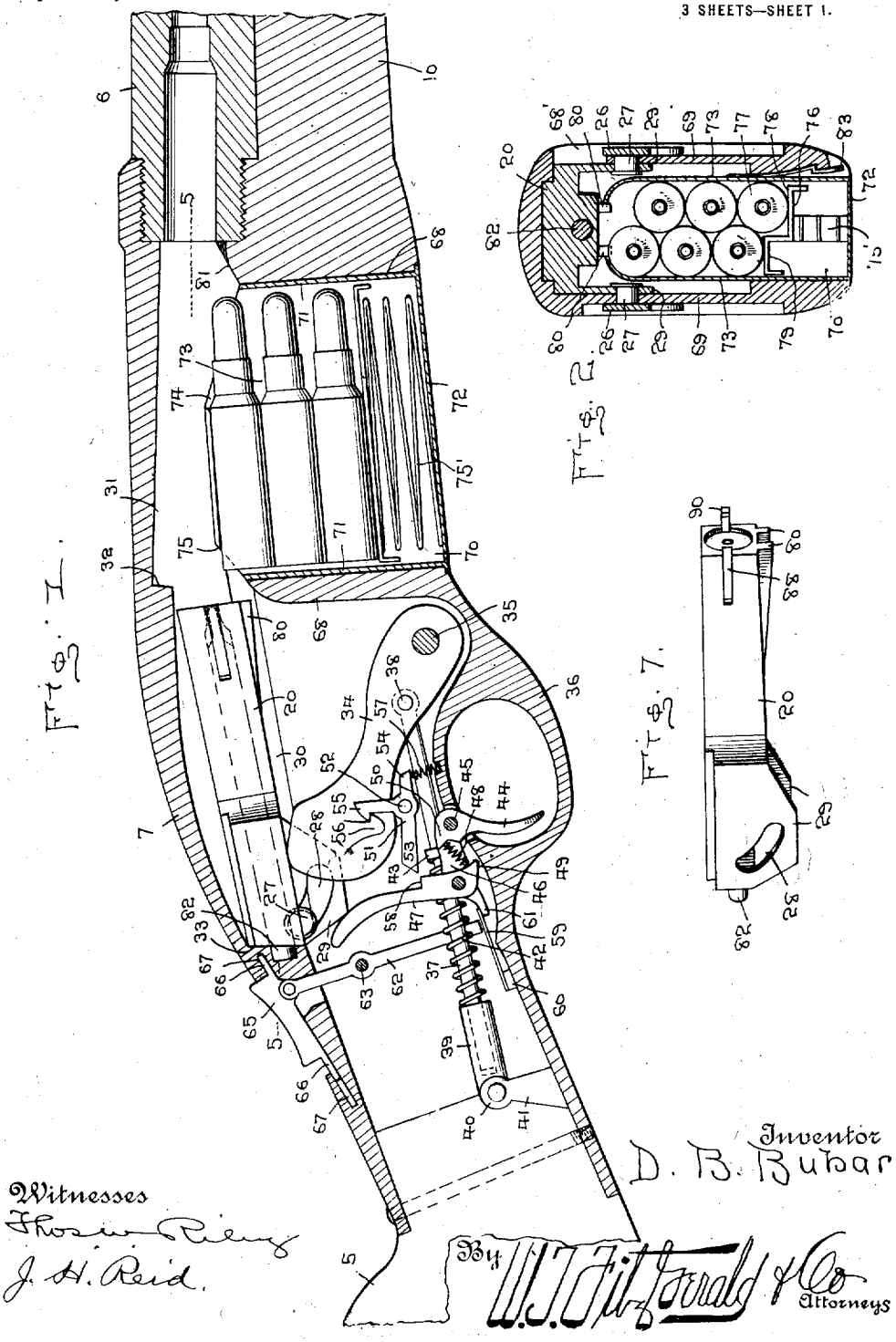

Fig. 1.

Fig. 2.

Fig. 7.

Witnesses

Thos. W. Riley

J. H. Reid.

Inventor

D. B. Bubar

By W. J. Fitzgerald & Co

Attorneys

D. B. BUBAR.

MAGAZINE RIFLE.

APPLICATION FILED APR. 7, 1914.

1,140,245.

Patented May 18, 1915.

3 SHEETS—SHEET 2.

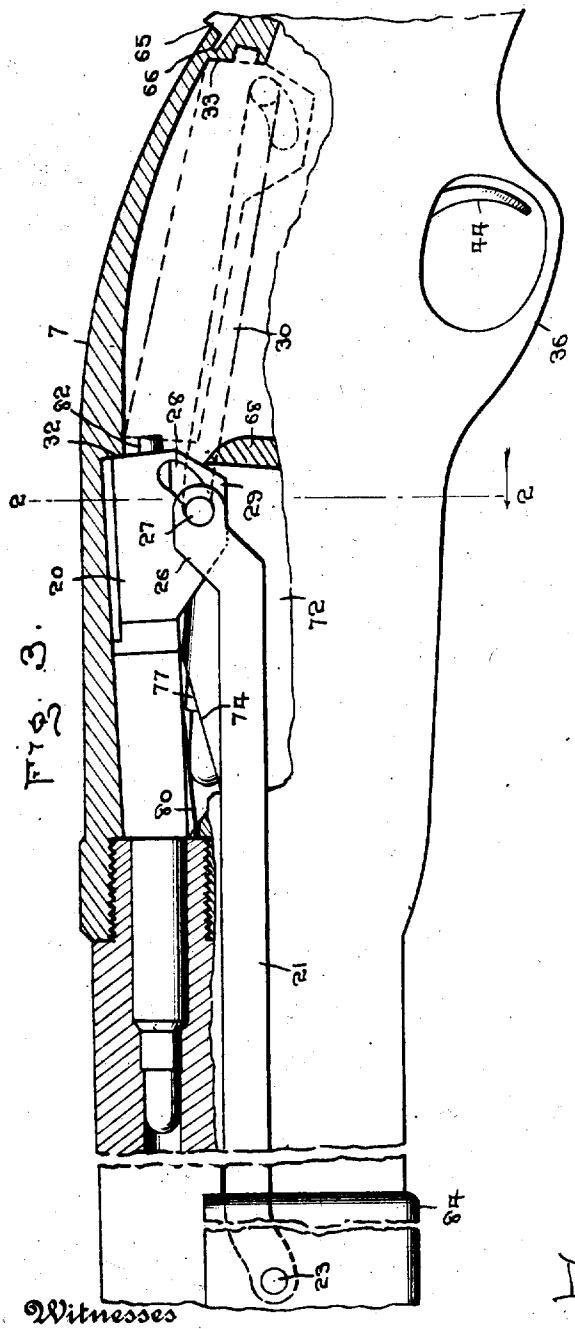

Fig. 3.

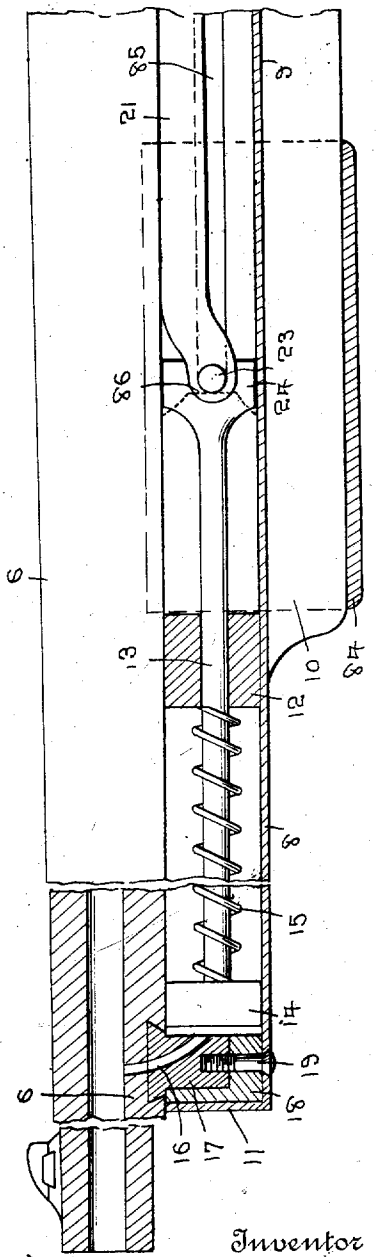

Fig. 4.

Witnesses

Thomas Riley

J. H. Reid.

Inventor

D. B. Bubar

By W. W. Fitzgerald & Co

Attorneys

D. B. BUBAR.

MAGAZINE RIFLE.

APPLICATION FILED APR. 7, 1914.

1,140,245.

Patented May 18, 1915.

3 SHEETS—SHEET 3.

Fig. 5.

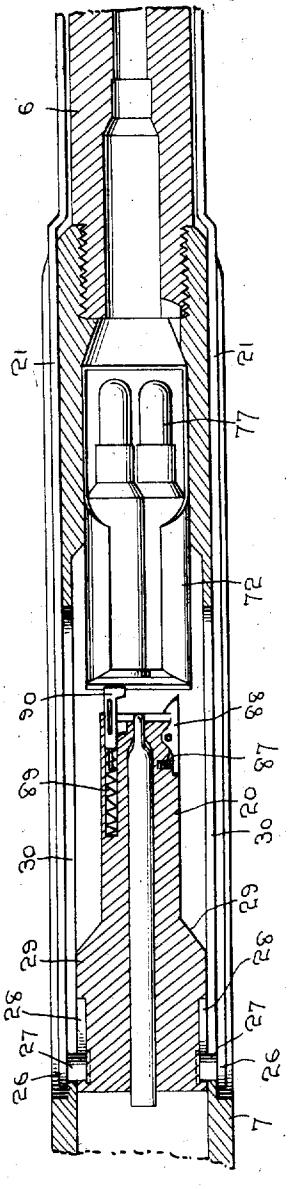

Fig. 6.

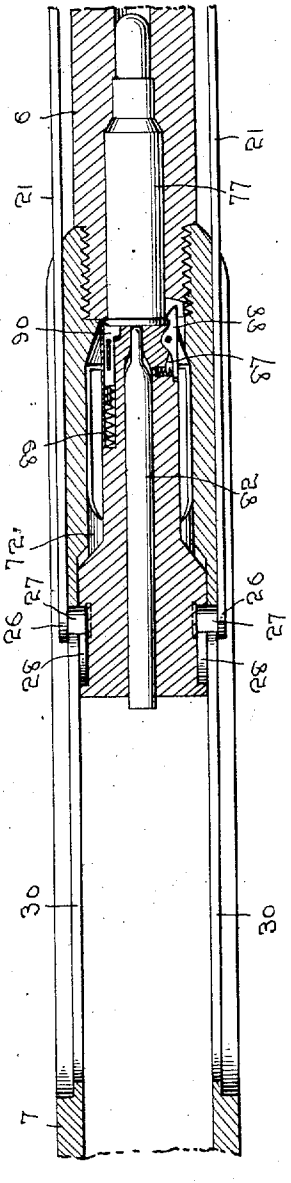

Witnesses

J. H. Reid.

Inventor

D. B. Bubar

By W. J. Fitzgerald & Co

Attorneys

UNITED STATES PATENT OFFICE.

DEAN BRABSON BUBAR, OF ROSEBURG, OREGON.

MAGAZINE-RIFLE.

1,140,245. Specification of Letters Patent. Patented May 18, 1915.

Application filed April 7, 1914. Serial No. 830,174.

To all whom it may concern:

Be it known that I, DEAN BRABSON BUBAR, a citizen of the United States, residing at Roseburg, in the county of Douglas and State of Oregon, have invented certain new and useful Improvements in Magazine-Rifles; and I do hereby declare the following to be a full, clear, and exact description of the invention, such as will enable others skilled in the art to which it appertains to make and use the same.

This invention relates to fire arms, and more particularly to improvements in gas operated automatic rifles.

One of the principal objects of the invention is the provision of a fire arm, which utilizes a portion of the gases generated in firing, for operating the breech block of the gun, in automatically unloading and loading the same.

Another object of the invention is the provision of novel and improved means of operating the breech block for unlocking and locking the same.

A further object of the invention contemplates an improved construction, arrangement, and operation of the hammer, sear and trigger.

A still further object of the invention is the provision of a fire arm of the class described which embodies features of general improvement, and which is simple, durable, efficient in operation and comparatively inexpensive to manufacture.

With these and other objects in view which will become apparent as the description proceeds, the invention resides in the construction, combination and arrangement of parts hereinafter more fully described and claimed, and illustrated in the accompanying drawings, in which like characters of reference indicate like parts throughout the several figures, of which,

Figure 1 represents a vertical, longitudinal sectional view taken through the breech of a rifle constructed according to my invention, looking from the right hand side thereof. Fig. 2 represents a vertical transverse sectional view on the line 2—2, Fig. 3. Fig. 3 represents a vertical, longitudinal, sectional view taken through the breech of a rifle looking at the same from the left hand side thereof. Fig. 4 represents a side elevational view of the muzzle of the rifle, portions thereof being shown in section. Fig. 5 represents a horizontal sectional view on the line 5—5, Fig. 1 with breech block rearward. Fig. 6 represents a horizontal similar view with breech block advanced. Fig. 7 is a perspective view of the breech block showing the arcuate slot and the extractor and ejector.

Referring more particularly to the drawings 5 represents the stock, 6 the barrel and 7 the breech casing of the rifle. A hollow tube 8 is secured below the barrel 6 of the rifle in a recess 9 formed in the upper edge of the forward extension 10 of the breech casing, which tube extends from a point forwardly of the center of the barrel to the rear end thereof, and said tube is closed at its forward end 11 and is provided with a partition 12 in spaced relation to the closed forward end, in which partition is guided a plunger rod 13, provided at its front end with a piston 14 adapted to be held normally toward the forward end of the tube by means of a spring 15 interposed on the plunger rod between partition 12 and piston 14, and said piston is adapted to be forced rearwardly by the expanding gases formed at the moment of firing, said gases having entrance to the tube through a port 16 which extends through the underwall of barrel 6 and through a block 17 dovetailed into said underwall and supported by means of a second block 18, a screw 19 extending through the bottom wall of tube 8 through block 18 and into block 17 for securing the latter in place.

It will be understood of course that piston 14 will not be operated until the bullet has passed port 16, but having passed said port, the expanding gases will enter through the port into the forward end of the tube and abut against piston 14, forcing the latter rearwardly by the expansion of the gases. This rearward movement of plunger rod 13 will operate to unseat breech block 20, through the medium of the link 21, pivoted as at 23 to the enlarged rear end 24 of plunger rod 13, and being offset upwardly at its rear end as at 26, said offset 26 provided with a pin 27 extending on one side

thereof, and passing through a slot 30 formed in the wall of the breech casing 7 and engaging an arcuate slot 28 formed in a depending lug 29 on breech block 20 and it is to be understood that the link, offset, lug, pin and slots are duplicated at the right side of the gun for equalizing the force exerted upon the breech block 20 for preventing any binding action thereof. The breech block is substantially of a rectangular formation, and when in locked position rests in a recess 31, formed in the upper wall of the breech casing rearwardly of barrel 6, and abuts at its rear end against a substantially square shoulder 32 formed on the upper wall of the casing, and rests in a slightly inclined position as shown in Fig. 3.

Upon rearward movement of plunger 13 and links 21, the pins 27 by engaging the rear walls of slots 28 and at the same time being guided by slots 30, will force the rear end of the breech block downwardly out of engagement with shoulder 32, so that the block is forced rearwardly into the position shown in dotted lines in Fig. 3 and full lines in Fig. 1, in which position the block abuts against a second shoulder 33 formed in the breech casing. After the breech block has reached this position and the bullet having left the muzzle of the rifle, spring 15 expands and draws plunger 13, and links 21 forwardly, and with them the block the latter being forced upwardly into locked position as it reaches the forward end of its movement by reason of pins 27 contacting with the forward face of the slots 28, as will be readily understood.

A hammer 34 is pivoted at its lower end on a pin 35 extending between the side walls of casing 7 forwardly of trigger guard 36, and a rod 37, is pivoted at its forward end as at 38 to said hammer, and extends at its rear end into a tubular guide 39 pivoted as at 40 on a lug 41 set into the front edge of stock 5, and a coiled spring 42 is interposed on rod 37 between said guide and a collar 43 secured on the rod, said spring tending to normally force the hammer forward. A trigger 44, is pivoted as at 45 and is provided with a rearwardly extending arm 46 on which is pivoted the lower end of a lever 47, a spring 48 which tends to normally hold the upper end of said lever in a forward position being interposed between a toe 49, on the lower end of said lever and a shoulder 50 formed on the trigger near the pivot point 45 thereof. A three armed sear 51, is pivoted as at 52 between the side walls of the casing, and is provided with a rearwardly extending, forwardly extending, and upwardly extending arm 53, 54 and 55 respectively, arm 55 being provided with a tooth adapted to engage a toothed lug 56 formed on the upper end of hammer 34 when said hammer is forced rearwardly, said arm 55 being held normally in a rearward position by means of a spring 57 interposed between the forward end of arm 54 and the bottom of the casing, and the rear end of arm 53 is adapted to be engaged by a shoulder 58 on lever 47 when the breech block moves rearwardly, it being understood that as the block moves rearwardly the hammer is engaged thereby and forced downwardly, at the same time, the curved upper end of lever 47 being engaged by the lug 29 for throwing shoulder 58 out of engagement with arm 53 of the sear, and allowing arm 55 thereof to engage the tooth 56 on the hammer 34 as the latter is forced downwardly. As the breech block moves forwardly shoulder 58 is engaged under arm 53, and the hammer is held in cocked position by the engagement of tooth 56 with the tooth on arm 55 of the sear, and a pull on trigger 44 will raise the arm 46 on said trigger and with it lever 47, thereby disengaging arm 55 from tooth 56, and allowing the hammer to swing forwardly by the action of spring 42. Arm 46 of trigger 44 is normally held in lowered position by means of a leaf spring 59, which is secured at its rear end to a block 60, on the bottom wall of the casing, and which bears at its forward end on the rearwardly projecting toe 61 extending from arm 46.

I have provided a safety lock, which comprises a lever 62 pivoted intermediate its ends as at 63, and which projects at its upper end through a slot 64 formed in the upper wall of the breech casing rearwardly of the shoulder 33 thereon, the upper end of the lever being pivoted on a sliding thumb latch 65 provided at opposite ends with flanges 66 to engage in recesses 67 formed in the casing, the lower end of lever 62 terminating in juxtaposition to toe 61 of the trigger, to one side of spring 59, and is adapted when latch 65 is moved rearwardly from the position shown in Fig. 1 to engage over said toe to prevent the trigger from being pulled. The breech casing is provided with a well, of which partitions 68 and 69 form the walls, and this well is adapted to receive the magazine 70 which is substantially rectangular, and which is formed of end walls 71, a bottom 72 and side walls 73, the latter at their upper edges being curved inwardly toward each other, and being cut away forwardly and rearwardly as at 74 and 75 respectively, and a spring 75′ actuates follower 76 contained within the magazine, and is adapted to normally force the cartridges 77 upwardly, the said cartridges being arranged in staggered relation, and occurring in two vertical series one of which series is supported by one of the steps 78 and the other by the step 79, which steps form the follower 76. When the magazine is in place, the top-

most cartridge is in line with a tongue 80 formed on the lower surface of the breech block, which tongue is equal in width to the distance between the upper edges of the side wall 73 of the magazine, so that as the breech block moves forwardly the cartridge is engaged by the tongue and is raised forwardly over a beveled surface 81 of the breech casing into the rear end of the barrel, in position for being exploded by the firing pin 82, as the latter is struck by hammer 34. As the breech block moves rearwardly the cartridge is ejected through the opening 68′, and another cartridge is forced into position to be engaged by the block as it again moves forwardly.

The lugs 29 on the breech block 20 extend downwardly from each side thereof, and are engaged when the block is in forward position, between the partitions 68 and 69 and the adjacent side wall of the casing, and the breech block bears at its sides against the opposite side walls of the casing at the upper portions thereof. The magazine is provided with a spring keeper or latch 83 adapted to engage in a recess formed in one wall of the well in which the magazine is positioned.

For operating the breech block by hand, I have provided a block 84, positioned slidably on the forward extension 10 of the breech casing, and the pin 23 which connects plunger rod 13 and links 21, extends through slots 85 in the tube 8, and into block 84, the pin 23 being normally held against the shoulders 86 formed upon the inner wall of block 84 by the spring 15, so when plunger rod 13, pin 23 and links 21 are driven rearwardly by the pressure of gas, the same are capable of rearward movement independent of block 84, while if block 84 is forced rearwardly by hand, shoulder 86 engages the ends of pin 23 and forces the pin 23 and links 21 rearwardly so that the rifle may be used as a hand operated arm if so desired.

For extracting and ejecting the cartridges or shells I provide the breech block 20 with the recess 87 in which is pivotally mounted the spring actuated extractor 88 at the right of the firing pin 82, and at the left side of the firing pin 82, is provided the bore 89 in which is slidably mounted the spring actuated ejector 90 for casting the shells outwardly through the opening 68′ formed in the side of the breech casing 7 after the shells have been withdrawn from the barrel by the extractor 88.

Although I have described the preferred embodiment of my invention, I may desire to make such changes in the construction, combination and arrangement of parts as do not depart from the spirit of the invention and scope of the appended claims.

Having thus fully described my invention what I claim as new and desire to secure by Letters Patent, is:

1. A magazine rifle, comprising a gun having a barrel with a beveled recess across the under portion of same with a gas passage leading from the rifle bore to said recess and having a breech block casing connected to the rear end of the barrel with a breech block reciprocating therein, a block having beveled sides inserted in said recess, said block having a bore adapted to register with the gas passage of said recesses when said block is properly mounted and leading to one side of said block, a second block arranged upon said first block, a tube mounted in said casing having a closed outer end seated over said blocks with means arranged therein to fasten said tube to both of said blocks so that said bore in said first mentioned block will communicate with said tube, and devices mounted in said tube and connected to said breech block adapted to automatically return to normal position after said devices have been actuated by the exploded gases of said gun passing into said tube through said gas passage and said bore in said first mentioned block.

2. A magazine rifle, comprising a gun having a barrel with a breech block casing attached thereto, a breech block reciprocatingly mounted in said casing, a hammer pivoted in the lower part of said casing having means to throw said hammer within the path of said breech block, said breech block lowering said hammer upon the rearward reciprocation thereof, a triple-armed sear pivoted in said casing, one of said arms adapted to latch said hammer into lowered position, the second of said arms coacting with a spring to retain said first mentioned arm in latching position, a trigger pivoted in said casing having a lugged arm, a lever pivoted upon said arm and coöperating with the third arm of said sear to unlatch said first mentioned arm to release said hammer, said lever having a spring mounted between the lug on said trigger arm and the end of said lever adapted to engage said lever with said third arm of said sear.

3. A magazine rifle, comprising a gun having a breech block casing with a breech block reciprocatingly mounted therein, a hammer pivoted therein adapted to be lowered by said breech block, pivoted means mounted in said casing adapted to lock said hammer into lowered position, a trigger pivoted in said casing having an arm thereto with a pivoted lever arranged thereupon adapted to unlock said hammer locking means, and means pivoted in said casing, adapted at one end to engage said trigger arm to prevent the operation of said trigger, and at the opposite end pivotally connected with a

thumb latch adapted to move said pivoted means into or out of engagement with said trigger arm, said thumb latch having oppositely disposed flanges adapted to slidingly seat in suitable recesses in said casing to retain said thumb latch in position.

In testimony whereof I have signed my name to this specification in the presence of two subscribing witnesses.

DEAN BRABSON BUBAR.

Witnesses:
GEORGE W. YOUNG,
ROY O. YOUNG.