No. 639,649. Patented Dec. 19, 1899.

J. A. & W. K. BAKER.

REFUSE DESTRUCTOR, &c.

(Application filed July 25, 1899.)

(No Model.) 4 Sheets—Sheet 1.

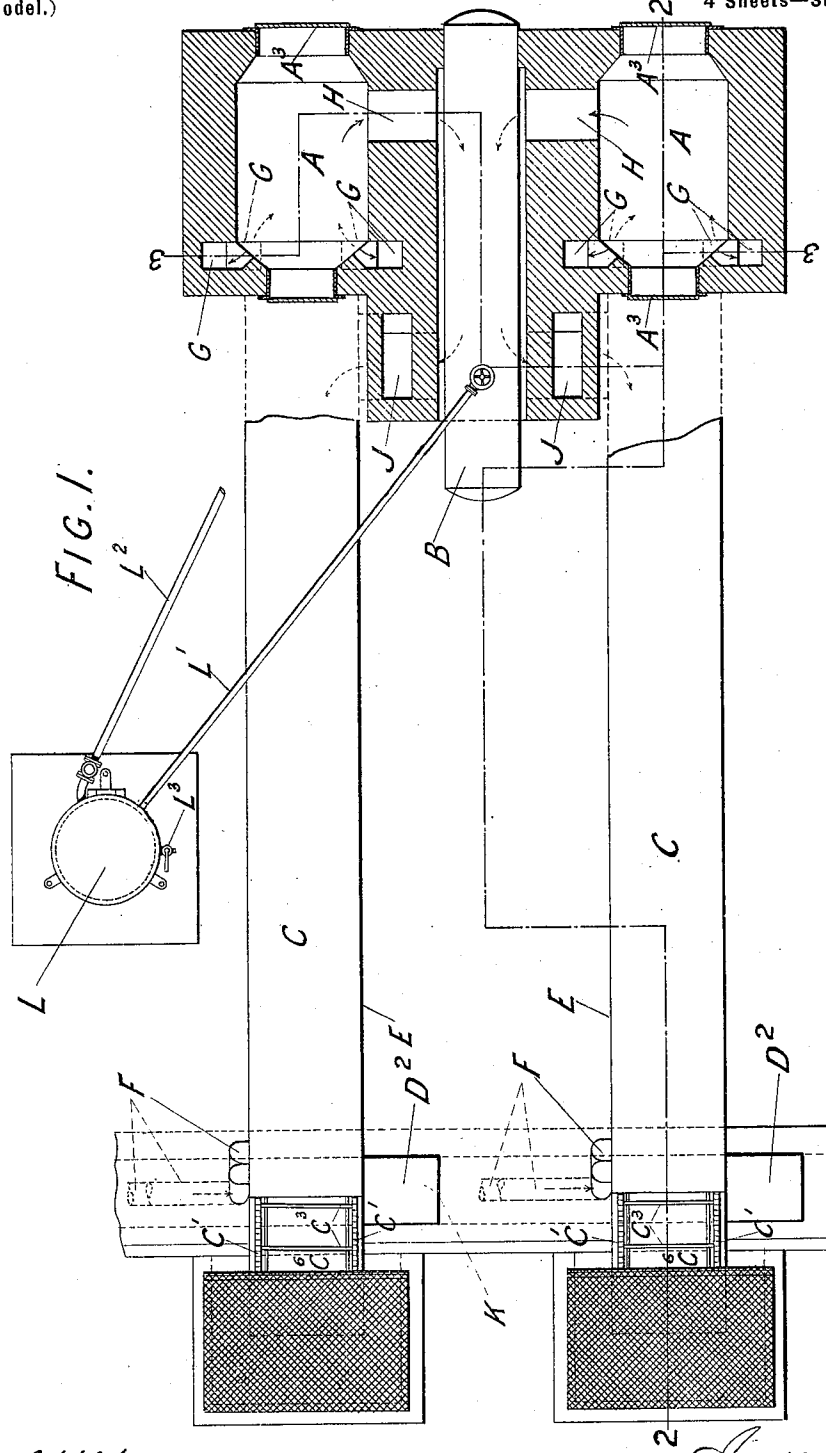

FIG. 1.

Witnesses
A. E. Boulter

Inventors
Joseph A. Baker
Wm. K. Baker
By Wm. E. Boulter, attorney

THE NORRIS PETERS CO., PHOTO-LITHO., WASHINGTON, D. C.

No. 639,649. Patented Dec. 19, 1899.

J. A. & W. K. BAKER.

REFUSE DESTRUCTOR, &c.

(Application filed July 25, 1899.)

(No Model.) 4 Sheets—Sheet 2.

FIG. 2.

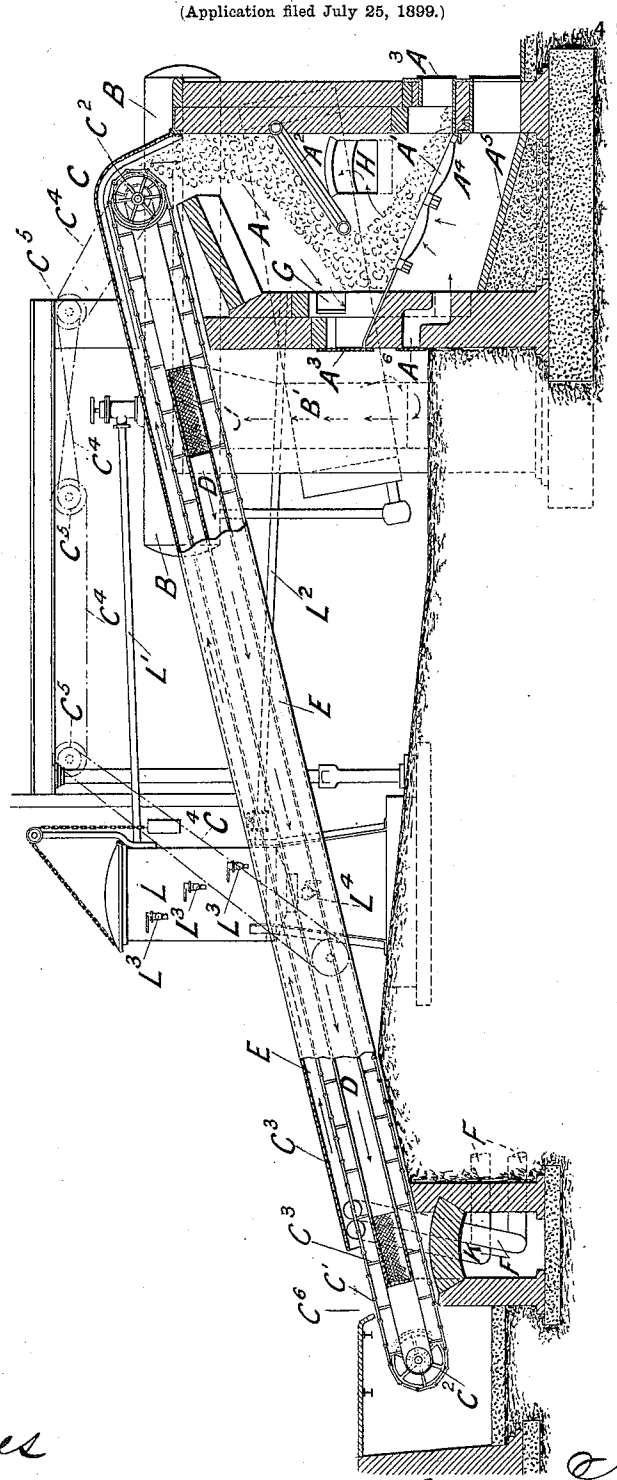

Witnesses
A. E. Boulter
[illegible]

Inventors
Joseph A. Baker
Wm. K. Baker
By Wm. E. Boulter Attorney

THE NORRIS PETERS CO., PHOTO-LITHO., WASHINGTON, D. C.

No. 639,649. Patented Dec. 19, 1899.

J. A. & W. K. BAKER.

REFUSE DESTRUCTOR, &c.

(Application filed July 25, 1899.)

(No Model.) 4 Sheets—Sheet 3.

FIG. 3.

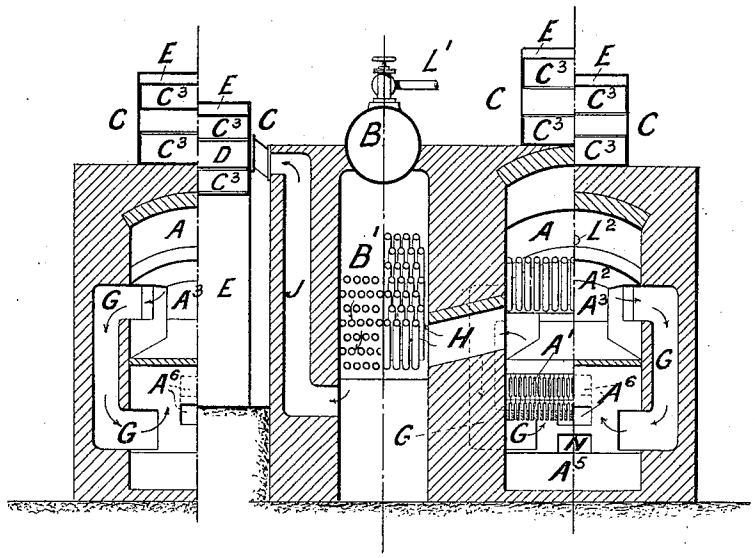

Witnesses

H. K. Boulter

C. Monthuy

Inventors:

Joseph A. Baker

William K. Baker.

By Wm. E. Boulter, attorney

THE NORRIS PETERS CO., PHOTO-LITHO., WASHINGTON, D. C.

No. 639,649. Patented Dec. 19, 1899.

J. A. & W. K. BAKER.

REFUSE DESTRUCTOR, &c.

(Application filed July 25, 1899.)

(No Model.) 4 Sheets—Sheet 4.

FIG. 4.

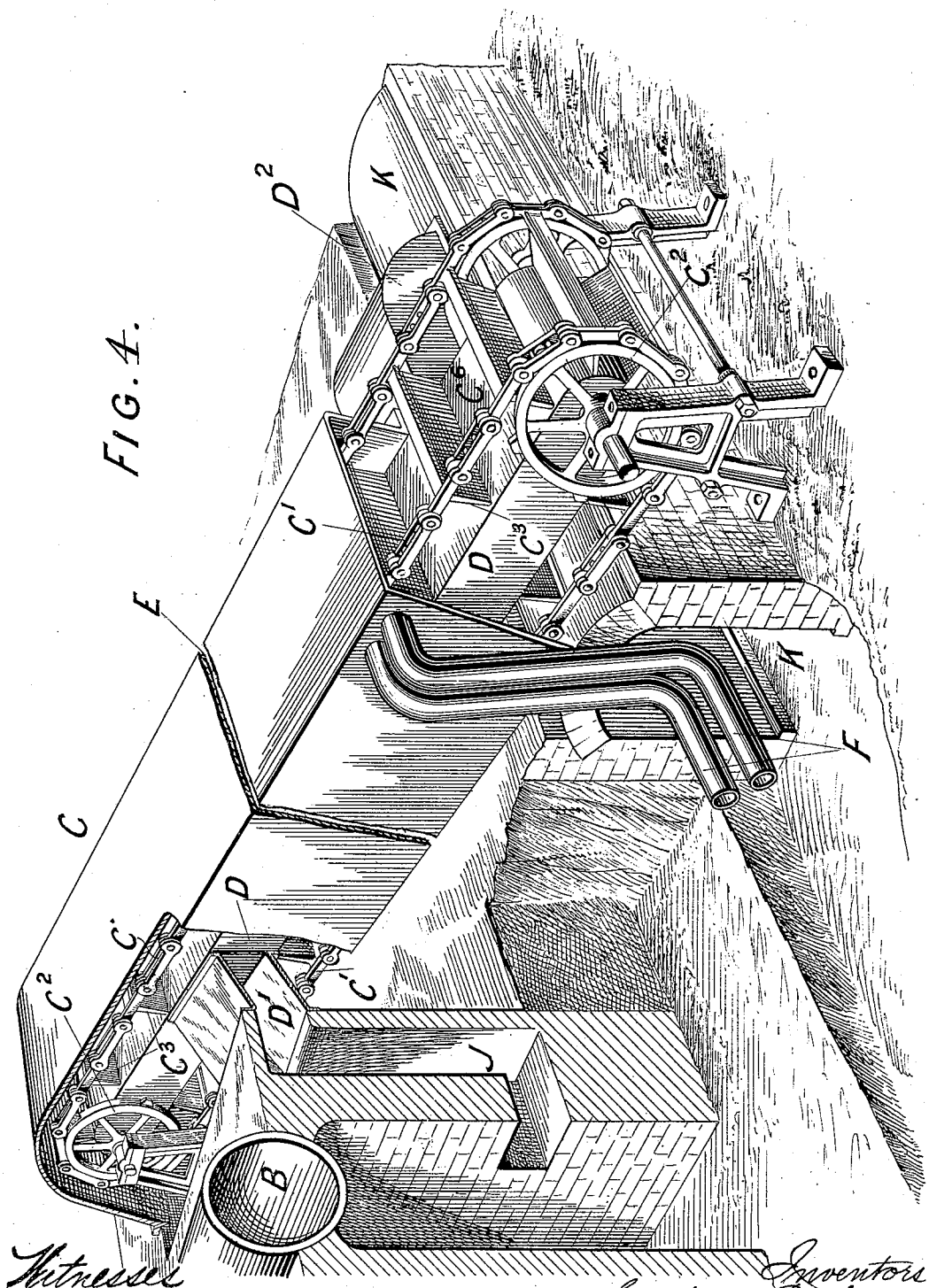

Witnesses
A. E. Boulter
[illegible]

Inventors
Joseph A. Baker
Wm K Baker
By Wm E Boulter, attorney

THE NORRIS PETERS CO., PHOTO-LITHO., WASHINGTON, D. C.

UNITED STATES PATENT OFFICE.

JOSEPH ALLEN BAKER AND WILLIAM KING BAKER, OF LONDON, ENGLAND.

REFUSE-DESTRUCTOR, &c.

SPECIFICATION forming part of Letters Patent No. 639,649, dated December 19, 1899.

Application filed July 25, 1899. Serial No. 725,057. (No model.)

To all whom it may concern:

Be it known that we, JOSEPH ALLEN BAKER and WILLIAM KING BAKER, subjects of the Queen of England, residing at London, England, have invented certain new and useful Improvements in or Relating to Refuse-Destructors and the Like, (for which application for Letters Patent in Great Britain has been made, No. 21,688, dated October 14, 1898,) of which the following is a specification.

This invention relates to refuse-destructors and the like of the type in which the draft passes over a large area of hot refuse, some of which is supported on a grate or grates. Hitherto difficulty has been experienced in working such destructors because of the tendency of certain sorts of refuse to become compacted upon the grates under the action of the draft, which thus became impeded, and also because of the reluctance of the material in certain states thereof to pass with the desired freedom along its proper path in the destructor from one grate to the one next beneath it.

The object of the present invention is to improve the construction of such destructors, so as to obviate the disadvantages above referred to.

We may combine with the improved destructor, when desirable, a device for completely digesting animal matter or for reducing and cremating the same.

According to this invention, while the draft follows the same general course as in former types it is now diverted just before it arrives at the end of its path and led upward through the incandescent layer on the last of the series of grates before being allowed to pass out of the destructor. By thus diverting the draft it has a tendency to lift up and open the layer of fuel on the last grate, neutralizing the tendency of the same to clog and making the draft easier. Moreover, it is an incidental advantage of this arrangement that any foul gases in the draft-current are delivered into the incandescent fuel and destroyed.

Another important feature of this invention is the employment of a specially-arranged drier and elevator for drying the refuse and delivering it to the grate on which it is burned. This elevator is arranged in an inclined passage, up which the air-draft flows to the furnace and up which also the elevator conveys the refuse, which in its passage is heated by a flue through which hot waste gases from the grates pass. Preferably the flue is contained within the elevator or otherwise so arranged that the elevator blades or buckets convey the refuse along its upper surface. The blast of fresh air flowing up the passage mingles with the gases of decomposition arising from the drying refuse, thereby producing with them a combustible gaseous mixture containing a considerable proportion of oxygen.

The sterilizing, reducing, and cremating apparatus aforesaid may be arranged as follows: A process-tank in proximity to the destructor receives the material to be treated. It is therein submitted to the sterilizing action of direct steam under pressure derived from the destructor-boiler. If the residue is not to be utilized industrially, the process of reduction is continued until the fatty, glutinous, gelatinous, and other products of a nature fluid under heat are separated, when they are expelled by steam-pressure derived from the same source direct to the destructor-furnace. In the complete process the solid matter is now passed direct to a special cremator, where it is submitted to the direct or indirect action of fire.

In the accompanying drawings, which illustrate, diagrammatically, portions of one construction of refuse-destructor according to this invention, Figure 1 is a plan, partly in section. Fig. 2 is a longitudinal vertical section on the line 2 2 of Fig. 1. Fig. 3 is a transverse vertical section on the line 3 3 of Fig. 1. Fig. 4 is a perspective view showing some details drawn to a larger scale.

Like letters indicate like parts throughout the accompanying drawings.

A are furnaces each having an inclined grate A′, where the refuse is burned, and a grate or other baffle A^2, over which the material passes on its way to the grate A′. Doors A^3 are provided in order that the refuse upon the grate A′ may be raked from either end, and the floor A^5 of the ash-pit A^4 is inclined at an angle to facilitate the removal of the ashes. The gases from the furnaces pass, as hereinafter described, to a tubular boiler B, and it is found convenient to heat one boiler with the gases from two furnaces.

The refuse to be burned is conveyed to the furnaces A by drying-elevators C and is delivered by them onto the grates A^2. Each elevator C comprises belts, chains, or equivalents C′, passing over pulleys C^2 and having blades C^3 suspended at intervals between the belts or chains C′. The elevators are driven in any convenient way—as, for example, by the belts and pulleys C^4 C^5—from a small engine suppled with steam from the main boiler. The refuse is delivered onto the elevators, as at C^6, and the blades C^3 cause it to pass up over the surface of the flue D, down which the gases pass on their way from the boiler B. Each drying-elevator C operates in a tunnel or passage E, and the material passing over the flue D is dried and gives off gases into the passage E. The air supplied to the furnaces passes up this passage E, and thus mixes with the gases given off by the drying refuse, renders them combustible, and carries them to the furnace, where they are burned.

The course taken by the air and gases in this destructor is as follows: The air enters through pipes F, whence it passes up through the passage E over the material in the elevator C, mixing with the gases given off by the refuse in the elevator. The air mixes with the gases and then passes down over the refuse upon the grate A^2 in the furnace A. Thence it passes out through a flue G in the furnace-wall into the ash-pit A^4, up through the grate A′ and the layer of incandescent material upon it, and through a flue H to the space surrounding the tubes B′ of the boiler B. Having passed around these tubes, the gases proceed through flues J and D′ to the internal flue D of the drying-elevator C, whence they pass out through a flue D^2 to an underground flue K, leading to a fan or chimney. The pipes F, through which the incoming air is drawn, are preferably placed in this underground flue K in order that the air may be heated before entering the passage E. An auxiliary inlet is provided, as at A^6, in order that, if desired, air may be admitted straight to the under side of the grate A′ in addition to or instead of the mixture of air and gases coming through the flue G. This inlet A^6, in common with all the various flues herein described, may be controlled as desired by dampers or similar devices for regulating the passage of the gases.

L is a process-tank or digester having a connection L′ with the steam-drum of the boiler B and another connection L^2, which enters the furnace A above the grate A′. Steam entering by the connection L′ sterilizes and reduces any material which may be placed in the digester L, and the semisolid contents of the latter are expelled, if desired, through the pipe L^2 and pass into the furnace A, while any fluid is drawn off by the cock L^4 at the bottom of the digester. Valves or cocks are provided, as at L^3, in order that the contents of the digester at various elevations may be run off separately, if desired.

Cremators are provided in which the solid matter from the digester or objectionable material—such as animal-carcases, &c.—is destroyed.

Throughout the accompanying drawings the course of the gases is indicated by small arrows.

It is obvious that various alterations may be made in the design and arrangement of the various parts comprised in the refuse-destructor above described without departing from the spirit of this invention. For instance, more than two furnaces may be arranged to serve one boiler with hot gases, or only one furnace may be coupled to each boiler. Again, the number of cremators and digesters will naturally vary according to the general character of the refuse which has to be dealt with.

We claim—

1. In a refuse-destructor, the combination of a furnace, a grate within the furnace upon which the refuse is burned, a baffle situated above the grate, a casing E, a conduit connecting the casing with the furnace above the baffle, a flue D within the casing, a mechanical conveyer in the casing operating to convey the refuse along the top surface of the flue, an air-inlet in the casing, a boiler, a flue H connecting the furnace with the space surrounding the tubes of the boiler, a flue J connecting such space with the flue D in the casing, and a flue G leading from the space in the furnace above the grate to the ash-pit, substantially as set forth.

2. In a refuse-destructor, the combination of a furnace, a grate within the furnace upon which the refuse is burned, a baffle situated above the grate, a casing E, a conduit connecting the casing with the furnace above the baffle, a flue D within the casing, a mechanical conveyer in the casing operating to convey the refuse along the top surface of the flue, an air-inlet in the casing, a flue leading from the space above the grate to the ash-pit, and a conduit connecting the furnace with the flue D in the casing, substantially as set forth.

In testimony whereof we have hereto set our hands in the presence of the two subscribing witnesses.

JOSEPH ALLEN BAKER.
WILLIAM KING BAKER.

Witnesses:
T. J. OSMAN,
WALTER J. SKERTEN.