Dec. 3, 1929. J. E. JOHNSON 1,737,721

PRINTING MACHINE

Original Filed Feb. 8, 1923 13 Sheets-Sheet 1

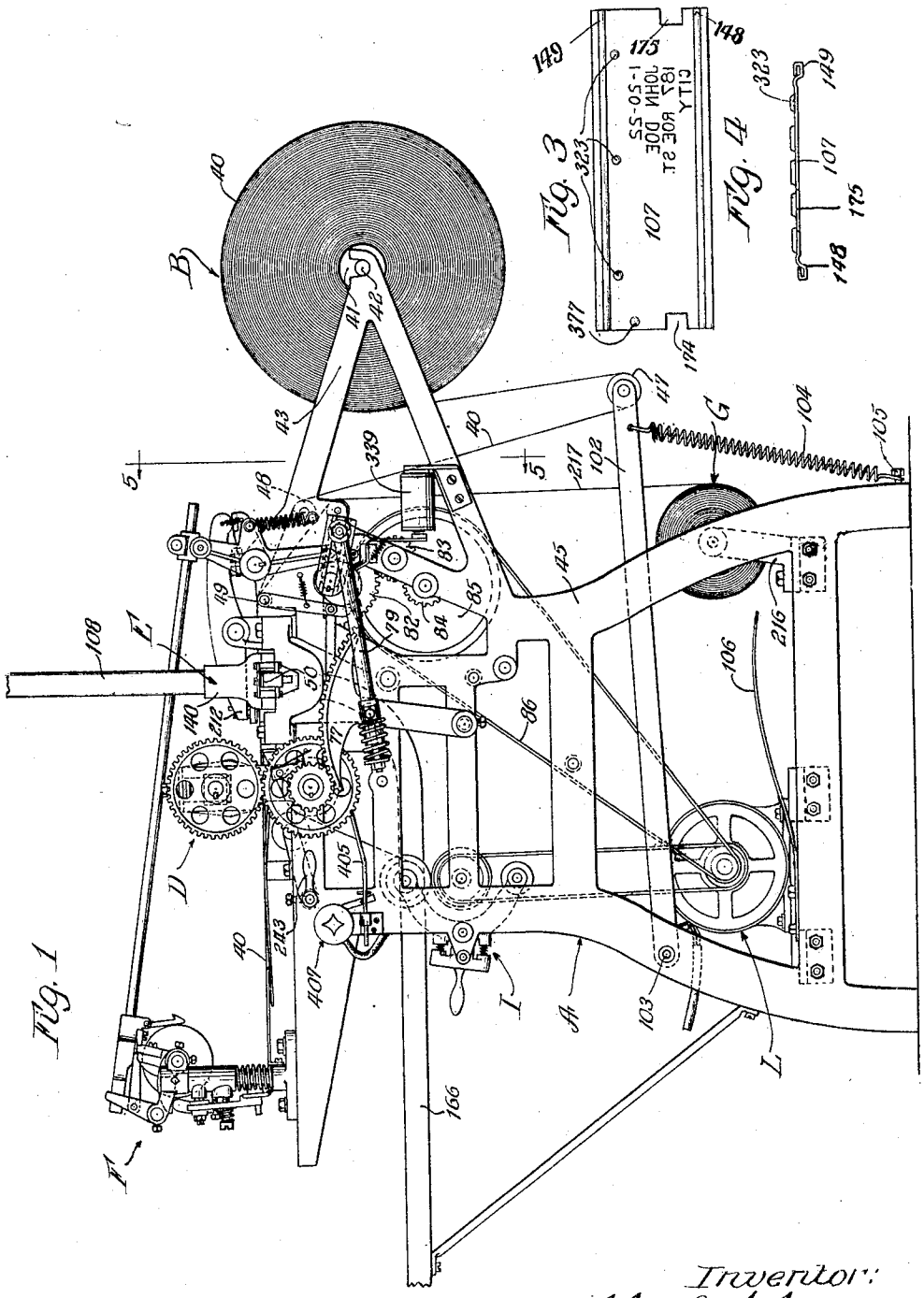

Fig. 1

Fig. 3

Fig. 4

Witness:
P. S. Haselton

Inventor:
John E. Johnson

By: Jones, Addington, Ames, & Seibold
Attys.

Dec. 3, 1929. J. E. JOHNSON 1,737,721

PRINTING MACHINE

Original Filed Feb. 8, 1923 13 Sheets-Sheet 2

Fig. 2

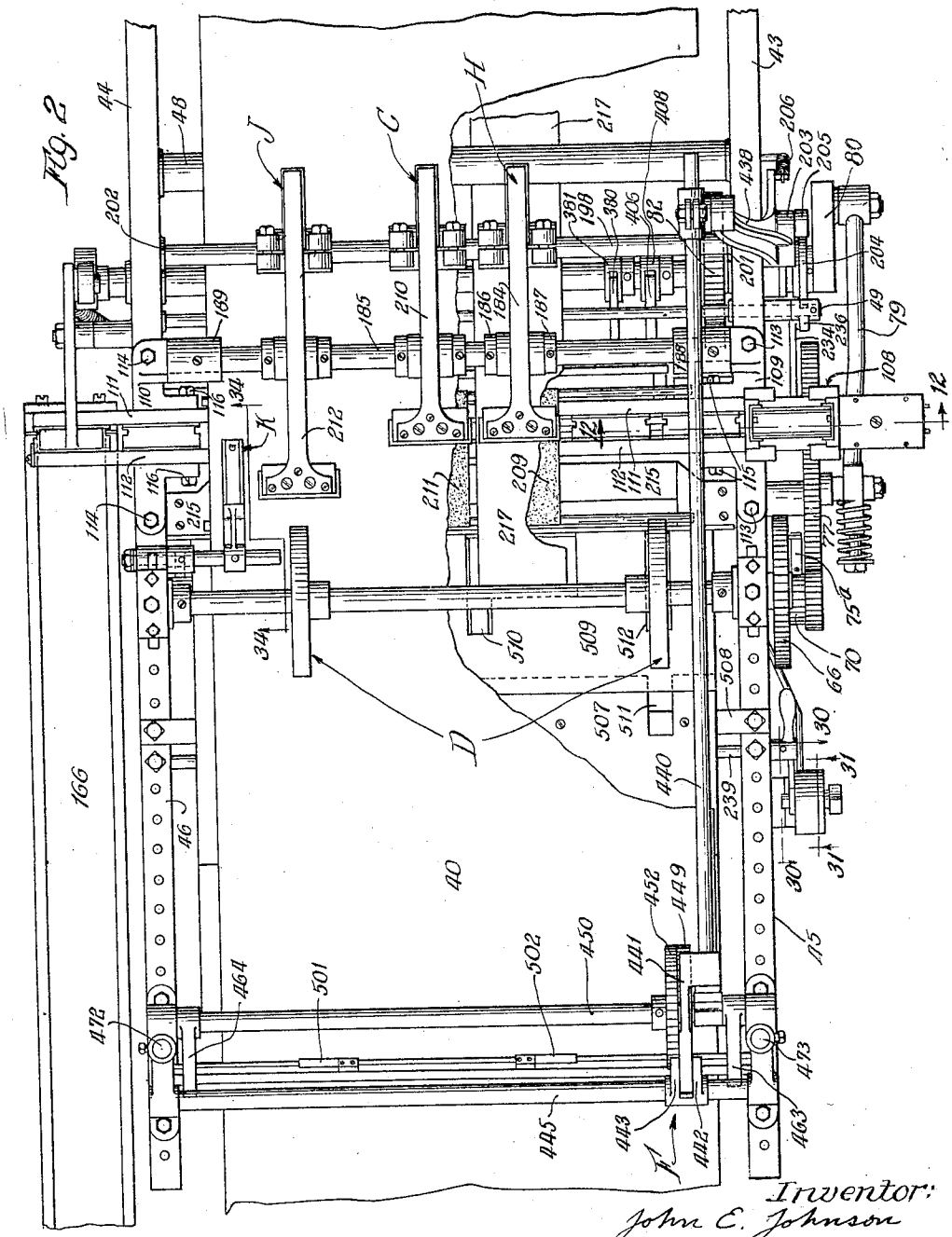

Witness:
P. Haselton

Inventor:
John E. Johnson
By: Jones, Addington, Ames, & Seibold
Attys.

Dec. 3, 1929. J. E. JOHNSON 1,737,721

PRINTING MACHINE

Original Filed Feb. 8, 1923 13 Sheets-Sheet 3

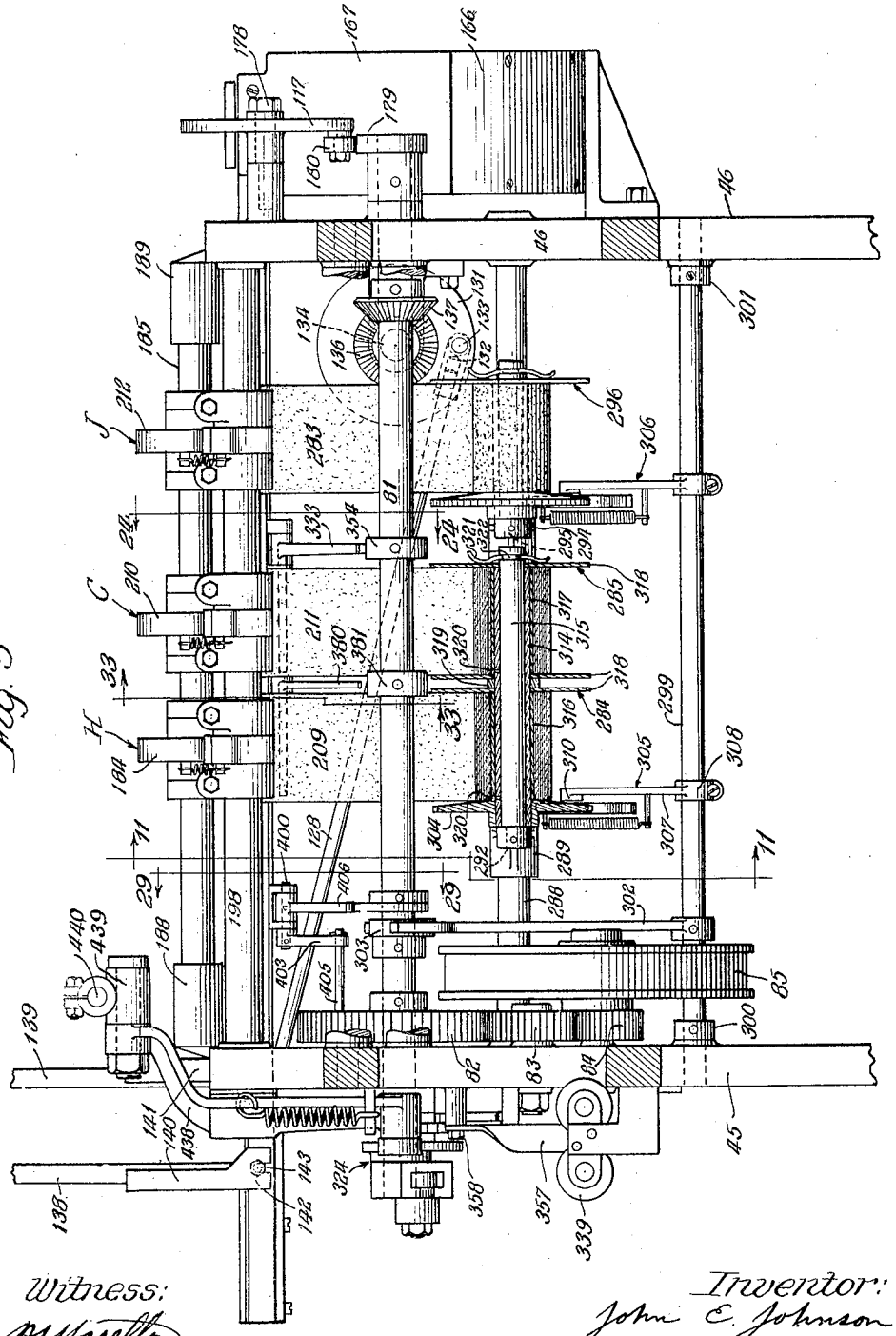

Fig. 5

Witness:
P. H. Haselton

Inventor:
John E. Johnson
By: Jones, Addington, Ames & Seibold
Attys.

Dec. 3, 1929. J. E. JOHNSON 1,737,721

PRINTING MACHINE

Original Filed Feb. 8, 1923 13 Sheets-Sheet 4

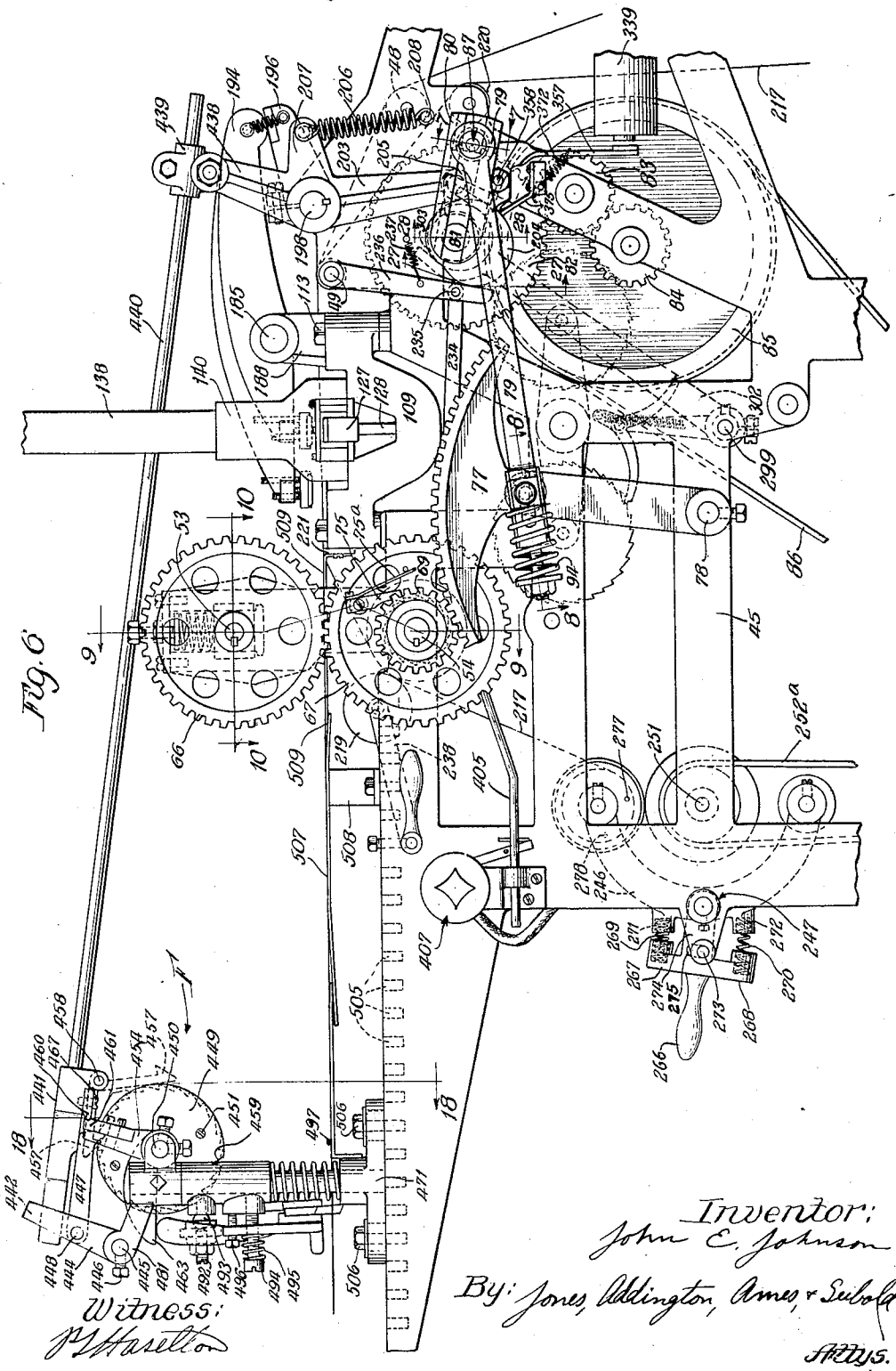

Fig. 6

Witness:
P. Haselton

Inventor:
John E. Johnson
By: Jones, Addington, Ames & Seibold
Attys.

Dec. 3, 1929. J. E. JOHNSON 1,737,721

PRINTING MACHINE

Original Filed Feb. 8, 1923 13 Sheets-Sheet 5

Fig. 10

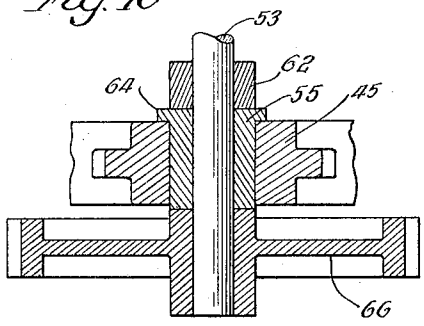

Fig. 9

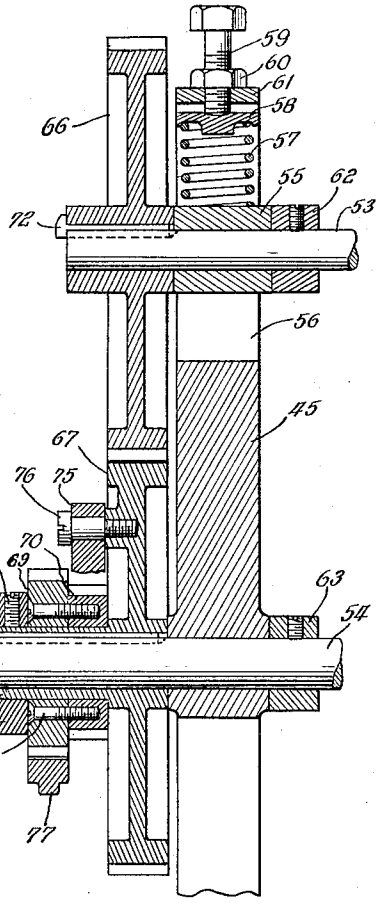

Fig. 7

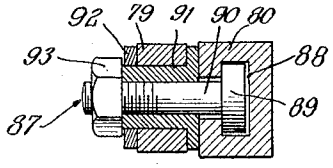

Fig. 8

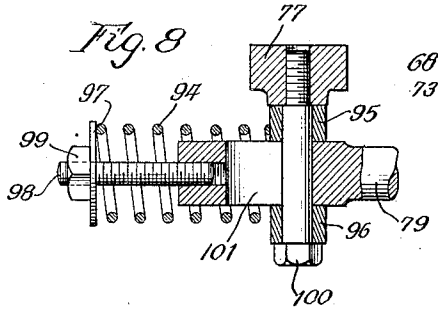

Fig. 16

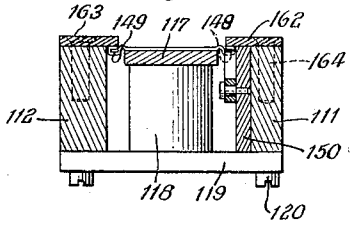

Fig. 17

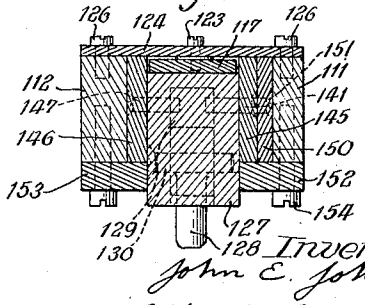

Witness:
P. J. Haselton

Inventor:
John E. Johnson

By: Jones, Addington, Ames, & Seibold
Attys.

Dec. 3, 1929. J. E. JOHNSON 1,737,721

PRINTING MACHINE

Original Filed Feb. 8, 1923 13 Sheets-Sheet 6

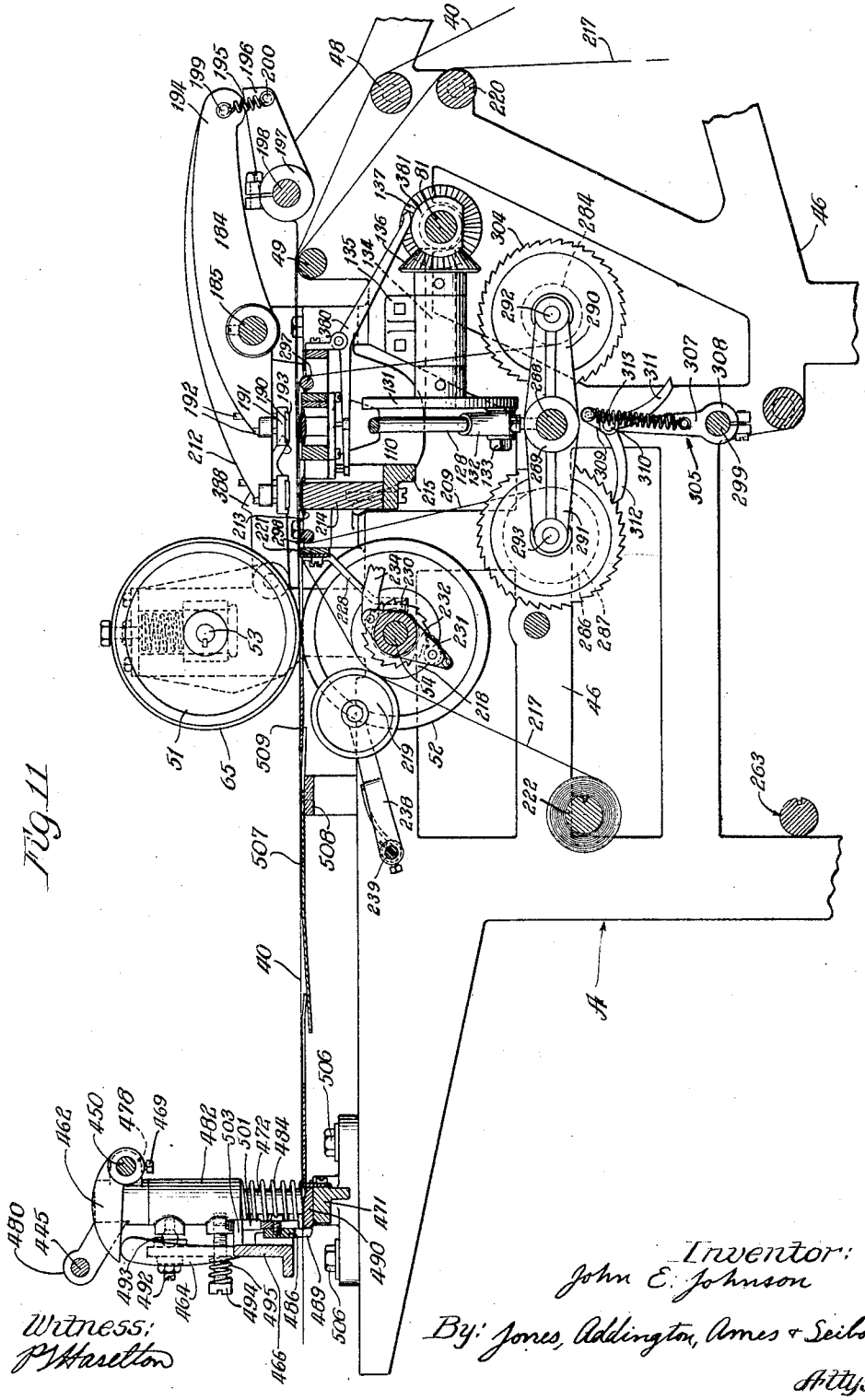

Fig. 11

Witness:
P. Haselton

Inventor:
John E. Johnson
By: Jones, Addington, Ames & Seibold
Attys.

Dec. 3, 1929. J. E. JOHNSON 1,737,721

PRINTING MACHINE

Original Filed Feb. 8, 1923 13 Sheets-Sheet 7

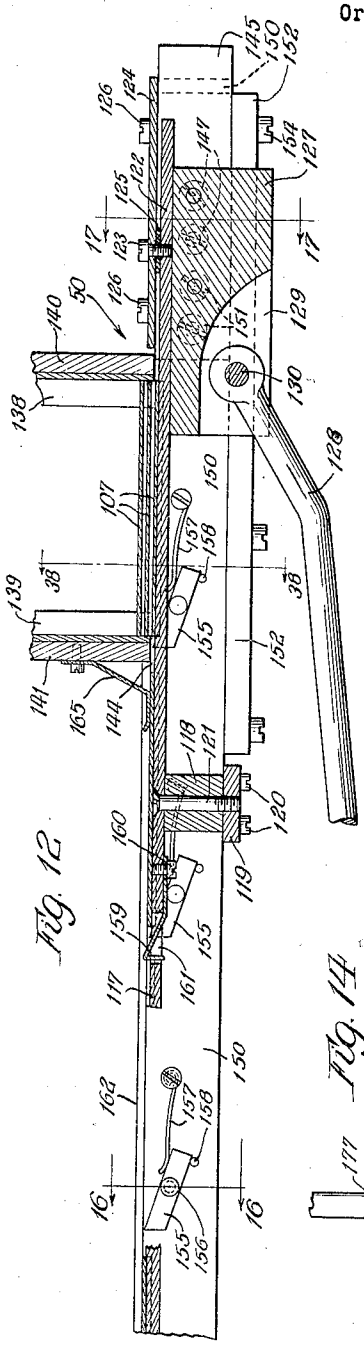

Fig. 12

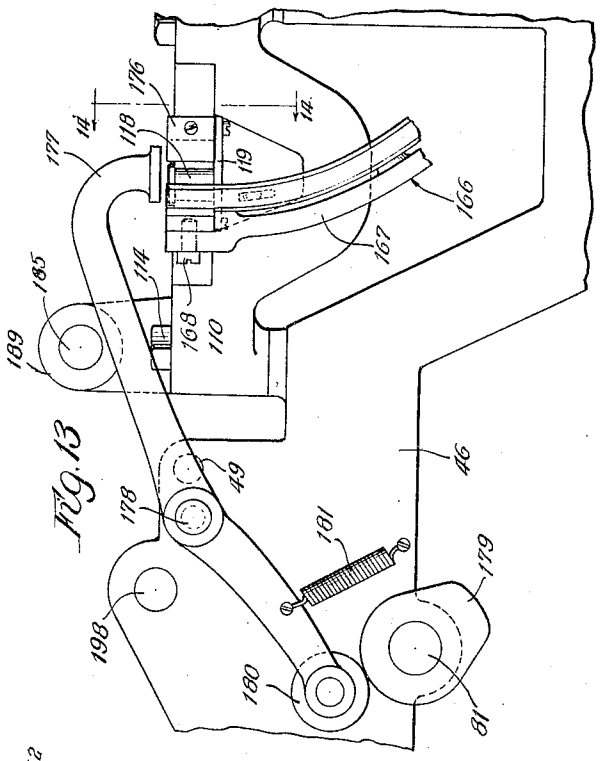

Fig. 13

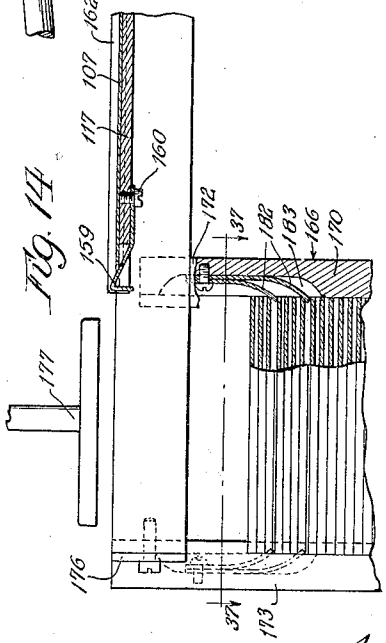

Fig. 14

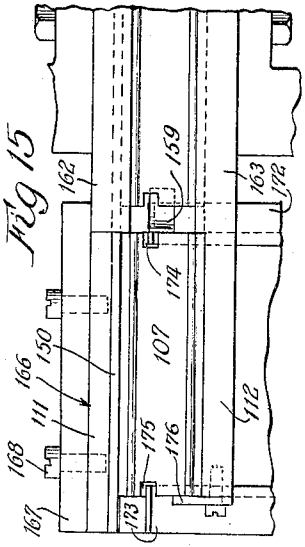

Fig. 15

Witness:
P. Wharton

Inventor:
John E. Johnson

By: Jones, Addington, Ames & Seibold
Attys.

Dec. 3, 1929. J. E. JOHNSON 1,737,721

PRINTING MACHINE

Original Filed Feb. 8, 1923 13 Sheets-Sheet 8

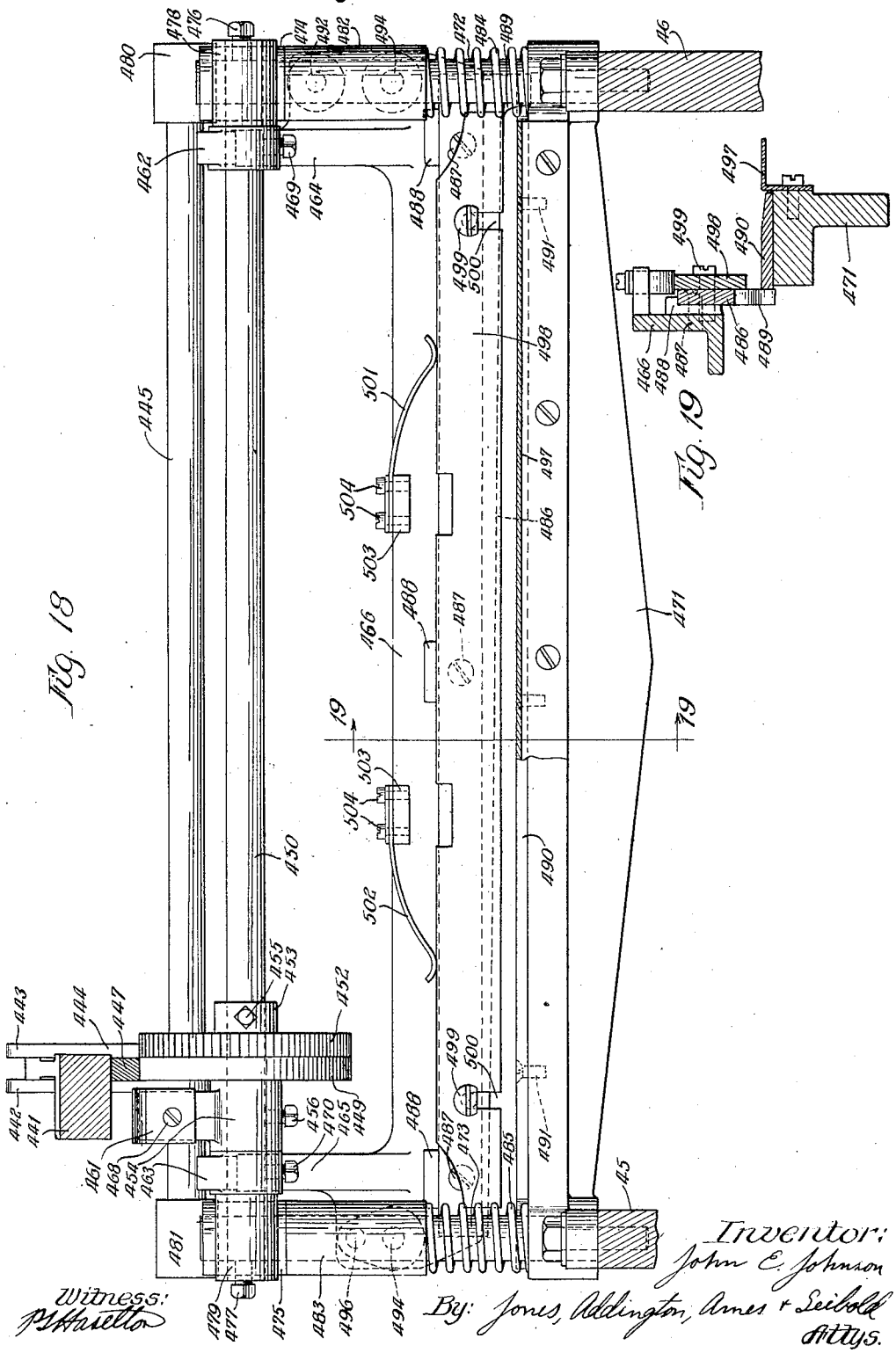

Witness: P. S. Haselton

Inventor: John E. Johnson

By: Jones, Addington, Ames & Seibold Attys.

Dec. 3, 1929. J. E. JOHNSON 1,737,721

PRINTING MACHINE

Original Filed Feb. 8, 1923 13 Sheets-Sheet 9

Fig. 20

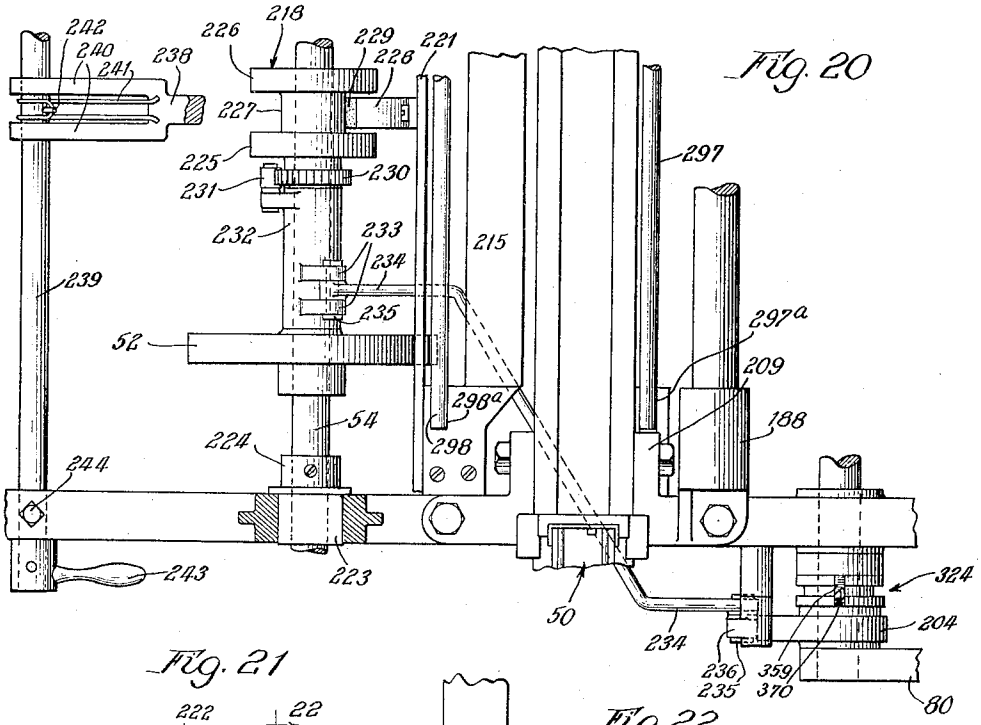

Fig. 21

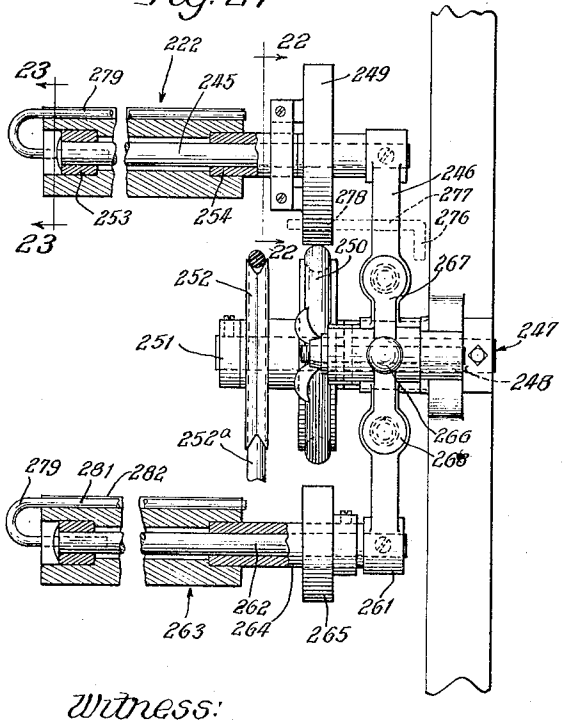

Fig. 22

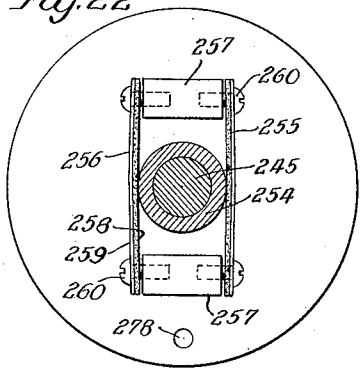

Fig. 23

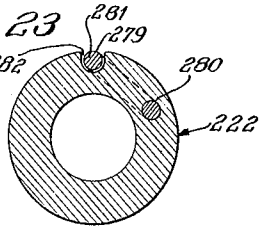

Witness:
P. Whitelton

Inventor:
John E. Johnson
By: Jones, Addington, Ames, & Seibold
Attys.

Dec. 3, 1929. J. E. JOHNSON 1,737,721

PRINTING MACHINE

Original Filed Feb. 8, 1923 13 Sheets-Sheet 10

Fig. 24

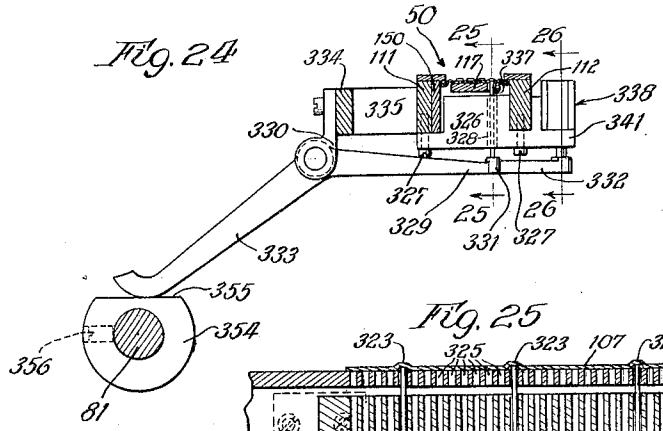

Fig. 25

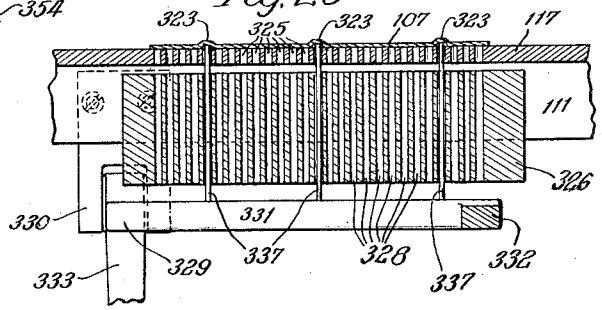

Fig. 26

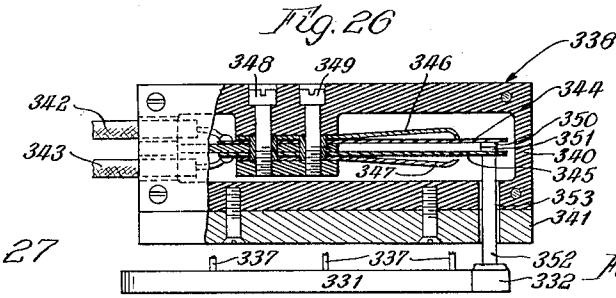

Fig. 27

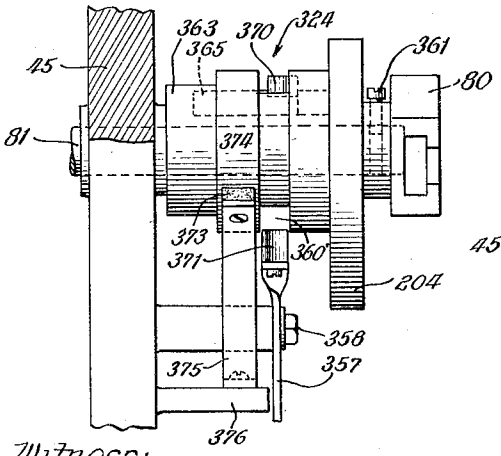

Fig. 28

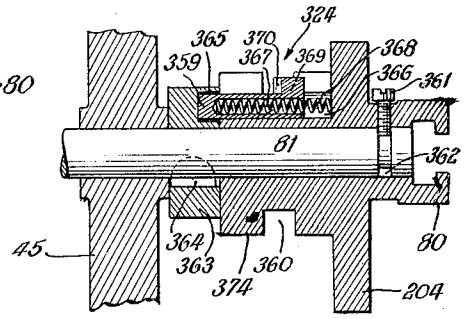

Witness:
P. Thurston

Inventor:
John E. Johnson

By: Jones, Addington, Ames & Seibold
Attys.

Dec. 3, 1929. J. E. JOHNSON 1,737,721

PRINTING MACHINE

Original Filed Feb. 8, 1923 13 Sheets-Sheet 11

Fig. 29

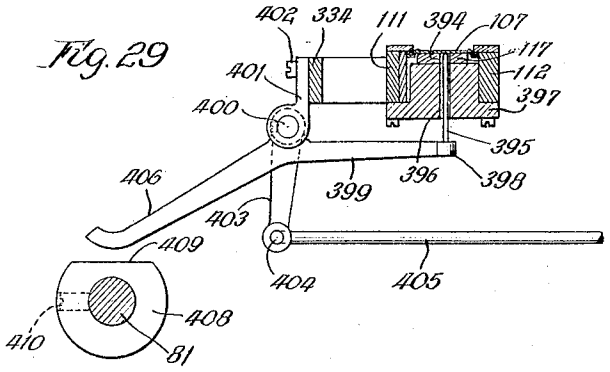

Fig. 30

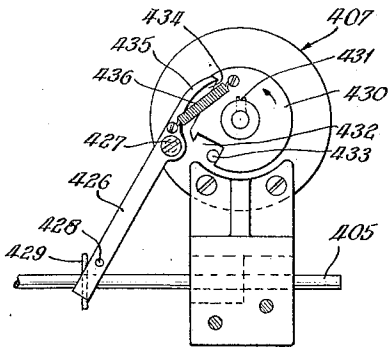

Fig. 31

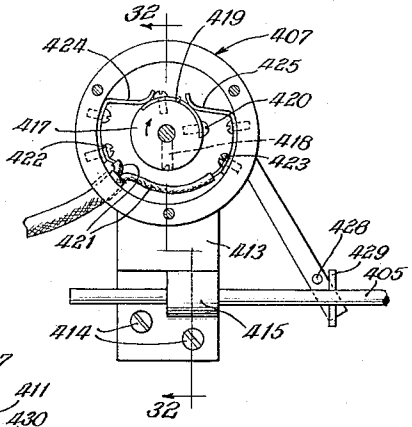

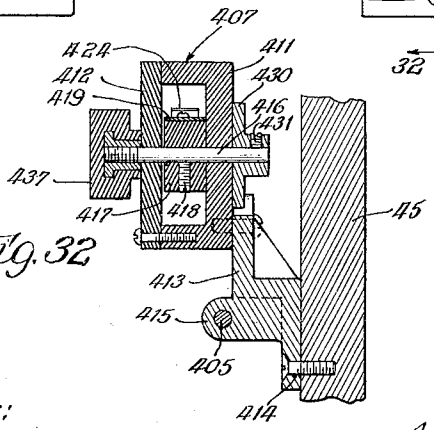

Fig. 32

Witness:
P. Haselton

Inventor:
John E. Johnson

By: Jones, Addington, Ames & Seibold
Attys

Dec. 3, 1929. J. E. JOHNSON 1,737,721

PRINTING MACHINE

Original Filed Feb. 8, 1923 13 Sheets-Sheet 12

Fig. 33

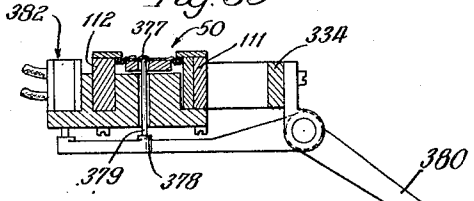

Fig. 34

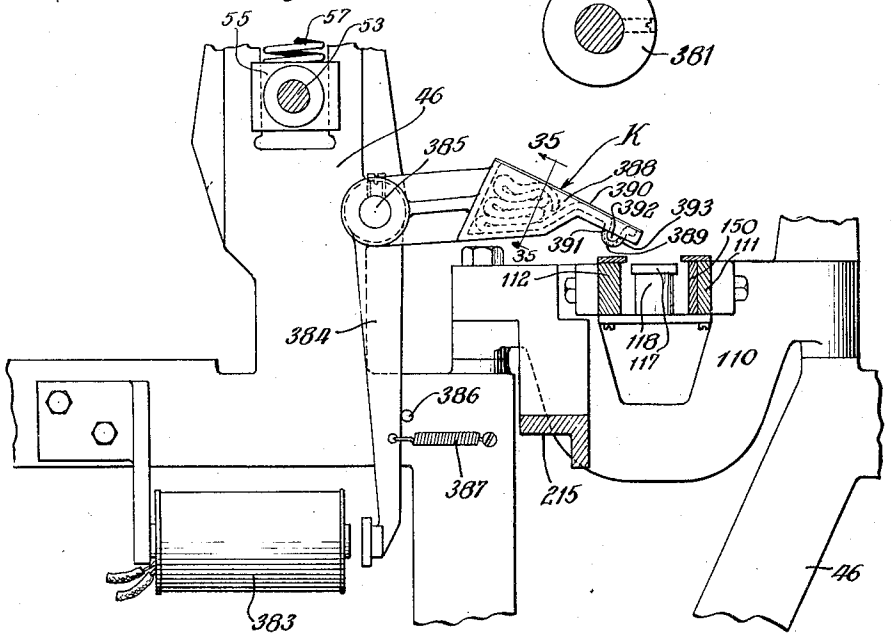

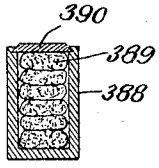

Fig. 35

Witness:
P. Haselton

Inventor:
John E. Johnson
By: Jones, Addington, Ames & Seibold
Attys.

Dec. 3, 1929. J. E. JOHNSON 1,737,721

PRINTING MACHINE

Original Filed Feb. 8, 1923 13 Sheets-Sheet 13

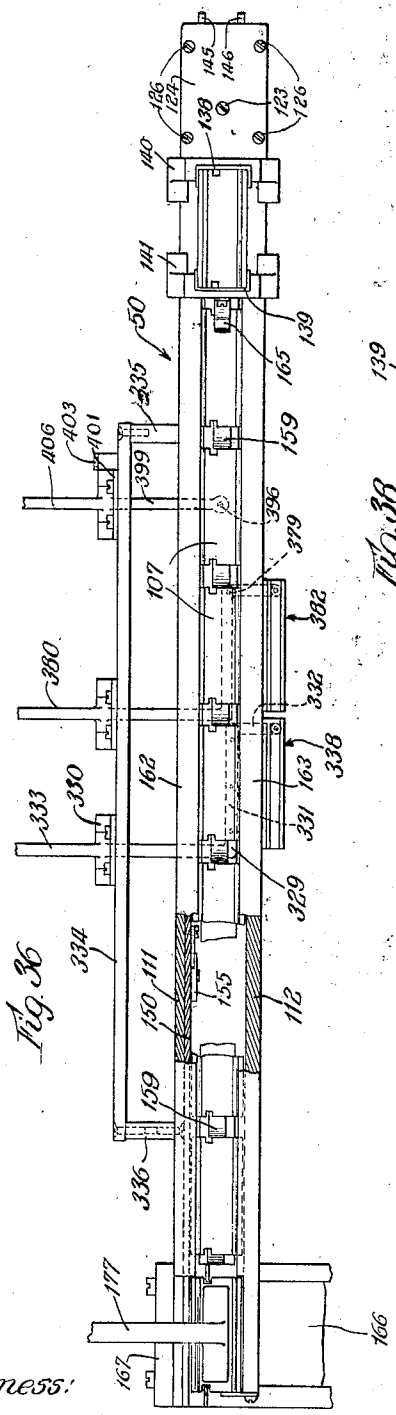

Fig. 36

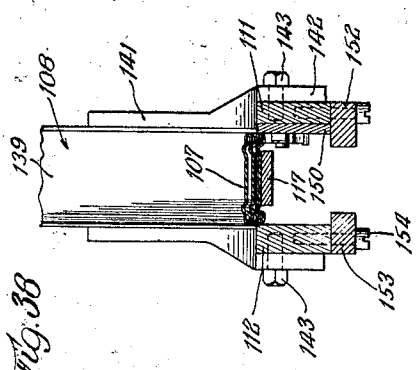

Fig. 36

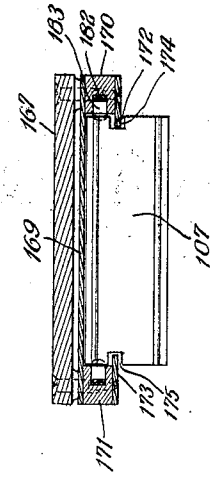

Fig. 37

Witness:
P. S. Hazelton

Inventor:
John E. Johnson
By: Jones, Addington, Ames & Seibold
Attys.

Patented Dec. 3, 1929 1,737,721

UNITED STATES PATENT OFFICE

JOHN E. JOHNSON, OF CHICAGO, ILLINOIS, ASSIGNOR TO SPEEDAUMAT MANUFACTURING COMPANY, OF CHICAGO, ILLINOIS, A CORPORATION OF DELAWARE

PRINTING MACHINE

Application filed February 8, 1923, Serial No. 617,739. Renewed July 20, 1928.

This invention relates to printing machines and more particularly to a form of printing machine adapted to produce mailing wrappers, such as used for newspapers and pamphlets and to print addresses thereon.

One object of this invention is to provide an efficient rapid automatic means for making mailing wrappers of various desired lengths for magazines, newspapers, catalogs and the like, from a continuous roll of paper stock.

Another object of this invention is to provide means in a machine of the above character for imprinting upon the wrappers the addresses of the subscribers or intended recipients thereof and also the return address of the sender.

A further object is to provide means for printing a convenient form of checking list or proof strip having a copy of each address as printed upon the wrappers.

Another object is to provide a means for automatically selecting the particular addresses that are desired to be used at any time, from a large number of addresses included in the general mailing list.

Another object is to provide automatic means for placing a distinguishing mark upon certain wrappers to indicate that these wrappers are the first or last of certain groups of wrappers, which groups are thereby distinguished from other wrappers printed from the same mailing list.

A still further object of this invention is to provide a machine of the character above indicated, which is reliable in operation, comparatively inexpensive of manufacture and which requires very little attention for its proper operation and upkeep.

Other objects will appear upon reference to the following specification and accompanying drawings, in which—

Figure 1 is a side elevational view of the machine comprising the invention;

Fig. 2 is a plan view, in which certain parts are broken away for clearness of illustration;

Figs. 3 and 4 are face and end views, respectively, of an "address mat", such as used in connection with the machine;

Fig. 5 is a cross sectional view taken substantially on the line 5—5 of Fig. 1;

Fig. 6 is an enlarged side elevation view of the principal operating parts;

Figs. 7, 8, 9 and 10 are sectional views taken substantially on the lines 7—7, 8—8, 9—9 and 10—10, respectively, of Fig. 6;

Fig. 11 is a longitudinal sectional view taken substantially on the line 11—11 of Fig. 5;

Fig. 12 is a cross sectional view taken substantially on the line 12—12 of Fig. 2;

Fig. 13 is a side elevational view of the mat discharging portion of the machine;

Fig. 14 is a cross sectional view taken substantially on the line 14—14 of Fig. 13, parts being broken away;

Fig. 15 is a top plan view of the structure shown in Fig. 14;

Figs. 16 and 17 are cross sectional views taken substantially on the lines 16—16 and 17—17, respectively, of Fig. 12;

Fig. 18 is a cross sectional view taken on the line 18—18 of Fig. 6;

Fig. 19 is a cross sectional view taken on the line 19—19 of Fig. 18;

Fig. 20 is a plan view of a portion of the machine, designated hereinafter as the proof-strip feeding mechanism;

Fig. 21 is a front elevation view of a portion of the machine designated hereinafter as the proof-strip winding mechanism, parts thereof being shown in section;

Figs. 22 and 23 are cross sectional views taken on the lines 22—22 and 23—23, respectively, of Fig. 21;

Fig. 24 is a cross sectional view taken substantially on the line 24—24 of Fig. 5;

Figs. 25 and 26 are sectional views taken substantially on the lines 25—25 and 26—26, respectively, of Fig. 24;

Figs. 27 and 28 are cross sectional views, taken respectively on the lines 27—27 and 28—28 of Fig. 6;

Fig. 29 is a cross sectional view taken substantially on the line 29—29 on Fig. 5;

Figs. 30 and 31 are views taken substantially on the lines 30—30 and 31—31, respectively, of Fig. 2;

Fig. 32 is a sectional view taken on the line 32—32 of Fig. 31;

Fig. 33 is a cross sectional view taken substantially on the line 33—33 of Fig. 5;

Fig. 34 is a sectional view taken substantially on the line 34—34 of Fig. 2;

Fig. 35 is a cross sectional view taken on the line 35—35 of Fig. 34;

Fig. 36 is a plan view of the address plate guideway, certain parts being broken away for clearness of illustration;

Fig. 37 is a cross sectional view taken substantially on the line 37—37 of Fig. 14; and,

Fig. 38 is a cross sectional view taken substantially on the line 38—38 of Fig. 12.

Among the principal elements of the structure shown in the drawings are, a frame —A— to which the various parts of the entire machine are attached, a roll of wrapper paper stock —B—, an impression arm and mechanism —C— (Fig. 2), under which paper from the stock roll —B— is drawn by feed rolls —D—, a mechanism at —E— for feeding through the machine a group of address plates from which impressions are taken upon the wrapper paper by the impression mechanism —C—, and a cutting-off machine —F— for cutting the paper stock into the desired wrapper lengths. A roll —G— supplies the necessary paper stock upon which an impression arm and mechanism —H— (Fig. 2) prints a checking list or proof-strip from the address plates as fed through the mechanism at —E—. A proof-strip winding mechanism is shown at —I—. An impression arm and mechanism at —J— (Fig. 2) serves to print a return address upon each wrapper. The mechanism at —K— (Fig. 2, also Figs. 33–35 inclusive) serves to place a distinguishing mark upon certain wrappers which represent the beginning or ending of a special group of addresses. Power for operating the entire machine is supplied by a motor —L—.

The path along which the stock travels from the roll —B— will now be described more in detail.

Wrapper paper stock 40 in the form of a long band of paper of a width equal to that of the desired wrapper is wound upon a stock spindle 41, rotatably mounted upon a shaft 42 supported by projections 43 and 44 of side frames 45 and 46.

The paper stock 40 is drawn from the stock roll —B— under and around a tension roller 47, up over guide bars 48 and 49, and between an address mat guiding mechanism 50 and the impression arms at —C—H— and J, (Fig. 2), by paper feed rollers 51 and 52 (Fig. 11) and is then pushed on through the cut-off mechanism —F— where the paper 40 is cut into separate wrappers.

The feed rollers 51 and 52 are mounted upon shafts 53 and 54, respectively, which are suitably journaled in the side frames 45 and 46, as best shown in Figs. 1 and 9. The bearings for the shaft 53 may be similar at each end of the shaft and preferably comprise, as shown in Fig. 9, a bearing block 55 retained in a slot 56, formed in the frame 45. The bearing block 55 is preferably retained beneath a spring 57, acting between the top of the block 55 and a spring retaining disc 58. The height of the spring retaining disc 58 may be adjusted by a screw 59, having a lock nut 60 and extending through a plate 61 fastened to the frame 45. By turning the screw 59 downwardly, the pressure of the spring 57 upon the bearing 55, and consequently also the pressure of the rollers 51 against the opposing rollers 52 is increased. To decrease the pressure between the rollers 51 and 52, the screw 59 is adjusted upwardly.

The shafts 53 and 54 may be retained in their proper longitudinal position in the journals by collars, as shown at 62 and 63, respectively. The bearing blocks 55 are provided with flanges as at 64 (Fig. 10) for retaining the blocks between the side frames 45 or 46 and the collars 62.

The peripheries of the feed rollers 51 are preferably circumscribed with rubber coverings 65 (Fig. 11) in order to aid in gripping the paper 40.

The feed rollers 51 and 52 are rotated by gears 66 and 67, respectively, mounted at the outer ends of the shafts 53 and 54 outside of the side frame 45. The gears 66 and 67 are fixed against rotation upon the shafts by means of keys 72. (Fig. 9.)

The gear 67 is formed with a hub 68 upon which is rotatably mounted a pinion gear 69 and a ratchet 70, secured to the pinion gear by a plurality of screws 71. The pinion 69 is positioned upon the hub 68 by a collar 73 provided with a set screw 74. A pawl 75 is pivoted on a screw 76 to the gear 67 and is held in engagement with the ratchet 70 by a pawl spring 75^a as indicated in Fig. 6.

Meshing with the pinion 69 is a gear segment 77, which is fixed upon a pin 78 pivoted in the side frame 45 (Fig. 6), and is connected by a connecting rod 79 to a crank 80. The crank 80 is mounted upon a shaft 81 and is rotated thereby. The shaft 81 is rotated by means of a train of gears 82, 83 and 84, each mounted upon the side frame 45 (as appears in Figs. 5 and 6) and which in turn are rotated by a pulley 85 fixed to the gear 84 and connected to any suitable source of power, preferably by a belt 86 to the motor —L—, as shown.

As the shaft 81 and the crank 80 are rotated in a clockwise direction, the connecting rod 79 at first moves the segment 77 to the left (in Fig. 6) and thereby the pinions 69 is also rotated in a clockwise direction and the attached ratchet 70 will ride under the pawl 75. However, upon the completion of the stroke of the crank 80, the gear segment 77 will be

drawn to the right and hence the pinion 69 will then be rotated in a counter-clockwise direction. Under this latter condition, the pawl 75 will engage the ratchet 70 and as a consequence the gears 66 and 67 and the rollers 51 and 52 will be rotated. The paper 40 will thus be advanced a predetermined distance upon each stroke of the gears segment 77.

Since wrappers of various sizes or lengths are sometimes desired, provision has accordingly been made to increase or decrease the travel of the feed rollers 51 or 52 by lengthening or shortening the travel of the gear segment 77. This is accomplished by adjusting the effective length of the crank 80 between the shaft 81 and the pivoting point 87 of the crank 80 with the connecting rod 79. The means for making this adjustment is best shown in Fig. 7. The crank 80 is provided with a slot 88, which is engaged by a head 89 of a pivoting bolt 90. The bolt 90 passes through a bushing 91 which in turn passes through the end of the crank 79. The crank 79 and the bushing 91 are retained upon the bolt 90 by a washer 92 and a nut 93, the nut 93 serving to clamp the bushing 91 firmly against the crank 80. In order to change the position of the connecting rod pivot 87, it is merely necessary to loosen the nut 93 and the entire pivot may then be moved to the desired position along the slot 88, at which point the nut 93 is again tightened.

To avoid any possible sudden pull, sufficient to tear the paper stock 40 by abruptly starting the feed rollers 51 and 52, the power on the feeding stroke of the connecting rod 79 is transmitted to the gear segment 77 through the medium of a spring 94 (see Fig. 8). The spring 94 is mounted at the end of the connecting rod 79, one end pressing against gear segment spacing blocks 95 and 96 and the other end pressing against a spring retaining disc 97, which is held in adjustable position in relation to the connecting rod by a bolt 98 and a nut 99. A pin 100 passing through a slot 101 in the connecting rod 79 and also through the spacing blocks 95 and 96 serves to pivotally attach the connecting rod to the gear segment 77 at this point.

As the connecting rod 79 starts on the feeding stroke toward the right in Fig. 6, the spring 94 is compressed at first and hence the gear segment 77 is given an easy and gradual start. This action avoids the danger of tearing or straining the paper 40 which would result if rigid connections were used between the connecting rod and the gear segment.

The tension relieving roll 47 is mounted in side arms 102, which are pivoted upon the frames 45 and 46, as at 103, (Fig. 1). The side arms 102 are pulled downwardly by coil springs 104 which are attached to the frame —A— in any suitable manner as by pins 105. The downward travel of the arms 102 is limited by stop springs 106 mounted upon the frame —A—. As the paper stock 40 is drawn forward by the feed rollers —D—, the stock roll —B— must also be rotated. The roll —B— having a large mass, possesses considerable inertia. Hence, in order to start suddenly the rotation of the roll from a position at rest, a large force is necessary. Such a force at times would be too great to be safely transmitted by the band of paper stock 40. Therefore, the tension relieving roll 47 may be used to allow a more uniform rotation of the roll —B—, the coil springs 104 serving to absorb any jerking movements that are imparted to the paper by the feed rollers —D—.

Figs. 3 and 4 show the type of address plates or mats 107 which are used in the machine. The mats 107 are stacked in a rack 108 in the order in which it is desired to print the various addresses upon the wrappers.

The address plate guiding mechanism 50 is illustrated in detail by Figs. 12 through 17, 36, 37 and 38. The side frames 45 and 46 are provided respectively with a pair of supporting brackets 109 and 110 (see Fig. 2), which serve to support the ends of side bars 111 and 112, forming part of the guiding mechanism 50. The brackets 109 and 110 are fixed to the side frames 45 and 46, respectively, by screws 113 and 114. The side bars 111 and 112 are attached to the brackets 109 and 110, respectively, by screws 115 and 116. The address plates are adapted to slide one by one from the rack 108 along between the side bars 111 and 112 and upon a support bar 117, which is mounted upon posts as at 118. The posts 118 rest upon cross strips, as at 119, fastened to the underside of the side bars 111 and 112 by screws 120. The support bar 117 is held in place upon the posts 118 by screws, as at 121, which extend through the posts and into the cross strips 119 (see Figs. 12 and 16).

The support bar 117 is also supported at its end 122 by a screw 123, which passes through a plate 124 and into the end 122. The end 122 and the plate 124 are maintained in their proper relatively spaced positions by a washer 125, as shown in Fig. 12. The plate 124 may be fixed to the side bars 111 and 112 by screws 126.

A feed block 127 is adapted to be reciprocated between the side bars 111 and 112 by a connecting rod 128 which is pivoted to the block within a slot 129 by a pin 130. The connecting rod 128 extends downwardly and across the machine, as shown in Figs. 5 and 11, to a rotatable disc 131 to which it is pivotally and eccentrically connected by a lug 132 through which a screw 133 passes into the disc 131. The disc 131 is fixed to a shaft 134

which in turn is journaled in a bearing 135 attached to the side frame 46. At the other end of the shaft 134, a bevel gear 136 is fixed for meshing with a bevel gear 137 fixed upon the shaft 81. The gears 136 and 137 may be both provided with the same number of teeth.

It will thus be seen that as the shaft 81 is rotated in the manner above described, the shaft 134 will also rotate together with the disc 131 which will cause one forward and backward movement both of the rod 128 and the block 127 for each revolution of the shaft 81. Hence for each advancement of the paper stock 40 by the feed rolls 51 and 52, a new address plate may be advanced by the block 127.

The path of travel of the address plates will now be further described. The rack 108 comprises a pair of U-shaped guides 138 and 139 which are maintained in upright position over the guideway 50 by brackets 140 and 141, respectively, having slotted foot portions as at 142 (Fig. 5) engaged by screws 143 extending into the side bars 111 and 112. The rack may be removed as will readily be understood by simply raising the slotted foot portions out of engagement with the screws 143.

The lower address plate 107 within the rack 108 rests upon the support bar 117. Sufficient space at 144 (Fig. 12) is left between the lower end of the rack 108 and the bar 117 to permit a single address plate to be slid from under the rack and along the guideway by the action of the reciprocating block 127. Mat pushers 145 and 146 are secured to each side of the block 127 by screws 147 and serve to engage the depressed edges as 148 and 149 of the address plates or mats 107 and thereby slide the plates out from under the rack 108. The plates are slid further along the guideway by the action of a push bar 150 which is also attached to the block 127 by screws 151 and reciprocates therewith.

The push bar 150, and the mat pushers 145 and 146 slide upon supporting bars 152 and 153 fixed to the underside of the side bars 111 and 112, respectively, by screws 154. These supporting bars, as will be seen, thus also serve to slidably support the block 127. (Fig. 17.)

The push bar 150 is provided along its side with a plurality of pawls 155 pivotally mounted on pins 156 and normally held in active position by springs 157 which press the pawls into contact with stop pins, as at 158. The pawls are adapted to engage the depressed edge 148 of the address plates 107 in a manner similar to the action of the mat pusher 145 and each pawl serves to advance an address plate for a distance equal to the spacing between plates along the guideway for each reciprocation of the block 127. On the return movement of the block 127 and the push bar 150, the pawls 155 slide freely under the address plates by reason of the yielding of the springs 157, and at the same time the plates are checked against any possible backward travel, as would be caused by friction against the pawls, by stop springs 159. The forward movement of the plates meets with no resistance, since the stop springs are depressed as the plate slides thereover. Upon forward movement, the friction between the stop springs and the address plates serves to prevent the plates from being thrown too far ahead, as would possibly happen if the plates were permitted to travel freely in the guideway. The stop springs 159 are fixed to the underside of the support bar 117 by screws 160 and extend up through openings 161 in the support bar.

The address plates are retained upon the support bar 117 by flange strips 162 and 163 fastened to the side bars 111 and 112, respectively, by screws as at 164 (Fig. 16). A spring 165 fixed to the bracket 141 makes frictional contact with each plate as it leaves the rack 108 and prevents any possible excess travel of the plates at this point.

After the desired printing has been done by the impression mechanisms —H—, —C— and —J—, the address plates are pushed on into a discharge galley 166, shown in Figs. 13, 14, 15 and 37. The discharge galley comprises a frame member 167 fixed by screws 168 at the end of the side bar 111 and a channel portion including a base 169, sides 170 and 171 and flange 172 and 173. The channel portion is fastened to the frame 167 in any suitable manner as by screws, as shown in Fig. 37. The flanges 172 and 173 serve to engage end notches 174 and 175, respectively, formed in each address plate and the plates are thereby retained within the channel portion. The discharge galley may be arranged to receive the address plates and retain them in a vertical stack. However, at a point further from its receiving end, the galley may be curved into a horizontal direction (see Fig. 1), in order to deliver the address plates in a horizontal row.

As the address plates leave the support bar 117 as pushed out therefrom by one of the pawls 155, they strike against a stop member 176 which is fastened to the end of the side bar 112 and at the same time drop a short distance into the discharge galley, the notches 174 and 175 being engaged by the flanges 172 and 173. The group of address mats that drop into the discharge galley are further depressed by a depressing arm 177, which is pivoted at 178 to the side frame 46, and which is actuated by a cam 179 fixed upon the rotating shaft 81 (Fig. 13). The arm 177 may be provided with a roller 180 for engaging the surface of the cam 179, and a coil spring 181 may serve to maintain the surfaces of the roller and the cam in contact with each other.

Although the depression arm 177 serves to

pack the address plates very compactly in the discharge galley, the stack of plates tends to expand upwardly when the arm is raised. To prevent this expansion, stop springs as at 182 are located in recesses 183 at each side of the galley in the side members 170 and 171. The stop springs at 182 are shaped so as to permit easy passage of the address plates downward, but obstruct their passage in the upward direction and hence serve to keep the plates tightly packed as appears in Fig. 14. It will be observed that the depressed edges 148 and 149 in conjunction with the longitudinal beads on the opposite sides of the mats 107 provide means by which a stack of plates will nest in the discharge galley. This tendency to nest will prevent any disalignment of the stacked mats such as would cause the sides of the notches 174 and 175 of a plurality of disaligned mats to cooperate to bind against the flanges 172 and 173 in the discharge galley, thereby preventing the progressive advance of the stack of plates under the action of the depression arm 177 (see Fig. 14).

Address impressions upon the wrapper paper 40 are obtained from the mats 107 by means of an impression arm and mechanism —C—, as above stated. An impression is also made at the same time upon the proof strip paper by the mechanism at —H—, this impression being taken from the address mat which is in a position where it is about to be pushed forward under the impression mechanism —C—. This mechanism will now be described.

An impression arm 184 pivotally mounted upon a stationary shaft 185 (Fig. 11) is held in a desired predetermined position along this shaft by collars 186 and 187, each of which is provided with set screws (Fig. 2). The fixed shaft 185 is mounted upon extensions 188 and 189 (Fig. 5), formed respectively upon the supporting brackets 109 and 110. One end of the arm 184 is provided with a platen 190, attached thereto by means of a grooved clamping block 191, which is adjustably fixed to the arm by screws 192. The platen 190 may be removably slid into a suitable groove 193 in the face of the clamping block 191. The other end 194 of the impression arm 184 is held by a spring 195, in contact with a cam arm 196, which is clamped by a split hub 197 to a shaft 198. The spring 195 is attached to the impression arm and the cam arm by means of pins 199 and 200, respectively, as shown. The shaft 198 may be rotatably mounted in suitable bearings 201 and 202 in the side frames 45 and 46, respectively, and may be oscillated therein by means of a crank member 203, which in turn is operated by a cam 204 (Figs. 2 and 6). The crank member 203 is keyed to the shaft 198 and makes contact with the cam 204 by means of a roller 205, rotatably mounted at its lower end. The roller 205 is maintained in contact with the cam 204 by means of a coil spring 206, which is attached at one end to a lug 207, formed upon the crank member 203 and at the other end to a pin 208 fixed in the side frame 45. The cam 204 is rotated by the shaft 81, heretofore referred to and during its rotation the crank member 203 is pushed outwardly against the tension of the coil spring 206, thereby causing the cam arm 196 to push upwardly the end 194 of the impression arm 184, which results in a downward movement of the platen 193, at the other end of the impression arm. The platen 193 presses the proof strip paper firmly against one of the address mats 107, which happens to be positioned at this point at the time and leaves an impression from an ink ribbon 209, upon the wrapper paper.

An address impression arm 210 is constructed in a manner similar to the impression arm 184, above described and hence will not be described in detail. The address impression arm is also supported upon the shaft 185 and operated by the shaft 198 in a manner similar to the operation of the impression arm 184. Address impressions are taken from an ink ribbon 211.

To provide for a return address or any other information, for example, post office permits and serial numbers, which are to be the same on a large number of the wrappers, a third impression arm 212 is provided and is actuated by the shaft 198 in a manner similar to the actuation of the impression arms 184 and 210. The arm 212 is also supported upon the shaft 185. The return address impression is taken from a stationary address plate 213 mounted upon a block 214 which in turn is supported by a cross member 215 extending from the bracket 110 (see Fig. 11). The address plate 213 may, if desired, be of the same type of construction as that illustrated in Figs. 3 and 4, or it may be varied in design to suit particular requirements and is preferably slidably mounted as shown upon the block 214.

The path along which the proof strip passes from rolls —G— through the machine to the proof strip winding mechanism at —I— will now be described in detail.

The proof strip roll —G— is mounted upon brackets as shown at 216, attached to the side frames 45 and 46. The proof strip paper 217 is pulled from the stock roll —G— by proof strip feed rollers 218 and 219 (Fig. 11), over the guide bars 220 and 49, address mat guideway 50, over a guide rod 221 and between the rollers 218 and 219 and is then wound around a roller 222 by a mechanism which will be hereinafter described.

The proof strip feed roll 218 is rotatably mounted upon the shaft 54, which is suitably journaled in the side frames 45 and 46, as shown at 223 in Fig. 20, the shaft being retained in position in the journal by means of collars such as at 224, provided with set

screws as shown. The proof strip feed roll 218 preferably consists of two separate disc rollers 225 and 226, as indicated in Fig. 20, between which is formed a hub 227, which is engaged by a brake member 228 fixed to the guide rod 221. The brake member 228 is provided at its end with a layer of friction material 229, such as wood, and serves to normally prevent the rotation of the feed roll 218. The feed roll 218 is also provided with a ratchet 230, which is engaged by a pawl 231 pivoted upon a pawl crank member 232. The pawl crank member 232 is provided with a hub portion surrounding the shaft 54 and a pair of lugs 233 to which a connecting rod 234 is pivoted at a pin 235. The proof strip feed roll 218 then is rotated by the action of the cam 204 upon the connecting rod 234 (see Figs. 2 and 6), the connecting rod being pivoted at 235 to a lever 236, which in turn is pivoted to the side frame 45 upon the guide rod 49 and is arranged to engage the surface of the cam 204. The lever 236 is retained in contact with the surface of the cam 204 by means of a coil spring 237, which is fixed to the side frame 45, as shown. From the above described construction, it will appear that upon each revolution of the cam 204, the connecting rod 234 will be oscillated and the pawl 231 will rotate the ratchet 230 through an angle corresponding to the spacing of two adjacent teeth upon the ratchet. This amount of rotation will serve to advance the proof strip paper the desired amount for the next address. The brake member 228 prevents over-rotation of the feed rollers and consequent waste of the proof strip paper, since rotation occurs only when the roller 218 is pushed by the pawl 231.

The proof strip paper 217 is pressed firmly against the roller 218 by the roller 219, which is mounted upon an arm 238 supported upon a shaft 239, which in turn is journaled in the side frames 45 and 46. The arm 238 is provided with a pair of lugs 240 embracing the shaft 239 and between which a spring 241 is located for the purpose of pressing the roller 219 firmly into contact with the roller 218. The spring 241 is fixed at one end by means of a pin 242 to the shaft 239 while its other end bears against the arm 238, as shown in Fig. 20. The tension of the spring 241 may be adjusted in order to adjust the pressure upon the roller 219 by means of a handle 243 fixed to the shaft 239. The handle 243 may be turned until the spring 241 is adjusted to give the desired pressure upon the arm 238 and then the shaft 239 may be fixed in position to the frame 45 by tightening a set screw 244.

The receiving roller 222 is rotatably mounted upon a shaft 245 (Fig. 21). The shaft 245 is fixed at one end to a cradle member 246 pivoted at 247 on the side frame 45 by means of a stub shaft 248. Also rotatably mounted upon the shaft 245 is a friction roller 249 rotated by frictional engagement with a motor driven roller 250, which is mounted upon a shaft 251 fixed in side frame 45, and is rotated by a belt 252^a and pulley 252 driven from the motor —L—. The receiving roller 222 is provided with a pair of bearing members 253 and 254 through which the shaft 245 extends. The receiving roller 222 is rotated by frictional engagement of its bearing member 254 with friction bands 255 and 256 secured to lugs 257 formed upon the friction roller 249 (Figs. 21 and 22). The friction bands 255 and 256 comprise strips of friction material 258, such as canvas, together with reenforcing strips of metal 259, which are secured at their ends by screws 260 to the lugs 257. Carried by another end 261 of the cradle 246 is another fixed shaft 262, upon which is rotatably mounted a re-winding roller 263, similar in construction to the receiving roller 222 except that a bearing member 264 extends to the end 261 of the cradle 246 and has fixed thereon a friction roller 265 for engagement with the motor driven roller 250.

A handle member 266, as best shown in Fig. 6, is pivoted upon the shaft 247 and is provided with oppositely projecting lugs 267 and 268 containing recesses engaged by coiled compression springs 269 and 270, respectively, the other ends of the springs engaging the recessed portions 271 and 272 respectively formed upon the cradle 246. The turning movement of the handle 266 is limited by a pin 273 fixed in a lug 274 formed on the side frame 45. The pin engages a slot 275 formed in the handle member 266.

The object of the re-winding roller 263 is for the purpose of re-winding the proof strip paper 217 in order that the first address printed thereon will be at the outside layer upon the roller as finally wound, it being understood that as the proof strip paper is wound upon the receiving roller 222, the addresses thereon will be available in the inverse order from that desired, the first part of the list of addresses being wound upon the inside of the roll. In most cases it would be very inconvenient to use a proof strip wound in this manner and in order to eliminate this inconvenience, the above described re-winding roller has been provided.

When it is desired to use the re-winding roller 263, the handle member 266 (Figs. 6 and 21) is shifted upon the shaft 247 until the pressure of the spring 270 against the cradle 246 is sufficient to turn the cradle about the shaft 247 sufficiently to remove the friction roller 249 from contact with the motor driven roller 250 and to raise the friction roller 265 into contact with the motor driven roller. The outer end of the proof strip paper 217 as wound upon the roller 222 is secured to the re-winding roller 263 and the entire roll of proof strip may be rewound thereon thus

forming a roll in which the addresses are wound in the proper order.

In the re-winding operation it is very desirable to produce a firmly wound roll. In order to accomplish this end, the friction roller 249 is held stationary in respect to the cradle 246 by inserting a suitable pin 276 through the holes 277 and 278 formed respectively in the cradle frame and in the roller, as shown by the dotted lines in Fig. 21. Since the friction roller 249 will now be stationary, the receiving roller can only revolve by the slipping of the bearing 254 between the friction bands 255 and 256, which act as brakes for preventing over-rotation of the receiving roller. Accordingly, the re-winding roller 263 must pull the proof strip paper 217 from the receiving roller against the holding power of the friction bands 255 and 256, and thus a very firmly wound roll results from the re-winding operation.

The proof strip paper 217 is secured to the rollers 222 and 263 beneath clip rods 279, as indicated in Fig. 23. One end of the clip rods fits tightly into a suitable hole 280 formed in the end of the roller and the other end 281 fits snugly in a suitable groove 282 in the periphery of the roll on which the proof strip is secured. The end of the proof strip is inserted in the groove 282 and is clamped therein by the clip rod 279. With this type of retaining means, when it is desired to unwind the paper from the spools, the end of the paper is automatically released when the spool becomes completely unwound.

The mechanism for operating the various inking ribbons will now be described. The proof strip impressions are taken from the inking ribbon 209; address impressions are taken from the ribbon 211 and the return address impressions from a ribbon 283. The ribbons 209 and 211 may be wound from spools 284 and 285 onto corresponding spools 286 and 287 and after the ribbons have passed through the machine in this direction they may be wound back again upon the spools 284 and 285, if desired. (See Figs. 5 and 11.)

A cross bar 288 fixed in the side frames 45 and 46 has mounted thereon a bracket 289, having oppositely projecting arms 290 and 291, at the ends of which spool shafts 292 and 293, respectively are mounted. Another bracket 294 similar to the bracket 289 serves to support a shaft 295, upon which a spool 296, for the return address ink ribbon, is mounted. The bracket 294 is provided with oppositely extending arms, each carrying a shaft and spool in a manner similar to the bracket 289, as will be readily understood although but one of the arms is shown in Fig. 5.

All three of the ribbons 209, 211 and 283 follow similar paths from one set of spools to the other. The path of the ribbon 209 is typical and hence will be described in further detail. As the ribbon 209 leaves the inner side of the spool 284, (see Fig. 11), it passes over a pair of guide rods 297 and 298, located just beneath the path of travel of the paper strips 40 and 217. The guide rod 297 may loosely rest in notches 297a formed in the brackets 209 and 210, (as indicated in Fig. 20), while the guide rod 298 may similarly rest in notches 298a formed in the cross bar 215. Between the guide rods 297 and 298, the ink ribbon passes over the address mat guideway 50. The ribbon rests upon the top of the address mats but beneath the paper strips 40 and 217. Hence when pressure is applied by the impression platens, impressions are taken on the under surface of the paper strips from the ink ribbons. From the guide rod 298, the ribbon 209 passes to the inner side of the spool 286 and is wound thereon.

The mechanism for operating the spools comprises an oscillating shaft 299, journaled in the side frames 45 and 46 and held against longitudinal movement therein by the collars 300 and 301, this shaft being oscillated by the forked arm 302, fixed thereto. The forked arm 302 embraces an eccentric cam 303 fixed to the rotating shaft 81, (Figs. 5 and 6). The spools 284 and 286 and the corresponding spools for the return address ribbon 283 are provided with flanges, as at 304, having ratchets at their peripheries, which are engaged and operated by pawl mechanisms 305 and 306, as indicated in Fig. 5. The pawl mechanisms 305 and 306 are of similar construction and hence the mechanism 305 only will be described.

A lever 307 is fixed to the shaft 299 by a split clamping hub 308 and is provided at its upper end with a double pawl member 309, pivoted at 310 and provided with oppositely projecting pawls 311 and 312 for engaging respectively the ratchet flanges upon the spools 284 and 286. The pawls 311 and 312 are so mounted that but one of them at a time can make contact with one or the other of the ratchets. The ratchet of the spool upon which it is desired to wind the ribbon is placed in engagement with the corresponding pawl and the pawl is maintained in engagement with the ratchet by the coil spring 313, having one end attached to the pawl member and the other end attached to the lever 307.

The pawl member 309 may be turned so that a pawl will contact with the corresponding ratchet and in so doing the coil spring 313 will be turned into a biased position, such that the pawl member will remain in the desired position. Each oscillation of the shaft 299 by the action of the cam 303 and the forked arm 302 therefore results in the turning of the rib-

bon winding spool sufficiently to advance the ribbon into a new position. After the ribbon is entirely wound upon one of the spools, it may be rewound upon the opposite spool by merely turning the pawl member 309, as will be readily understood.

The ribbons 209 and 211 for the proof strip and for the address impressions respectively, are usually moved together and hence the spools 284 and 285 are mounted upon the same shaft. It is not always necessary to use the return address ribbon 283 and hence the spool 296 for this ribbon is mounted upon a separate shaft 295. The construction and mounting of the various sets of spools are similar and accordingly but one set of the spools, 284 and 285, will be described in detail.

The spools 284 and 285 comprise the ratchet flange 304, as above described, which is rotatable upon the shaft 292, a sleeve 314 fixed in the flange 304 and rotatable upon an enlarged extension 315 of the shaft 292, ribbon cores 316 and 317 and the flanges 318. A spacer washer 319 may be used to separate the adjacent flanges of the spools. The flanges and core members may be slid on and off the shaft extension 315, the core members being held against rotation thereon by pins 320 which engage suitable slots at the edge of the core members. A spring clip 321 engaging an annular groove 322 serves to retain the flanges 318 and cores 316 and 317 in position along the shaft extension 315 in a manner such that they may be conveniently removed for renewal of the ribbons.

Many establishments, as for example, mail order houses find it economical and convenient to use but one set of address plates, one for each customer. However, all customers are not necessarily interested in the same form of merchandise and hence it would be unnecessary waste and expense to print wrappers for sending all types of catalogs to the full list of customers. To provide a means for addressing wrappers to only certain particular parties selected from the whole mailing list, the address plates 107 are embossed along one edge with a plurality of small bosses 323, which serve to electrically control a clutch member 324 interposed between the rotating shaft 81 and the impression arm operating cam 204. (The clutch mechanism is best shown in Figs. 20, 27 and 28 and the electrical operating mechanism therefor is shown in Figs. 5, 6, 24, 25 and 36.)

The clutch and control mechanisms will now be described in detail.

The support bar 117, upon which the address plates in the guideway 50 are supported is provided with a plurality of perforations 325, located in the area beneath the impression arm 210. A block 326 is supported from the under side of the side bars 111 and 112 by screws 327 and is also provided with perforations 328 in alignment with the perforations 325. A needle frame 329 pivoted upon a bracket 330 is formed with an arm 331 extending along below the perforations and terminates in a switch operating arm 332. A pawl arm 333 is formed integral with the needle frame 329 and is of sufficient mass to overbalance the needle frame and to thus hold it in the elevated position shown. The bracket 330 is fixed upon a cross-bar 334. The cross-bar 334 is attached at its ends through spacer bars 335 and 336 to the side bar 111. The arm 331 serves to support a plurality of needles 337 which rest thereon and are adapted to be removably inserted into the perforations above described.

With the set-up shown in Fig. 25, three needles are used with spacings corresponding to the three bosses 323 in the address plate 107. With this set-up, each time that an address plate 107 having three bosses 323 with this particular spacing comes into a position over the perforations 325, the three needles 337 will rise up into the bosses (because of the weight of the pawl arm 333) and thus serve to actuate the electrical control mechanism described hereinafter. It will be understood that a different number of bosses and a different spacing of the bosses on the address plates may be used for each group of plates representing a certain class of customers. Certain of the address plates in the mailing list, may, if desired, be provided with two or more combinations of bosses thus including such a plate in two or more groups representing more than one class of customers, such plates serving to actuate the mechanism when any one of several arrangements of the needles 337 is used. When one or more of the needles 337 do not register with the bosses, they will press against the bottom of the address plate which will then act as a spacing bar preventing the needle frame from moving upwardly sufficient to actuate the electrical control mechanism. The number of needles 337 which are used and their spacing along the arm 331 is determined, as will readily be understood, by the particular form of the embossed address plates which are to be selected from the whole mailing list.

Each time that the needles 337 register with the bosses of an address plate, the switch operating arm 332 is raised and actuates a switch 338, (Fig. 26), thereby closing a circuit through an electromagnet 339 (Figs. 5 and 6). The switch 338 is enclosed in a housing 340, mounted upon an extension shelf 341 of the block 326. Terminals 342 and 343 of the electromagnet circuit enter the housing 340 and are attached to spring contact strips 344 and 345, which are tensioned in a manner to normally separate and remain out of contact with each other. The extent of the separation of the contact strips may be limited by flexible stops 346 and 347. The strips

344 and 345, and the stops 346 and 347 are fixed to the housing 340 by screws 348 and 349 and these parts are insulated by suitable strips and bushings of insulation, as shown. The contact strips 344 and 345 may be provided with platinum or other suitable contact points 350 and 351. The switch operating arm 332 may be provided with a push rod 352 extending through an opening 353 into the housing and serving to operate the switch by pressing the lower contact strip 345 upwardly, permitting engagement of the contact points 350 and 351. The flexible strips 344 and 345 and the flexible steps 346 and 347 serve to provide a definitely positioned mounting for the contact points, which at the same time does not materially restrict the free movement of the needle frame 331.

The pawl arm 333 makes contact with the surface of a cam 354, which is fixed upon the rotating shaft 81. The cam 354 is provided with a flat side 355 and is fixed by a set screw 356 with the proper angular adjustment upon the shaft 81 so that the flat side 355 is in contact with the pawl arm 333 only at such times as an address plate should be positioned over the perforations 325. Consequently when the address plates are moving to new positions along the guideway 50, the pawl arm 333 being in contact with the rounded portions of the cam 354, the needle frame will be held down so as to prevent the needles from rising between address plates. Accordingly, the switch 338 can only be operated when an address plate having the proper embossing is positioned directly over the needles 337.

The electromagnet 339 serves to throw into engagement the clutch 324 which fixes the cam 204 and the crank 80 to the rotating shaft 81. Thus, actuation of the electromagnet 339 will result in the actuation of the impression mechanisms —C—, —H— and —J—, the feed rollers —D—, the proof strip feed rollers 218 and 219 and the cutting device —F— as hereinafter described, all of which are supplied with power from the shaft 81 only at such times as the clutch 324 is in engagement. Disengagement of the clutch prevents the actuation of these parts of the machine but does not however stop the operation of the address plate feeding mechanism which is operated by the gear 137, mounted directly upon the shaft 81. Therefore each address plate may pass through the various positions under the impression arms whether an impression is to be taken therefrom, or not.

The clutch 324 and associated parts will now be described in detail. The electromagnet 339 is provided with an armature comprising a bell crank 357 pivoted at 358 to the side frame 45 (see Fig. 6). The upper end of the bell crank 357 is adapted to operate a spring pressed dog 359 within an annular groove 360 on the hub of the cam member 204. The cam member 204 is rotatably mounted upon the shaft 81 and is retained thereon by a screw 361 which engages an annular slot 362 at the end of the shaft 81. A collar 363 fixed to the shaft 81 by a key 364 is provided with a hole 365 for seating the dog 359. The dog 359 is slidably mounted in a slot 366 formed in the cam member 204. The dog is formed with a cavity 367 in which an operating spring 368 of the coiled compression type is seating in a position to exert pressure against the side of the cam 204, as shown. The dog 359 also has a lug 369 formed with a beveled face 370 (see Fig. 20), which is normally pressed against a dog operating block 371 fixed to the bell crank 357. When however during rotation of the shaft 81 and the collar 363, the block 371 is withdrawn from the annular groove 360 by the bell crank 357 and the electromagnet 339, the dog 359 will be free to slide along the slot 366 into its seat 365 by the force of the spring 368. This will result in fixing the cam 204 and the crank 80 in relation to the shaft 81 and hence these parts will also rotate with the shaft.

When the circuit through the electromagnet 339 is opened, the bell crank 357 will be retracted by the force of a coil spring 372, having one end attached to the bell crank and the other end fixed to the side frame 45 (Fig. 6). The block 371 thereupon will be forced into the annular groove 360 again and upon the next succeeding rotation of the cam member 204, the beveled face 370 on the dog 359 will be engaged by the block 371 and hence the dog will be withdrawn from its seat which will result in the disengagement of the clutch. The cam member 204 will be stopped at once from further rotation by a frictional brake shoe 373, acting upon a disc 374 which is formed as an integral part of the cam member 204.

The brake shoe 373 is mounted upon a flexible support 375 which is secured to a lug 376 formed on the side frame 45. The support 375 is formed with sufficient stiffness to retain the cam member 204 stationary when the clutch is disengaged but still does not exert sufficient pressure upon the brake shoe to offer any substantial interference to the turning of the cam 204 when the clutch is in engagement. It will be noted that this type of clutch and brake mechanism provides a means for quickly starting and stopping the impression arm mechanism and feed rollers when the desired address plates come into operating position in the guideway 50.

It will be understood that when the switch 338 is in its closed circuit position, the clutch 324 will be in engagement. After a single stroke has been taken by the impression arms and mechanism, the cam 354 will cause the switch 338 to open and as a result the clutch will become disengaged again. The cam 354 also effects the lowering of the needles 337 out from the bosses 323 and thus permits the ad-

dress plate to pass on and to be replaced by the next succeeding plate. The mechanism will be stopped from any further movement as would result from its inertia, by the action of the brake shoe 373 and thereby any unintended printing from the next succeeding address plate will be avoided. Any unnecessary feeding of wrapper paper and proof strip paper will also be prevented.

Many uses of machines of the type herein described, particularly magazine or newspaper publishers, send all copies of publications destined for one particular town or postoffice, in one package in order to facilitate handling. However, each copy also has its individual wrapper addressed to the subscribers in the usual way. When this mailing arrangement is used, all of the wrappers for subscribers in various localities may be made in successive groups. Consequently, it is desirable to provide some way of distinguishing one group from another. It has been found to be very inconvenient to provide separate trays and storage spaces for each group of address plates. Accordingly, the following described device for distinguishing the various groups is provided, which permits keeping and handling of the address plates in a single large tray.

Either the first, or the last address plate in each group is embossed with one boss, as shown at 377, Fig. 3. This boss together with the mechanism about to be described furnishes means for placing a distinguishing mark upon the wrapper printed from this particular address plate. This mark will hereinafter be termed a "town mark" although obviously the mark is capable of use for distinguishing groups of wrappers for other reasons. The "town mark" mechanism is illustrated in Figs. 33, 34 and 35, and its position is indicated in Figs. 2, 11 and 36.

A needle frame 378 is mounted beneath the guideway 50 and is constructed and operated in a manner similar to the needle frame 329 shown in Fig. 24, above described, but is provided with only a single needle 379 located in position to engage the single boss 377, above referred to. The needle frame 379 is located at the point along the guideway 50 at which the address plates are located just prior to their movement into operating position under the impression arm 210. The needle frame 378 is associated with a pawl arm 380, a cam 381 and a switch 382, which are similar in operation and design to those shown in Figs. 24 and 26, and hence will not be described in detail. The switch 382 serves to close a circuit through an electromagnet 383 which in turn operates a bell crank 384 upon which the marking device "K" is mounted. The bell crank 384 is pivotally mounted on the side frame 46 by the stub shaft 385 and is normally retained in an inactive position against a stop pin 386 by a spring 387. The marking device "K" (Figs. 34 and 35) comprises a container 388 enclosing a wick 389, which is saturated with ink or other suitable marking fluid. A slidably removable cover 390 is provided at the upper edge of the container 388. The wick 389 may extend down through an opening 391 in the container 388, then over a lug 392 and up into the container again through an opening 393. The wick is thus retained securely in a position to make a positive identification mark of uniform width upon the desired wrapper. As will be readily understood, actuation of the switch 382 as effected by the boss 377 results in the closing of the circuit through the electromagnet 383. The electromagnet 383 then operates the marking device "K" and retains the wick 389 in contact with the wrapper paper until the action of the cam 381 again opens the switch 382. The cam 381 operates in a manner similar to the operation of the cam 354, above described, and is adjusted in a manner such that its flat surface permits the needle 379 to rise into the boss 377 just before the address plate is moved to its next position under the impression arm 210.

A device for automatically stopping the operation of the whole machine when the source of supply of address plates becomes exhausted will now be described. This device includes an electrical switch for stopping the motor "L" after all of the address plates have passed through the machine or when because of the failure of some part of the mechanism the plates become jammed or caught and are not properly fed through the machine. Thus further damage to the mechanism or the waste of power is avoided. (This automatic stop is best illustrated by Figs. 29 through 32 and the position of its parts on the machine is indicated in Figs. 5, 6 and 36.)

The support bar 117 of the guideway 50 has an opening 394 through which passes a needle 395 for contacting with the under side of an address plate, such as shown at 107. The needle 395 also passes through an opening 396 formed in a needle guide 397 secured to the under side of the guideway 50.

The needle 395 is supported at an end 398 of a bell-crank 399 which in turn is fixed upon a rotatable shaft 400. The shaft 400 is mounted in a bearing block 401 secured to the cross bar 334 of the machine by screws 402. Also secured to the shaft 400 is a lever 403 pivotally connected at 404 to a connecting rod 405 which serves to operate a switch 407.

A lower end 406 of the bell crank 399 is made heavier than the end 398 and consequently the end 398 and the needle 395 tend to rise until the needle contacts with the under side of an address plate 107.

However, at such times as the position of the address plates is being changed along the

guideway 50 or when a new address plate is about to slide into operating position, it is necessary to retain the needle 395 in the position shown in Fig. 29 to prevent it from rising sufficiently to interfere with the proper movement of the address plates.

To accomplish this result, the shaft 81 is provided with a cam 408 having a surface contacting with the end 406 of the bell crank 399. With the parts in the positions as shown in Fig. 29, an address plate is directly over the opening 394 and, consequently, is in position to hold the upper end of the needle flush with the support bar 117.

The came 408 is provided with a flat portion 409 so that with the parts in the position shown, the cam does not make contact with the end of the bell crank. At all other times, however, such as when the address plates are being replaced, the cam contacts with and supports the end of the bell crank. It will be understood that the cam shaft 81 is associated with the mechanism operating the address plates in such a manner that the rounded surface of the cam 408 is rotated into contact with the bell crank at such times as the address plates are being replaced. The correct adjustment of the cam 408 to produce this result may be obtained by turning the cam to the proper angle upon the shaft 81 and then fixing the cam at this position by a set screw 410.

If, however, for any reason the source of supply of address plates becomes exhausted and when because of the failure of some part of the mechanism the address plates become jammed or caught, then the absence of an address plate covering the end of the needle 395 will permit the needle to rise together with the end 398 of the bell crank.

This motion at this particular time will not be hindered by the cam 408 since the flat surface 409 will be opposite the end 406 of the bell crank. The bell crank will thus be permitted to turn the shaft 400 which will move the lever 403 and the attached connecting rod 405 to the right in Fig. 31. This travel of the connecting rod will serve to operate the switch 407 for opening the circuit of the operating motor "L" of the machine.

The switch 407 as shown in the drawings will now be more fully described.

A switch housing 411 composed preferably of insulating material and having a cover 412 is mounted upon a bracket 413 which in turn is fixed upon a side frame 45 of the machine by screws 414. The connecting rod 405 is provided with a sliding bearing 415 upon the bracket 413.

A commutator shaft 416 is mounted centrally of the housing 411 and serves to rotatably support a commutator 417. The commutator 417 is fixed to the shaft 416 by a set screw 418 and is provided at its periphery with a conducting segment 419 attached by screws 420. Terminals 421 to the motor circuit are fixed by screws 422 and 423 to spring contacts 424 and 425 which press against the commutator 417. The spring contacts 424 and 425 are fixed to the interior wall of the housing 411 and with the commutator in the position illustrated serve to complete a circuit through the segment 419. However, if the commutator and segment are turned slightly in a clock-wise direction, the contact 424 will leave the surface of the segment and thus the circuit will be opened at this point. The contact 425 remains in contact with the segment at all times.

A pawl lever 426 is pivotally attached at 427 to the housing 411 and is provided with a pin 428 at one end for contacting with a similar pin 429 fixed in the connecting rod 405.

The shaft 416 extends to the exterior of the back of the housing 411 and is there provided with a disc 430 fixed thereto by a set screw 431. The disc 430 is provided at its periphery with a notch 432 which by its coaction with a pin 433 fixed in the housing 411 serves to limit the turning movement of the shaft 416 and the commutator 417. The disc 430 is also provided with a notch 434 which may be engaged by a pawl 435 formed upon the lever 426.

The pawl 435 is normally retained in engagement at the notch 434 by a coil spring 436 fixed at one end to the pawl and at the other end to the disc 430.

However, when the connecting rod 405 is moved to the left in Fig. 31 in response to the actuation of the mechanism of Fig. 29, the pin 429 engages the pin 428 and, consequently, the pawl 435 is thrown out of contact with the notched disc 430. The force of the spring 436 thereupon turns the disc 430 and the commutator 417 from the normal circuit closing position shown to the circuit opening position above described. As a result, the power to the motor "L" will be disconnected and the machine will be brought automatically to a stop.

A knob 437 is provided upon the shaft 416 exteriorly of the housing 411 and provides a means for restoring the switch and pawl lever 435 to their normal positions when the wrapper printing machine is to be again started in operation.

The paper cutting devices —F— will now be described as shown in Figs. 6, 11, 18 and 19. The oscillating crank member 203 is provided with an extension 438 which is pivotally connected at its upper end to a sleeve 439. The sleeve 439 surrounds and is clamped to an oscillating connecting rod 440. The connecting rod serves therefore to transmit power from the wrapper printing machine parts to the cutting device and as will readily be understood is given a reciprocating mo-

tion by the action of the cam 204 upon the rotating shaft 81.

Attached to the end of the rod 440 is a bracket 441 which slides back and forth between guide fingers 442 and 443 formed on a bracket 444 which is fixed to a cross rod 445 by a set screw 446. The bracket 441 is supported between the fingers 442 and 443 upon a pawl 447, which is pivoted at 448 to the fingers 442 and 443. The pawl 447 normally rests upon the periphery of a disc 449. The disc 449 is mounted to freely rotate upon a shaft 450 and is fixed by screws 451 to a ratchet disc 452 which is also rotatably mounted upon the shaft 450. The discs 449 and 452 are retained in their proper position along the shaft 450 between a collar 453 and the hub of a cam lever 454 to be hereinafter described. The collar 453 and the cam lever 454 are fixed on the shaft 450 by set screws 455 and 456, respectively.

A pawl 457 may be pivoted at 458 to the bracket 441 and engages and revolves the ratchet disc 452 by an amount equivalent to the distance between two teeth with each reciprocation of the connecting rod 440. The attached disc 449 consequently is revolved also. The disc 449 is provided at its periphery with a plurality of spaced notches as at 459, each of which when turned to a position under the pawl 447 permits the pawl to drop a short distance. The bracket 441 which rests upon the pawl 447 is consequently also lowered. The bracket 441 has secured to its under side a block 460 which upon the lowering of the bracket 441 makes contact with an end piece 461 fixed to the cam lever 454.

When the connecting rod 440 is reciprocated and travels to the left, (in Fig. 1), the block 460 pushing against the end piece 461 serves to turn the cam lever 454 and the shaft 450 a small amount. The shaft 450 has fixed thereto a pair of cutter depression levers 462 and 463, which turn with the shaft and press downwardly on lugs 464 and 465 formed upon a knife bracket 466.

It will be noted that as shown, the block 460 and the end piece 461 are fixed in position by screws 467 and 468, respectively, and hence may be replaced if they become worn after long use.

The disc 449 may be provided with two or more notches as at 459, depending upon the frequency with which it is desired to operate the cutter. This disc may also be removed if desired and replaced by another having a different number of notches providing for cutting a different length of paper unit.

The relative angular positions of the cam lever 454 and of the cutter depression levers 462 and 463 upon the shaft 450 may be adjusted after loosening set screws 469 and 470, respectively, in order to actuate the knife bracket 466 with the proper length of stroke.

A base member 471 is mounted upon the side frames 45 and 46, and has fixed therein at its ends a pair of upright posts 472 and 473. The upper ends of these posts serve to support a pair of brackets 474 and 475 fixed thereto respectively, by set screws 476 and 477. The brackets 474 and 475 are provided with bearings 478 and 479, respectively, for the shaft 450 and with lugs 480 and 481, respectively, for supporting the cross rod 445. By loosening the set screws 476 and 477, above described, the entire operating mechanism may be adjusted to the desired height upon the upright posts 472 and 473.

The knife bracket 466 may be adjustably mounted upon sliding blocks 482 and 483, which slide upon the posts 472 and 473, respectively, and are normally retained in the up position, as shown by coil springs 484 and 485, which surround the posts 472 and 473, respectively. The springs 484 and 485 are interposed between the lower ends of the blocks 482 and 483 and the base member 471.

As best shown in Figs. 18 and 19, a knife blade 486 is mounted upon the knife bracket 466 by screws 487. The raised portions or bosses 488 formed on the knife bracket 466 provide accurate and rigid bearing surfaces for the knife blade 486 upon the surface of the knife bracket 466. The knife blade 486 is provided at one end with an extension 489 which serves to always lap over the edge of a fixed blade 490, which is attached to the base member 471 by screws 491. The extension 489 prevents the possibility of the jamming between the moving knife blade 486 and the fixed blade 490. It will be noted that the blade 486 is tapered or inclined upwardly from the extension 489 in order to obtain a shearing effect.

In the mounting of the knife bracket 466 upon the blocks 482 and 483, a screw 492 provides a locating means for adjusting the relative angular positions of the fixed and moving blades. The screw 492 engages the block 482 by a ball and socket seat at 493, as shown in Fig. 6. Screws 494 surrounded by coil springs 495 serve to press the knife blade 486 into cutting engagement with the fixed blade 490 while a screw 496 provides a fulcrum point upon the block 483 and should be adjusted to correspond with the adjustment of the screw 492.

The paper to be cut is fed from the wrapper printing machine over a guide plate 497 and the fixed blade 490 and under the sliding knife blade 486.

In order to insure a clean, straight cut, the paper is held stationary while the actual cutting takes place by means of a bar 498 which is slidably mounted upon the inner face of the knife blade 486 by pins 499. Slots 500 are provided in the bar 498 which permit the bar to slide upon the pins 499. The bar is normally retained in the position illus-

trated by a pair of flat springs 501 and 502 fixed to the bracket 466 at lugs 503 by screws 504. As the knife blade 486 is lowered the bar 498 contacts with the paper and presses it firmly into contact with the fixed blade 490 where it is firmly held during the cutting operation by the springs 501 and 502. It will be noted that the slots 500 allow the knife blade 486 to pass on beyond the edge of the fixed blade while the bar 498 is stopped by the fixed blade.

The mechanism thus far described permits actual cutting of the paper only when the pawl 447 is permitted to remain in one of the notches 459 and is advantageously used when a plurality of printed items are desired on each sheet which is cut off. Assuming that the wrapper printing machine prints one item during each reciprocation of the connecting rod 440 then the number of items on each sheet will correspond to the number of teeth on the ratchet disc 452 between each of the notches 459 on the disc 449. As shown, the ratchet disc is formed with thirty-six teeth, eighteen between each of the notches 459 on the disc 449. Therefore, each sheet as cut would contain eighteen printed items as produced by the printing machine. This number may be varied to suit individual requirements by simply altering the number of teeth on the ratchet or the disc, or both.

In order to cut off a sheet for every reciprocation of the rod 440, as is usually required with wrapper or label printing machines, the ratchet disc 452 and disc 449 are revolved until the pawl 447 rests in one of the notches 459, and then the pawl 457 is disengaged from the ratchet disc 452 by being revolved on its pivot at 458 to the downwardly pointing position indicated by dotted lines in Fig. 6, thereby permitting the disc 449 to remain stationary and keeping the bracket 441 lowered sufficiently to permit engagement between the block 460 and the end piece 461 with each reciprocation of the rod 440.

The position of the entire cutting device —F— may be adjusted along the side frames 45 and 46 since a plurality of spaced holes 505 are provided along the top edge of the side frames and any of which are adapted to be engaged by clamping bolts 506 which pass through the base member 471. Such an adjustment is desirable in order to insure the proper spacing of the printed addresses in relation to the edges of the wrappers as cut by the cutting device. The connecting rod 440 is also slidably adjustable in the sleeve 439. The guide plate 497 is also constructed in a manner to permit adjustment of the position of the cutting device. The guide plate 497 overlaps a second guide plate 507 which is mounted upon a cross bar 508 (Figs. 2 and 6). The plate 507 together with the bar 508 may be removed from the machine in case the cutter —F— is mounted close to the feed rollers —D—. In this case the guide plate 497 is adapted to directly overlap a third guide plate 509 which is fixed to the cross-bar 221 hereinbefore described.

As shown in Fig. 2, the plate 509 is provided with a suitable opening 510 affording space for the proof strip paper 217 and the proof strip feed rollers. The plates 507 and 509 are provided with slots 511 and 512 respectively, which afford clearance for the feed rollers —D—.

It will thus be seen that a paper cutting device is provided which may be adjusted to cut the product of the wrapper printing machine into the desired short lengths at various rates of speed in respect to the operating speed of the printing machine. Also the above described paper cutter will produce a straight, clean cut in the paper stock.

While I have described one form of my invention, it is understood that I do not desire to have any limitation imposed thereupon except as specifically set forth in the appended claims, or required by the prior art, since mechanical expedients or equivalents of the various elements may be evolved which come within the scope of my invention.

Having thus described my invention, what I claim as new and desire to secure by Letters Patent in the United States, is:

1. In an addressing machine, a feed roll shaft, a wrapper feed roll mounted on said shaft, a proof strip feed roll rotatably mounted upon said shaft, and mechanism comprising a ratchet and pawl rotatably mounted on said shaft for turning said proof strip feed roll independently of said wrapper feed roll.

2. In an addressing machine, a feed roll shaft, a wrapper feed roll mounted on said shaft, a proof strip feed roll of smaller diameter than said wrapper feed roll mounted upon said shaft, independent means for turning each of said rolls, a second wrapper feed roll and a second proof strip feed roll yieldably mounted and pressing respectively against said first named wrapper feed roll and said first named proof strip feed roll.

3. In an addressing machine, a feed roll shaft, a pair of spaced rolls on said shaft for feeding a wrapper strip, a proof strip feed roll of smaller diameter than said spaced rolls and mounted therebetween on said shaft, and a second proof strip feed roll yieldably mounted and pressing against said first named proof strip feed roll.

4. In a wrapper printing machine, a feed roll shaft, a pair of spaced rolls fixed on said shaft for feeding a wrapper strip, a proof strip feed roll of smaller diameter than said spaced rolls and rotatably mounted therebetween on said shaft, a second proof strip feed roll, a spring mounting yieldably pressing said second proof strip feed roll against said

first named proof strip feed roll, and independent ratchet and pawl mechanisms for turning said shaft and for turning said first named proof strip feed roll.

5. In a wrapper printing machine, a wrapper strip and a proof strip in superimposed relation, feed rolls for advancing said wrapper strip, and feed rolls for advancing said proof strip, one of said wrapper strip feed rolls being mounted coaxially with but independently rotatable with respect to one of said proof strip feed rolls.

6. In an addressing machine, an address plate guideway, a support bar at said guideway and having an opening therethrough, a bell crank, a needle member supported on said bell crank and extending through said opening, and switching means operatively associated with said bell crank for actuating an electro-magnetically operable impression arm.

7. In an addressing machine, an address plate guideway, a bell crank, a needle member supported on said bell crank and normally urged by said bell crank into said guideway, switching means connected to said bell crank, for actuating an electro-magnetically operable impression arm and a rotating cam for contacting with said bell crank at predetermined times for withdrawing said needle from said guideway or for preventing the entrance of said needle into said guideway.

8. In an addressing machine, an address plate guideway, means for intermittently advancing address plates through said guideway, mechanism for taking impressions from the address plates in said guideway, mechanism for feeding paper upon which address impressions are to be made, a selector separately engaging the address plates in said guideway, and means controlled by said selector for actuating said impression mechanism and said paper feeding mechanism only when address plates having predetermined characteristics are engaged by said selector.

9. In an addressing machine, an address plate guideway, means for intermittently advancing address plates through said guideway, mechanism for taking impressions from the address plates in said guideway, mechanism for feeding paper upon which address impressions are to be made, mechanism for cutting the paper into wrappers, a selector separately engaging the address plates in said guideway, and means controlled by said selector for actuating said impression mechanism said paper feeding mechanism and said cutting mechanism only when address plates having predetermined characteristics are engaged by said selector.

10. In an addressing machine, an address plate guideway, means for intermittently advancing address plates through said guideway, mechanism for taking impressions from the address plates in said guideway, mechanism for feeding paper upon which address impressions are to be made, mechanism for cutting the paper into wrappers, a selector separately engaging the address plates in said guideway, a switch operable by said selector, an electromagnet controlled by said switch, and a clutch operable by said electromagnet for actuating said mechanisms when address plates having predetermined characteristics are engaged by said selector.

11. In an addressing machine, a rotatable shaft, an address plate guideway, means operated by said shaft for advancing address plates through said guideway, mechanism for taking impressions from address plates in said guideway, mechanism for feeding paper upon which impressions are to be taken, a clutch for operatively connecting said mechanisms to said shaft, and selector mechanism operated by said shaft, said selector mechanism being effective to cause engagement of said clutch upon the occurrence in said guideway of an address plate having predetermined characteristics.

12. In a machine for printing addresses upon wrapper paper, an address plate guideway, means for placing a distinguishing mark upon the paper adjacent an address representative of a given group of addresses, said means comprising a switching device operable upon the positioning in said guideway of an address plate bearing a predetermined distinguishing characteristic, and an electromagnetically operated marking device controlled by said switching device.

13. In an addressing machine, an address plate guideway comprising a centrally positioned address plate support bar, side bars spaced from each side of and parallel to said support bar, and flange strips surmounting said side bars and extending partly over the space between said side bars and said support bars.

14. In an addressing machine, an address plate guideway comprising a centrally positioned address plate support bar, side bars spaced from each side of and parallel to said support bar, flange strips surmounting said side bars for preventing upward movement of address plates in said guideway, a reciprocating bar positioned between one of said side bars and said support bar, a plurality of yieldably mounted pawls extending up from said reciprocating bar for engaging and advancing address plates in said guideway, and a plurality of yieldably mounted pawls mounted on said support bar for preventing backward movement of address plates in said guideway.

15. In an addressing machine, an address plate guideway comprising a centrally positioned address plate support bar, side bars spaced from each side of and parallel to said support bar, a reciprocating block under said support bar, and means fixed to said block

and extending in the space between said support bar and one of said side bars for advancing address plates through said guideway.

16. In an addressing machine, an address plate guideway comprising a centrally positioned address plate support bar, side bars spaced from each side of and parallel to said support bar, an address plate rack positioned over said guideway, a reciprocating block under said support bar, and means fixed to said block and extending in the space between said support bar and one of said side bars for withdrawing address plates from said rack and for advancing address plates through said guideway.

17. In an addressing machine, a rack for receiving address plates as discharged from the machine, a depressing arm for forcing groups of the plates downwardly at intervals into said rack, and means for preventing upward expansion of the group of plates in said rack between the intervals of actuation of said depressing arm.

18. In an addressing machine, a rack for receiving address plates as discharged from the machine, a depressing arm for forcing groups of the plates downwardly at intervals into said rack, and means for preventing upward expansion of the group of plates in said rack between the intervals of actuation of said depressing arm, said means comprising a flexible finger extending downwardly and outwardly from a side of said rack into the path of the plates.

19. In an addressing machine, a rack for receiving address plates as discharged from the machine, said rack comprising oppositely disposed side bars, said side bars being provided with longitudinal grooves, and a plurality of flexible fingers extending downwardly and outwardly of said grooves into the path of the plates for preventing upward expansion of the group of plates within the rack.

20. In an addressing machine the combination comprising a horizontal address plate track for guiding a series of address plates having end notches therein to and from impression position, means for periodically advancing said series of plates, a discharge guideway at the discharge end of said track arranged vertically to receive the plates as they drop from said track, said guideway having a pair of guiding flanges therein to register with the notches in said plates as the latter enter said guideway and serving to guide and support said plates in said guideway as they move toward the discharge end of the guideway, said guideway and said flanges being curved below the point of entrance thereto and extending into a horizontal portion, the horizontal portion being arranged to permit the removal of plates, whereby groups of plates may be removed from the horizontal portion of said guideway without interrupting the operation of said machine, and means in said guideway preventing the reverse movement of the plates therein.

21. In an addressing machine the combination comprising a horizontal address plate guideway for guiding a series of address plates to and from impression position and having a centrally positioned address plate support bar, edge guiding means spaced from said central support bar for engaging the edges of said series of plates and cooperating to guide them along said guideway, a reciprocating feeding device under said support bar, and means operated by said reciprocating device and extending into the path of said plates for periodically advancing said series of plates through said guideway.

22. In an addressing machine the combination comprising a horizontal address plate guideway for guiding a series of address plates to and from impression position and having a centrally positioned address plate support bar, edge guiding means spaced from said central support bar for engaging the edges of said series of plates and cooperating to guide them along said guideway, a reciprocating feeding device under said support bar, and individual plate advancing means operated by said reciprocating device for engaging individual plates of said series and advancing said plates periodically through said guideway, said individual means being spaced a distance greater than the length of a plate so that the registering of a plate in impression position is independent of variation in length of said plates.

23. In an addressing machine the combination comprising a horizontal address plate track for guiding a series of address plates to and from impression position, said plates having end notches therein and formed so as to nest in each other when in a stack, means for periodically advancing said series of plates, and a discharge guideway at the discharge end of said track arranged vertically to receive the plates as they drop from said track, said guideway having a pair of guiding flanges therein to register with the notches in said plates as the latter enter said guideway and serving to guide and support said plates in said guideway, means for forcing a group of plates downwardly into said guideway as plates are successively added to said group, said nesting structures of said plates cooperating to hold said group of plates in alinement so that the notches will not cooperate to bind against said flanges, and means preventing the upward expansion of the group of plates in said guideway between the intervals of operations of said forcing means.

24. In an addressing machine the combination comprising a horizontal address plate track for guiding a series of address plates to and from impression position, said plates

having end notches therein and formed so as to nest in each other when in a stack, means for periodically advancing said series of plates, and a discharge guideway at the discharge end of said track arranged vertically to receive the plates as they drop from said track, said guideway having a pair of guiding flanges therein to register with the notches in said plates as the latter enter said guideway and serving to guide and support said plates in said guideway, said guideway and said flanges being curved below the point of entrance thereto and extending into a horizontal portion, the horizontal portion being arranged to permit the removal of plates, whereby groups of plates may be removed from the horizontal portion of said guideway without interrupting the operation of said machine, means for forcing a group of plates downwardly into said guideway as plates are successively added to said group, said nesting structures of said plates cooperating to hold said group of plates in alinement so that the notches will not cooperate to bind against said flanges, and means preventing the upward movement of said plates in the guideway in the intervals between the operations of said forcing means.

In witness whereof, I have hereunto subscribed my name.

JOHN E. JOHNSON.