(No Model.)

4 Sheets—Sheet 1.

J. A. ROCHE & J. C. BLEY.

ELECTRIC RAILWAY.

No. 590,552. Patented Sept. 21, 1897.

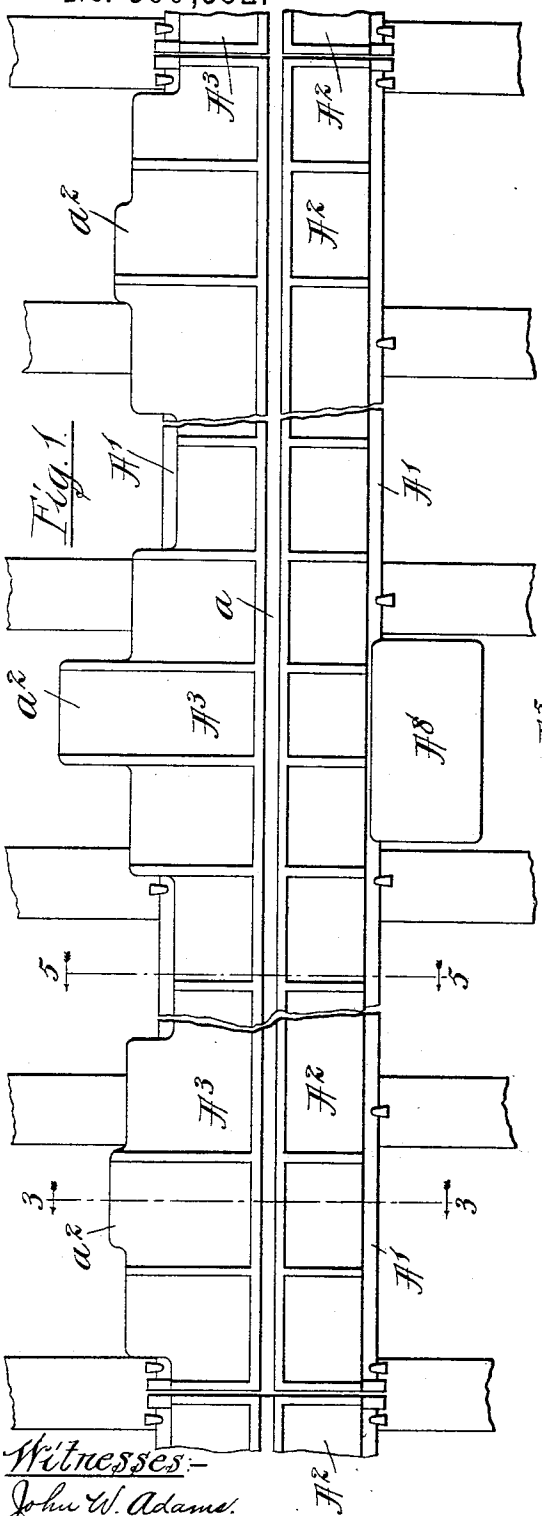

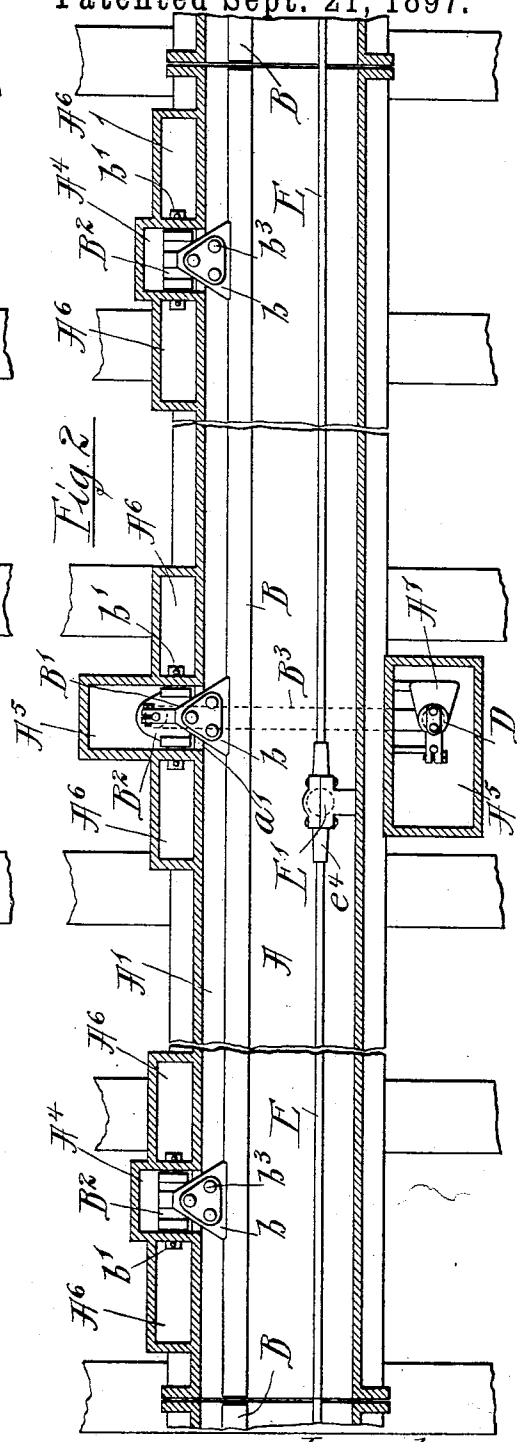

Witnesses:-
John W. Adams.
Clinton Hamblick

Inventors:
John A. Roche & John C. Bley.
by:- Dayton, Poole & Brown their Att'ys.

THE NORRIS PETERS CO., PHOTO-LITHO., WASHINGTON, D. C.

(No Model.) 4 Sheets—Sheet 2.

J. A. ROCHE & J. C. BLEY.

ELECTRIC RAILWAY.

No. 590,552. Patented Sept. 21, 1897.

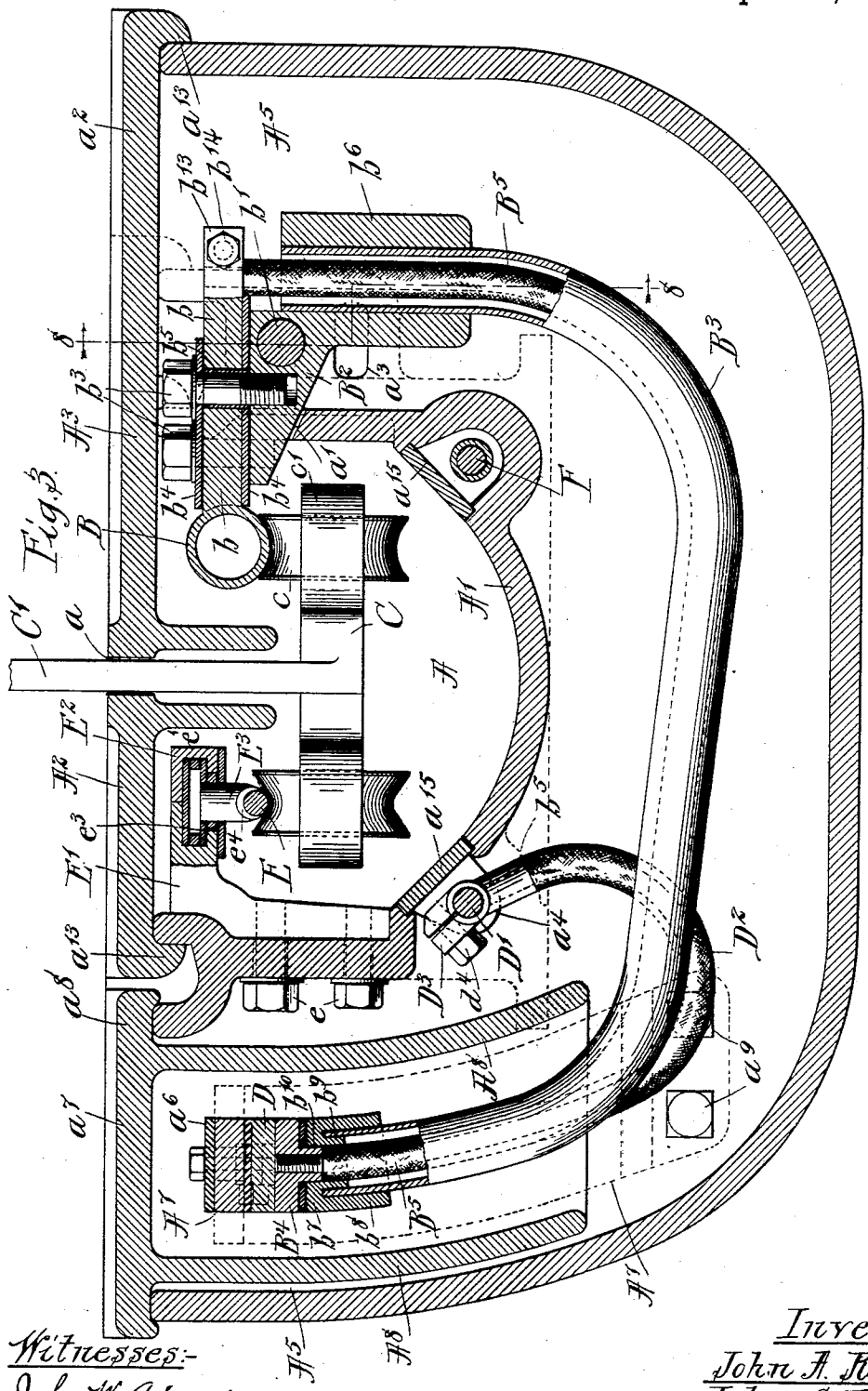

Witnesses:-
John W. Adams.
Clinton Hamlink

Inventors:-
John A. Roche.
John C. Bley.
by:- Dayton, Poole & Brown their Attorneys.

THE NORRIS PETERS CO., PHOTO-LITHO., WASHINGTON, D. C.

(No Model.) 4 Sheets—Sheet 3.

J. A. ROCHE & J. C. BLEY.

ELECTRIC RAILWAY.

No. 590,552. Patented Sept. 21, 1897.

Fig. 4

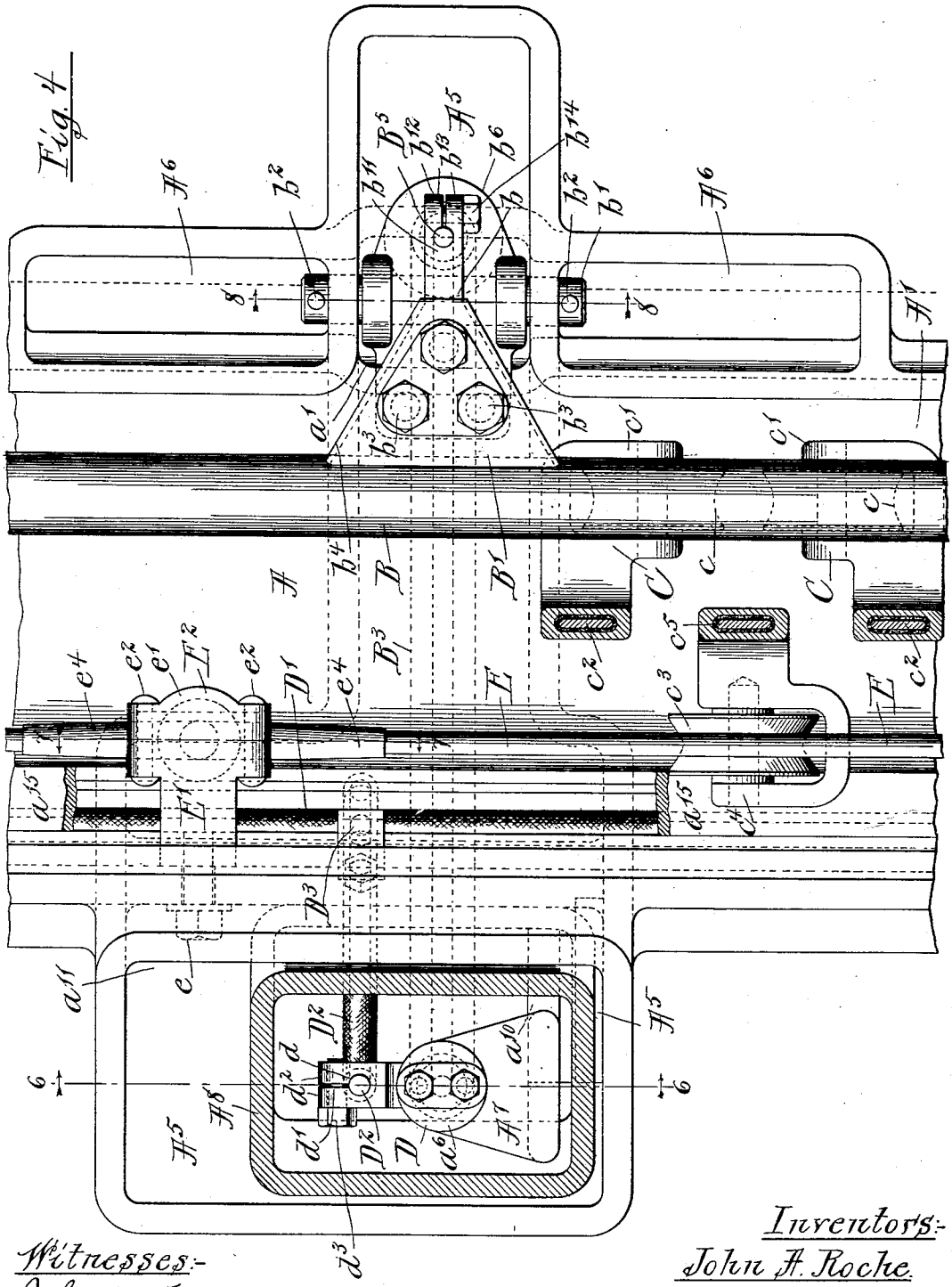

Witnesses:-
John W. Adams.
Clinton Hamblick

Inventors:-
John A. Roche.
John C. Bley.
by:- Clayton, Poole & Brown their Att'ys.

THE NORRIS PETERS CO., PHOTO-LITHO., WASHINGTON, D. C.

(No Model.) 4 Sheets—Sheet 4.

J. A. ROCHE & J. C. BLEY.

ELECTRIC RAILWAY.

No. 590,552. Patented Sept. 21, 1897.

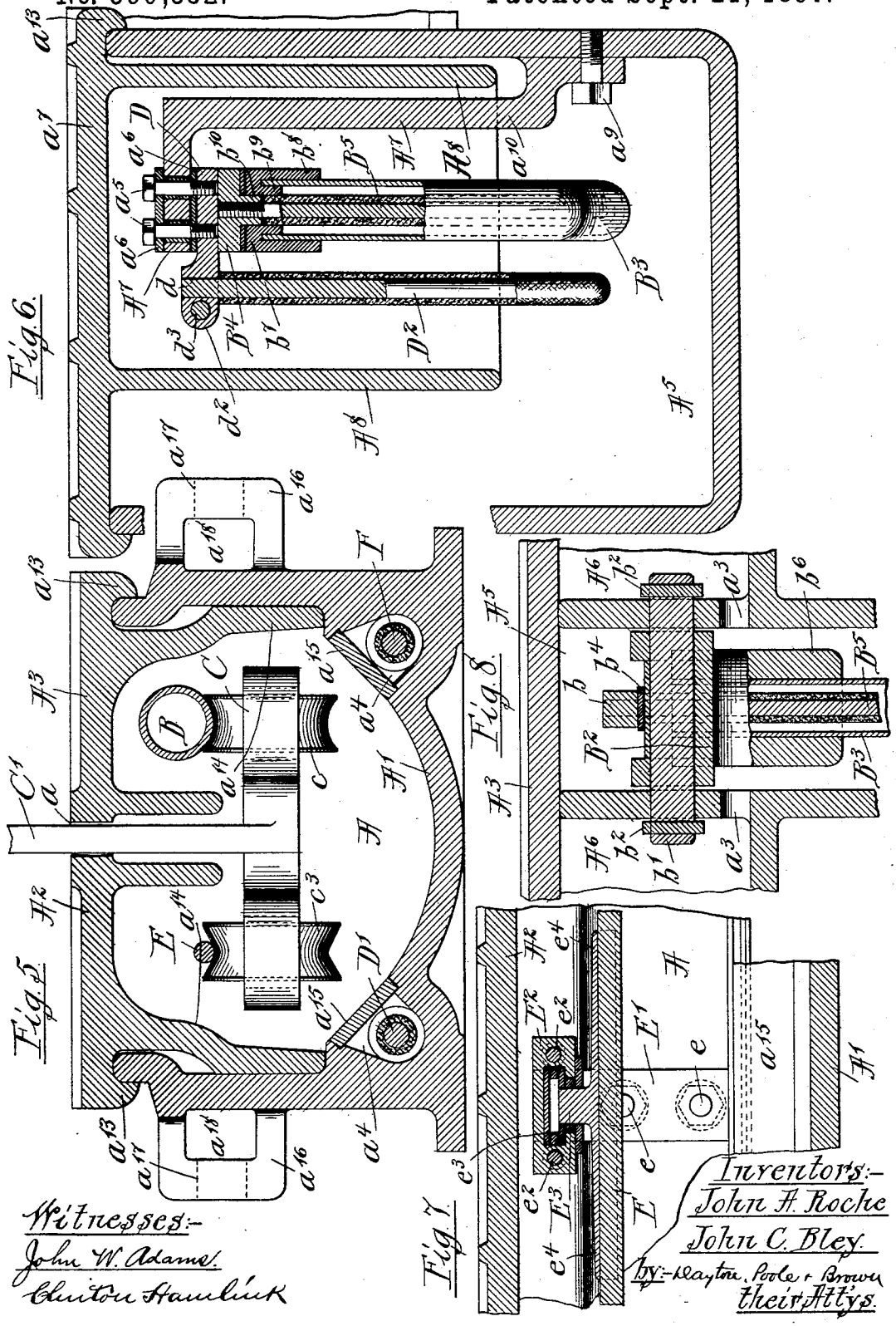

Fig. 6.

Fig. 5.

Fig. 8.

Fig. 7.

Witnesses:-
John W. Adams.
Clinton Hamlink

Inventors:-
John A. Roche
John C. Bley.
by:- Clayton, Poole & Brown
their Att'ys.

THE NORRIS PETERS CO., PHOTO-LITHO., WASHINGTON, D. C

UNITED STATES PATENT OFFICE.

JOHN A. ROCHE AND JOHN C. BLEY, OF CHICAGO, ILLINOIS; SAID BLEY ASSIGNOR TO SAID ROCHE.

ELECTRIC RAILWAY.

SPECIFICATION forming part of Letters Patent No. 590,552, dated September 21, 1897.

Application filed April 13, 1895. Serial No. 545,582. (No model.)

To all whom it may concern.

Be it known that we, JOHN A. ROCHE and JOHN C. BLEY, of Chicago, in the county of Cook and State of Illinois, have invented certain new and useful Improvements in Electric Railways; and we do hereby declare that the following is a full, clear, and exact description thereof, reference being had to the accompanying drawings, and to the letters of reference marked thereon, which form a part of this specification.

This invention relates to devices employed in electric railways for maintaining connection between the traveling vehicles and the supply-conductor, and more especially to devices of this kind having a traveling contact-piece or trolley and a sectional conductor, the sections of which are separately brought into circuit with the supply-conductor in the passage of the trolley.

The invention consists in matters hereinafter described, and pointed out in the appended claims.

In the accompanying drawings, Figure 1 is a top plan view of a section of the conduit closed or with its covering-plates in place thereon. Fig. 2 is a fragmentary top plan section thereof. Fig. 3 is a transverse sectional view thereof, taken on line 3 3 of Fig. 1. Fig. 4 is a fragmentary top plan view of the conduit with the cover-plates removed. Fig. 5 is a transverse section of the conduit, taken on line 5 5 of Fig. 1. Fig. 6 is a sectional detail taken on line 6 6 of Fig. 4. Fig. 7 is a similar view taken on line 7 7 of Fig. 4. Fig. 8 is a similar view taken on line 8 8 of Fig. 4.

In said drawings, A designates the conduit of an underground electric railway, said conduit being designed for location above the ties of the road-bed and either between or at one side of the rails thereof. Said conduit is herein shown as made of a plurality of cast sections placed end to end and forming a continuous subway extending the full length of the road. As herein shown, each conduit-section comprises a channel-shaped base-casting A′ and cover-plates A^2 and A^3, that are secured to the channel A′ with their adjacent edges at a sufficient distance apart to provide a conduit-slot *a* of suitable width between them.

B B designate a series of oscillatory conductor-sections movably mounted within the conduit at one side and near the top thereof, and supported by main supporting-arms B′ B′, to the free ends of which they are attached, each forming an exposed conductor adapted to be engaged by the traveling current-gatherer or trolley C. As herein shown, each of said conductor-sections B is made of tubular form, and has rigidly attached to it a plurality of short arms *b*, conveniently made of triangular form, which are bolted to oscillatory brackets B^2, so that the frame as a whole swings about the oscillatory axis of said brackets, said arms *b* and brackets B^2 together forming the arms B′. As herein shown, the main arms B′ of the sections extend outwardly through recesses or notches *a*′, formed in the upper edges of the adjacent side walls of the conduit, and the brackets B^2 are mounted upon horizontal pivot-pins *b*′, which are supported at their ends in the end walls of exterior pockets or chambers A^4 A^4 and A^5, cast integral with the main channel-casting A′ of the conduit. The ends of the pivot-pins *b*′ are shown as passing through said end walls and as removably secured in place by transverse pins b^2, which are inserted in suitable apertures in their extremities and engage the outer faces of the walls. Small supplementary pockets A^6, provided on the exterior of the conduit and of the chambers A^4 A^4 and A^5 in position to inclose the projecting ends of the pins *b*′, serve to inclose and protect the same, and are each herein shown as made long enough to permit the pins *b*′ to be withdrawn endwise at either side of the bearing. Integral projecting ledges a^2 of the conduit-covers A^3 serve to close the chambers A^4 A^4 and A^5 and the pockets A^6, and apertures a^3 in the bottoms of the latter permit any possible accumulations of moisture to escape from the same. The brackets B^2 extend inwardly through the recesses *a*′ nearly the full length of the arms *b*, and the latter extend over the brackets and are rigidly secured thereto by tap-bolts b^3. An insulating-strip b^4, of vulcanite or other suitable material, is inserted between the arms and brackets and a similar strip between the arms and the heads of the bolts b^3, while the shanks of the latter are insulated

from the arms by sleeves b^5, of vulcanite or other suitable material. The conductor-section B is thus completely insulated from the brackets B^2, and consequently from the conduit.

B^3 designates a hollow arm rigidly attached to one of the brackets B^2—in this instance and preferably the middle one—so as to form in effect a rigid extension of one of the main conductor-supporting arms B'. Said arm extends downwardly from the bracket B^2 and is curved inwardly beneath the conduit and thence upwardly upon the other side of the conduit into position for engagement with a fixed contact-plate D, the middle exterior chamber A^5 being correspondingly extended around and beneath the conduit to inclose said arm and contact-plate. As herein shown, the arm B^3 is made tubular and is tightly inserted at its inner end within a vertical aperture in a depending lug b^6 of the bracket B^2, the extremity of the tube being left open. At its free outer end the tubular arm B^3 terminates in an insulated contact plate or head B^4, and said head is electrically connected with the middle lug B' of the frame B by an insulated wire B^5, which extends through the interior of said tubular arm. In the present instance the cap B^4 is provided with a central screw-threaded aperture which engages the screw-threaded extremity of the wire B^5, the insulation of the latter being cut away to expose said extremity. An insulating-thimble b^7, of vulcanite or similar material, having concentric annular flanges b^8 and b^9, one of which projects into the end of the tubular arm B^3, while the other incloses the same, is inserted beneath the plate B^4 to insulate the same from the tube. A central aperture in the thimble b^7 provides for the passage of the wire B^5 through it, and the plate B^4 is centered thereon by a central boss b^{10}, which projects downwardly into said aperture around the end of the wire. The inner end of the wire B^5 is shown as tightly secured with a clamping-head b^{11}, which projects outwardly from the end of the arm b. The end of said head is perforated to receive the exposed end of the wire and beyond such perforation is divided by a milled slot b^{12} into two separate lugs b^{13}. A clamping-bolt b^{14} extends between the latter and serves when tightened to draw the lugs together, so as to clamp the end of the wire within the head b^{11}, and thus connect it with the section B.

The contact-plates D are in constant electrical communication with an insulated cable D', which constitutes the main line-wire of the conduit and is in this instance located within a longitudinal groove a^4, formed in the inner surface of the conduit-channel A'. Said contact-plates are supported in the upper ends of the chambers A^5 by brackets A^7, which project into the chambers from the adjacent wall thereof. They are secured to the under side of said brackets by suitable bolts a^5, and both the contact-plates and bolts are insulated by layers a^6 of vulcanite or other insulating material. Each of the plates is made long enough to project from beneath its bracket A^7 and is provided near its outer end with an aperture d, within which is inserted the exposed end of an insulated branch wire D^2, leading from the supply-wire D'. A slot d' cut through to the aperture d from the end of the plate divides the same into two separate lugs d^2, and the latter are connected by a clamping-bolt d^3, by the tightening of which the wire D^2 may be securely fastened within the plate. The corner of the channel-plate A' is herein shown as cut away where the section passes through the chamber A^5, so that the groove a^4, which contains the line-wire D', becomes at this point an open slot leading from the conduit into the chamber and leaves said line-wire exposed for connection with the branch wire D^2. Said connection is in this instance afforded by a split sleeve D^3, which encircles the wire D' (its insulation being cut away for this purpose) and is tightly fastened thereon by a clamping-bolt d^4. Said sleeve is provided on one side with a projecting bar b^5, having a screw-threaded aperture which receives the correspondingly screw-threaded end of said branch wire D^2.

In the approved construction shown each contact-plate D and the upper end of the adjacent hollow arm B^3 are, as a further improvement, located within an air-pocket which is open at its lower end only, and which in this instance is formed by an inverted-cup-shaped casting A^8 of rectangular shape in cross-section which is inserted in the adjacent end of the chamber. The bottom a^7 of the cup forms the cover-plate of said end of the chamber, and to this end is made large enough to afford a projecting flange a^8 surrounding the cup and adapted to rest upon the upper edges of the chamber. The lower end of the cup is extended down into the chamber A^5, and at its lower end is shown as curved inwardly as a whole to conform to the curve of the arc of oscillation of the arm B^3. The bracket A^7, which supports the central plate D, is shown as secured to the end wall of the chamber below the lower edge of the cup A^8 by suitable bolts a^9, and the same extends first inwardly to a point beneath the interior of the cup and then upwardly within the latter to a point near the upper end thereof. The upright web a^{10} of the bracket is slightly curved to conform to the shape of the cup, and is arranged to stand close to the wall of the latter, but out of contact therewith. At its upper end said web is bent inward to form the horizontal lug, to which the contact-plate D is bolted, By this construction it is obvious that the cup A^8 may be removed without in any way disturbing the contact-plate D or its supporting-bracket A^7, and that such removal of the cup will fully expose said contacts to free inspection and repair. The air-pocket formed within the cups will effectually prevent the access of water to the contact

devices, it being obvious that inasmuch as there is no way for the air to escape except through the lower end of the cup, if its lower end should be submerged the confined air within the cup will merely be slightly compressed by the rise of water without it. The whole conduit may therefore be filled or even entirely covered with water without wetting said contact devices.

E designates a return-wire supported within the conduit on the opposite side of the slot *a* thereof from the conductor-section B, by means of insulating-brackets E′, which are secured by bolts *e* to the adjacent wall of the conduit. As herein shown, said brackets are formed with a divided clamping-head E^2, which is recessed on its inner faces to receive the head of a depending clip E^3, the removable cap *e′* of the head E^2 being secured in place by rivets e^2 after the clip E^3 is insulated. Insulating-washers e^3, provided around the head of the clip within the clamping-head E^2, serve to insulate the clip from the bracket E′. The lower end of the clip is formed with an elongated jamb portion e^4, which is grooved out on its under surface so as to tightly embrace the upper portion of the wire E for slightly more than half its diameter, and thereby securely hold the same in its suspended position. The bolts *e* are herein shown as removable through the adjacent end a^{11} of the chamber A^5, said end of the chamber being enlarged to receive the cup A^8 and to provide for the removal of said bolts. The maximum width or length of said chamber in the line of the conduit is, however, made sufficiently small to enable said chamber to drop between the ties, and thus not interfere with the laying of the conduit above said ties.

The cover-plates A^2 and A^3 of the conduit are shown as provided with downwardly-projecting marginal flanges a^{13}, which hook over the outer edges of the channel A′, and with deep inner flanges a^{14}, which depend within the conduit and engage the inner surface of the side walls thereof, the joint action of the two flanges being obviously to support the cover-plates against any pressure or weight placed upon the same by the weight of passing traffic vehicles or otherwise.

F designates a second insulated line wire or cable located in a groove a^{12} extending along the opposite side of the conduit from the groove a^4, which cable may be an auxiliary feed-wire or for any other purpose desired. Both the grooves a^4 and a^{12} are furthermore shown as closed by narrow longitudinal plates a^{15}, which may be sealed in any suitable manner to exclude water therefrom.

The operation of the devices thus set forth will be readily understood. Normally the weight of the conductor-section B and arm B^3 causes the extremity of the latter to drop down away from the contact-plate D, but when the trolley C passes beneath the conductor-section it lifts the same so as to elevate the free end of the arm B^3 and thereby brings the plate B^4 into contact with said plate D. The current then flows from the contact-plate through the wire B^5 into the conductor-section B and thence through the trolley to the motor. When the trolley passes from beneath the section B, its frame drops again and separates the plate B^4 from the contact-plate D, thereby throwing said section out of circuit. The ends of the successive sections are arranged in close proximity, although out of contact with each other, and the trolley C is arranged to lift the succeeding section into circuit before releasing the preceding one, so that there is no interruption in the current to the motor. This action is insured in the present instance by providing a double trolley having two trolley-wheels *c c*, the forward one of which always engages the succeeding conductor-section before the rear wheel has left the preceding section. Each of said trolley-wheels *c c* is carried within a section *c′* of the trolley-arm C′, which may be of any desired construction adapting it to pass through the conduit-slot *a*, and through which the usual insulated conductors c^2 lead upwardly to the car-motor. The return-current passes to the continuous return-wire E through a trolley-wheel c^3, supported by an intermediate section c^4 of the trolley-arm, said trolley being connected with the motor by an insulated conductor c^5, provided with the trolley-arm in the same manner as the conductor c^2. (See Fig. 4.)

The projecting arms B^3 may obviously be otherwise located than at the middle of the conductor-sections, as shown in this instance, if so desired, but by thus placing them in the middle of the sections the length of the latter may be made much greater than when the arms are placed at the extremities of the sections, since even if their length be doubled the distance between the arm and the trolley when the latter engages that point of the conductor-section farthest from the arm will be the same in the two constructions and the tendency of the conductor-section to twist, so as to permit a separation between the extremity of the arm and the contact-plate, thereby prematurely breaking the circuit or to twist sufficiently to cause the arm to lag in its movement when the section is struck by the trolley and thereby cause a delay in the closing of the circuit, is no greater in the one case than in the other, notwithstanding the difference in the length of the sections in the two constructions.

The usual transverse tie-rods (not herein illustrated) for securing the conduit to the rails and maintaining the permanent alinement thereof are designed to be conveniently attached to the conduit by means of lateral lugs a^{16} thereon. (See Fig. 5.) Said lugs are preferably made of loop shape, with suitable perforations a^{17} in their outer faces through

which the tie-rods may be inserted, and with inner recesses a^{18} to receive the adjusting-nuts on the ends of said tie-rods.

We claim as our invention—

1. The combination with a movable conductor-section of supporting-arms for the same, comprising pivotally-supported brackets and metal arms permanently attached to the conductor-section and secured to said brackets by insulating connections, and contact devices for connecting the conductor-sections with the supply-wire embracing stationary and movable contact-pieces, rigid arms attached to the said brackets and carrying the movable contact-pieces and insulated conductors attached to the metal arms of the conductor-section and extending along the said rigid arm to the said movable contact-piece, substantially as described.

2. The combination with a slotted conduit, of a conductor-section and supporting-arms for the same, comprising brackets pivoted to the side wall of the conduit and metal arms permanently secured to the conductor-section and attached to the said brackets by insulated connections, substantially as described.

3. The combination with a slotted conduit of a conductor-section pivotally supported within the conduit, a stationary contact-piece connected with a supply-conductor, a movable contact-piece and connections between said movable contact-piece and the said conductor-section, said conduit being provided with a removable cover located over the contact-pieces and provided with integral downwardly-opening air-pockets, substantially as described.

4. The combination with a slotted conduit, of a sectional conductor comprising a series of oscillatory conductor-sections, arms on said sections extending around and beneath the conduit and provided with contact-pieces at their free ends, exterior chambers on the conduit inclosing said arms, inverted cups inserted in the said chambers and forming downwardly-opening air-pockets into which the free ends of the arms project, brackets secured to the walls of the chambers and projecting upwardly into said cups, contact-plates secured to said brackets above the ends of the arms and adapted for contact therewith, and a supply-wire connected with said contact-plates, substantially as described.

5. The combination with a slotted conduit, of a sectional conductor composed of a series of oscillatory conductor-sections, projecting arms on said sections extending around and beneath the conduit and provided with contact-plates at their free ends, exterior chambers on the conduit inclosing said arms, contact-plates located in the upper end of said chambers in proximity to the arms, a supply-conductor located in the conduit, the bottom of the conduit being cut away to expose the wire where it passes through the chambers, and insulated connecting-wires leading from the contact-plates and secured to the exposed portions of the supply-wire, substantially as described.

6. The combination with a slotted conduit, of a series of oscillatory conductor-sections, a plurality of rigidly-attached arms, oscillatory brackets supporting said arms and sections and insulated therefrom, hollow arms secured to said brackets and extending beneath the conduit, contact-pieces on the extremities of said arms, insulated conductors leading from said contact-pieces through the hollow arms and connected with the arms of the conductor-sections, stationary contact-pieces located superjacent to the contact-pieces on the arms and a supply-conductor connected with said stationary contact-pieces, substantially as described.

7. The combination with a sectional conductor having separately-movable insulated sections, and a supply-conductor, of supporting-arms for the sectional conductor comprising pivotally-supported brackets, metal arms permanently attached to the conductor-sections and secured to said brackets by insulating connections, stationary contact-pieces connected with the supply-conductor, tubular arms attached to said brackets and carrying movable contact-pieces at their free ends and insulated conductors attached to the said arms on the conductor-sections and extending through said hollow arms to the movable contact-pieces, substantially as described.

8. The combination with a sectional conductor having separately-movable insulated sections, and a supply-conductor, of supporting-arms for the conductor-sections comprising pivotally-supported brackets, metal arms permanently attached to the conductor-sections and secured to said brackets by insulating connections, stationary contact-plates connected with the supply-conductor, tubular arms attached to said brackets and carrying movable contact-pieces at their free ends and insulated conductors attached to the said arms on the conductor-sections and extending through said hollow arms to the movable contact-pieces, said movable and stationary contact-pieces being located at the side of the sectional conductor opposite that at which the said pivoted brackets are located and said hollow arms extending from the brackets beneath the conductor to the contact-pieces, substantially as described.

9. The combination with a sectional conductor having separately-movable insulated sections, and a supply-conductor, of supporting-arms for the conductor-sections comprising pivotally-supported brackets, metal arms permanently attached to the conductor-sections and secured to said brackets by insulating connections, stationary contact-pieces connected with the supply-conductor, tubular arms attached to said brackets and carrying movable contact-pieces at their free ends, insulated conductors attached to the said arms on the conductor-sections and ex-

tending through said hollow arms to the movable contact-pieces, and a slotted conduit within which the said conductor is located; said movable and stationary contact-pieces being located outside of the conduit at the side thereof remote from the said pivoted brackets, and the hollow arms being arranged to extend thereto by passing beneath the conduit, substantially as described.

In testimony that we claim the foregoing as our invention we affix our signatures, in presence of two witnesses, this 27th day of March, A. D. 1895.

JOHN A. ROCHE.
JOHN C. BLEY.

Witnesses:
C. CLARENCE POOLE,
HENRY W. CARTER.