No. 611,548. Patented Sept. 27, 1898.

D. ANDERSON & D. BEVAN.

DERAILING DEVICE.

(Application filed Aug. 11, 1898.)

(No Model.)

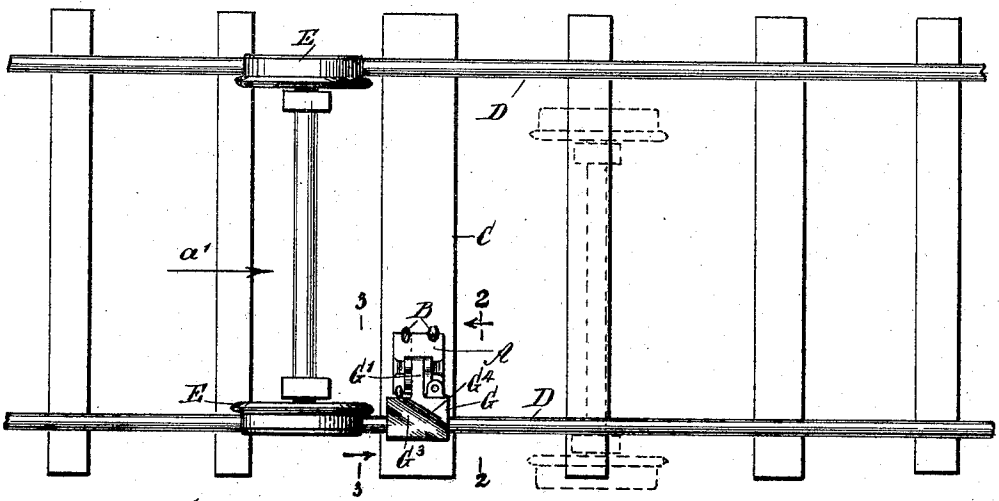

Fig. 1

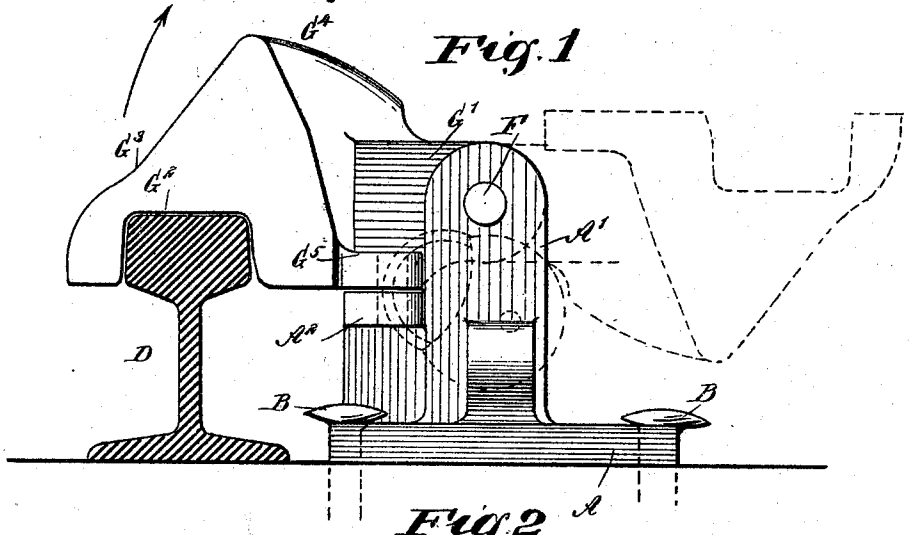

Fig. 2

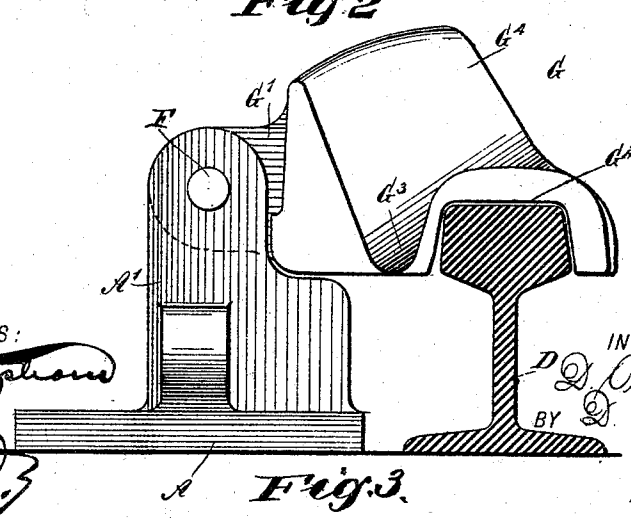

Fig. 3.

WITNESSES:

John A. Bergstrom

Geo. G. Hoster

INVENTORS

D. Anderson

BY D. Bevan

Munn

ATTORNEYS.

THE NATIONAL LITTERS CO. PHOTO-LITH. WASHINGTON, D. C.

UNITED STATES PATENT OFFICE.

DAVID ANDERSON AND DAVID BEVAN, OF DELPHOS, OHIO.

DERAILING DEVICE.

SPECIFICATION forming part of Letters Patent No. 611,548, dated September 27, 1898.

Application filed August 11, 1898. Serial No. 688,375. (No model.)

To all whom it may concern:

Be it known that we, DAVID ANDERSON and DAVID BEVAN, of Delphos, in the county of Allen and State of Ohio, have invented a new and Improved Derailing Device, of which the following is a full, clear, and exact description.

The object of the invention is to provide a new and improved derailing device which is simple and durable in construction and especially designed for conveniently and quickly derailing cars from railroad-tracks whenever desired, the device forming a permanent fixture of the road-bed and being arranged to be thrown out of an active position to allow free and unobstructed passage of the cars on the rails.

The invention consists of novel features and parts and combinations of the same, as will be fully described hereinafter and then pointed out in the claims.

Reference is to be had to the accompanying drawings, forming a part of this specification, in which similar characters of reference indicate corresponding parts in all the figures.

Figure 1 is a plan view of the improvement as applied. Fig. 2 is an enlarged transverse section of the same on the line 2 2 of Fig. 1, and Fig. 3 is a similar view of the same on the line 3 3 of Fig. 1.

The improved derailing device is provided with a base A, adapted to be fastened by ordinary spikes B to one of the railroad-ties C, adjacent to one of the rails D, over which travel the wheels E of the cars. On the base A are erected lugs A′, carrying a pivot-pin F for a projection G′ on a derailing-flange G, adapted to be swung onto the adjacent rail D, as shown in full lines in Fig. 1, or out of engagement with the same, as indicated in dotted lines in Fig. 1. The derailing-flange G is formed at its free end and at the under side thereof with a longitudinally-extending trough G^2, adapted to fit upon the head of the rail, as plainly indicated in Figs. 2 and 3, and on the upper side of said flange is formed a diagonal groove G^3, which begins at the inside of the trough at one end and extends over the trough and terminates at the other end of the flange on the outside of the trough, as will be readily understood by reference to Fig. 1.

At the inside of the groove G^3 is arranged an upwardly-extending flange G^4, thus forming an abutment for the flange of the car-wheel, so that when the latter moves forward in the direction of the arrow a', as shown in Fig. 1, then the flange of the car-wheel moves into the lower end of the groove G^3 and abuts against the abutment G^4, which follows the curvature of the groove G^3, so that the wheel is forced laterally on a further forward movement of the car to finally cause the wheel to run off the derailing-flange at the outer forward end of the groove G^3. The car-wheels thus leave the rails D in a very simple manner and without much shock or jar or spreading of the rails. When the car has been derailed, then the flange G is swung inward completely away from the rail, so as to leave the same totally unobstructed for the proper passage of the following cars.

The derailing-flange G is provided with an apertured lug G^5, adapted to register with a similar lug A^2 on one of the lugs A′ to permit of connecting the lugs G^5 and A^2 with each other by a suitable lock, as indicated in dotted lines in Fig. 2, to prevent unauthorized persons from disarranging the derailing-flange.

Having thus fully described our invention, we claim as new and desire to secure by Letters Patent—

1. A derailing device consisting of a base adapted to be fastened to a railroad-tie, a flange pivotally connected to said base and having its free end formed with a trough arranged to fit down over the head of the rail, the said flange being formed with a diagonal groove commencing at one end at the inside of said trough and below the upper wall of the same and extending over said trough to the outside thereof, and an abutment following the line of said groove on the inside thereof, the upper edge of said abutment being considerably above the upper surface of the free end of the flange above the trough, as and for the purpose set forth.

2. A derailing device consisting of a base adapted to be fastened to a railroad-tie and formed with spaced-apart lugs, and a lug A^2, and a flange pivoted at one end between said lugs and being formed at its free end with a

trough arranged to fit over the head of the rail, a diagonal groove commencing at one end at the inside of said trough and below the upper wall of the same and extending over said trough to the outside thereof, an abutment following the line of said groove on the inside thereof, the upper edge of said abutment being considerably above the upper surface of the free end of the flange above the trough and a lug registering with the lug A^2 when the flange is in position over the rail, the said lugs being adapted to receive a lock, as and for the purpose set forth.

DAVID ANDERSON.
DAVID BEVAN.

Witnesses:
FRANK KOLLSMITH,
ISAAC S. MOORE.