Jan. 20, 1931. J. COYLE 1,789,729

CAN END CUTTING DEVICE

Filed Oct. 13, 1926 3 Sheets-Sheet 1

FIG. 1.

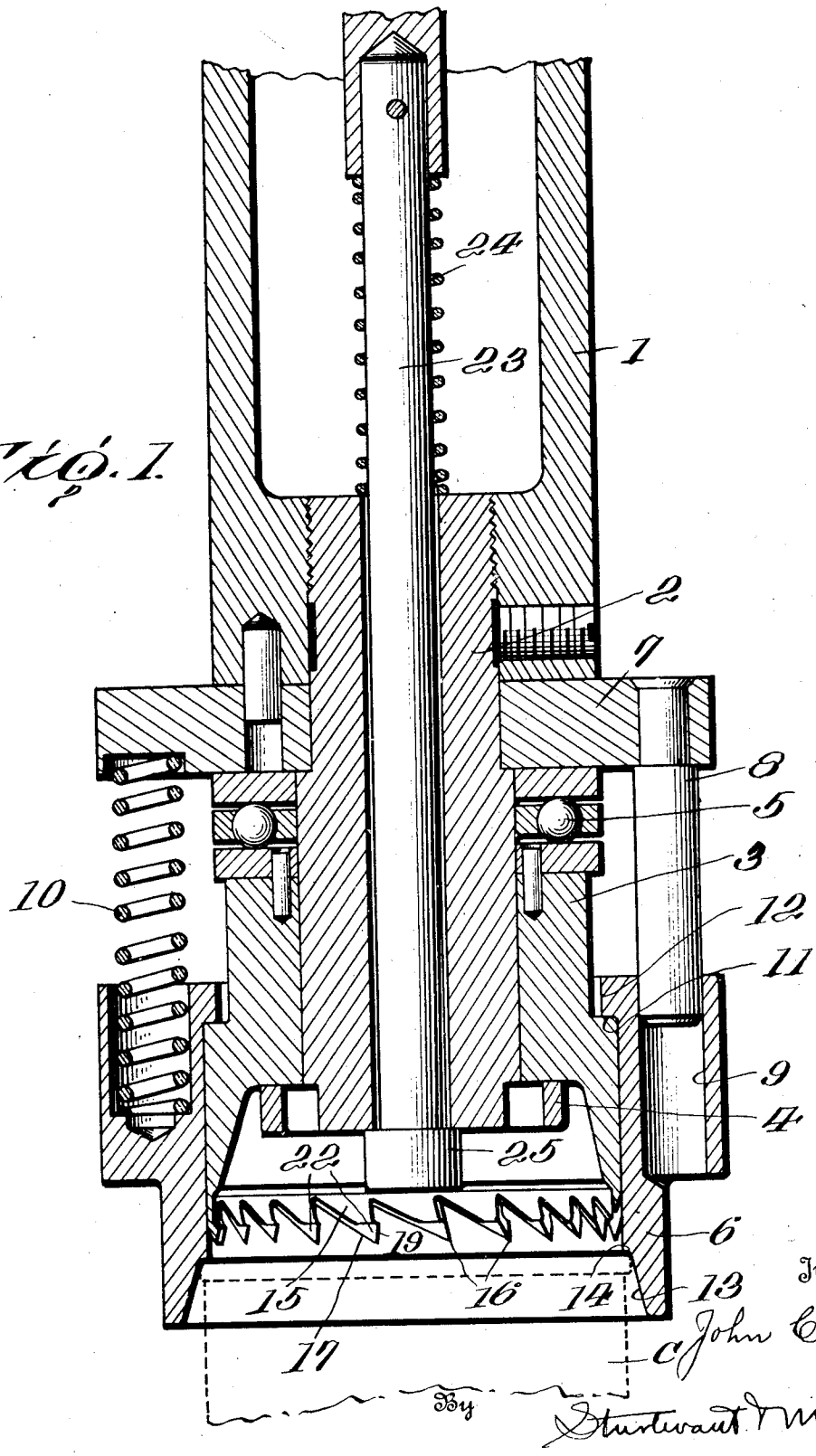

Inventor
John Coyle

By Sturtevant & Mason

Attorneys

Jan. 20, 1931. J. COYLE 1,789,729

CAN END CUTTING DEVICE

Filed Oct. 13, 1926 3 Sheets-Sheet 2

Fig. 2.

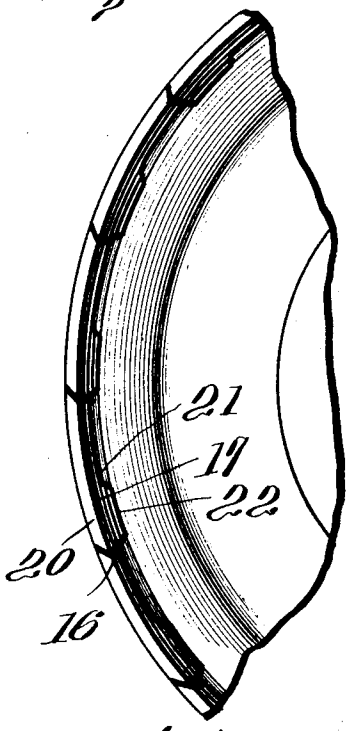

Fig. 3.

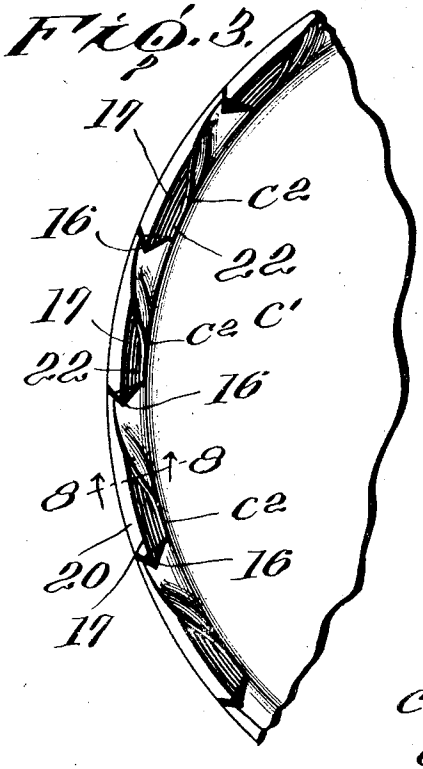

Fig. 4.

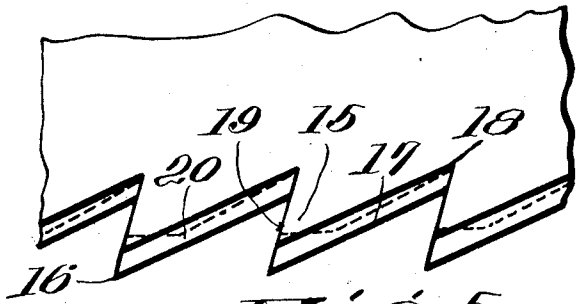

Fig. 5.

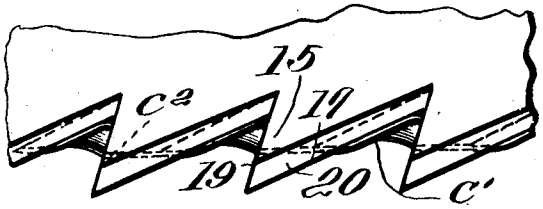

Fig. 6.

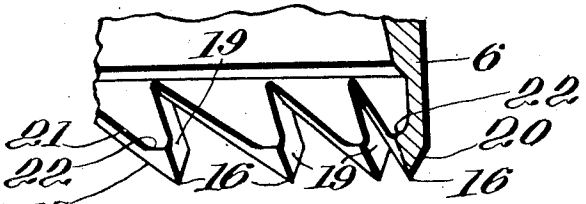

Fig. 7.

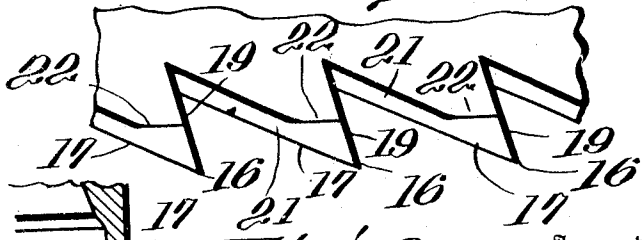

Fig. 8.

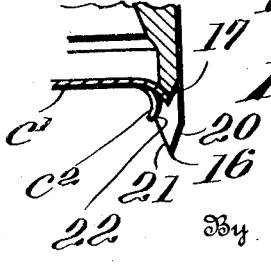

Inventor

John Coyle

By Sturtevant & Mason

Attorneys

Jan. 20, 1931. J. COYLE 1,789,729

CAN END CUTTING DEVICE

Filed Oct. 13, 1926 3 Sheets-Sheet 3

FIG. 9.

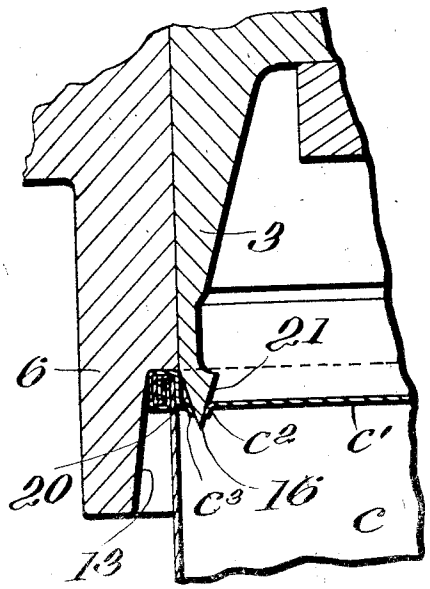

FIG. 11.

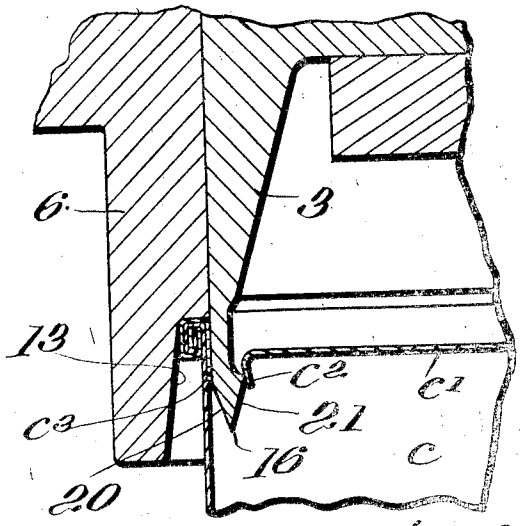

FIG. 10.

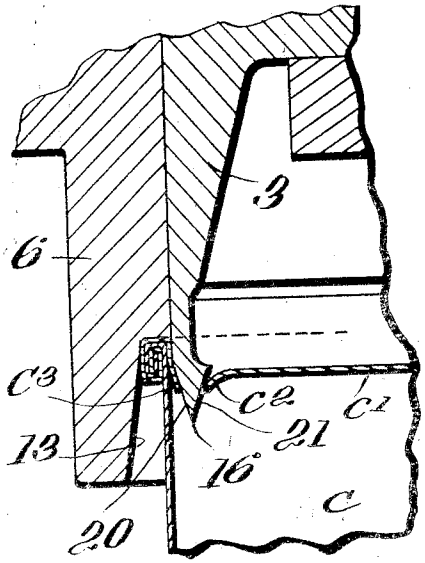

FIG. 12.

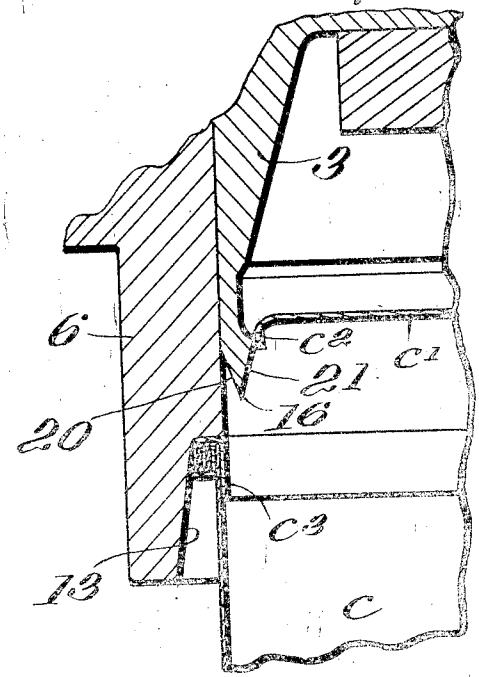

Inventor

John Coyle

By Stewart & Mason

Attorneys

Patented Jan. 20, 1931 1,789,729

UNITED STATES PATENT OFFICE

JOHN COYLE, OF BALTIMORE, MARYLAND, ASSIGNOR TO CONTINENTAL CAN COMPANY, INC., OF NEW YORK, N. Y., A CORPORATION OF NEW YORK

CAN-END-CUTTING DEVICE

Application filed October 13, 1926. Serial No. 141,326.

The invention relates to new and useful improvements in can end cutting devices, and more particularly to a can end cutting device wherein the entire portion of the end to be removed is severed in one operation of the device.

An object of the invention is to provide a can end cutting device of the above type which is so constructed that the portion of the metal cut from the end in the opening of the can is retained by the cutter head and lifted from the can when the head is retracted.

A further object of the invention is to provide a can end cutting device of the above type wherein said cutter head also turns the portion of the end left intact with the can when the end is cut, downwardly into the can body, causing the same to lay flat against the inner wall of the can body.

These and other objects will in part be obvious and will in part be hereinafter more fully disclosed.

In the drawings which show by way of illustration one embodiment of the invention—

Figure 1 is a sectional view through a cutter head embodying the improvements and showing the can to be opened as positioned by the head ready to receive the cutter;

Fig. 2 is a bottom plan view of a portion of the cutter head;

Fig. 3 is a view similar to Fig. 2, but showing the metal cut from the can end as held by the cutter head;

Fig. 4 is an enlarged side view of a portion of the cutter head;

Fig. 5 is a view similar to Fig. 4, but showing a portion of metal cut from the can as held by the cutter head;

Fig. 6 is a sectional view of a portion of the cutter head showing the construction of the inner side of the cutting teeth;

Fig. 7 is a diagrammatic view on an enlarged scale of the inside of the cutting teeth;

Fig. 8 is a sectional view on the line 8—8 of Fig. 3;

Fig. 9 is a view showing the cutter head as the teeth of the cutter head begin to break through the can end;

Fig. 10 is a view similar to Fig. 9, but showing the teeth as having passed further through the end of the can, and the beginning of the ironing down of the portion of the metal left intact with the can;

Fig. 11 is a view similar to Fig. 10, but showing the metal entirely severed from the can end, and the cutout portion supported by the cutter head so as to be lifted from the can, and

Fig. 12 is a view showing the cutter head as retracted.

The invention is directed broadly to a can end cutter which is adapted to sever a large portion of the end of a can for the opening of the can. This is accomplished by a cutter head which is moved up and down, either by hand power or by driven power. The can to be opened is placed on a suitable support, and the head is provided with a tapered ring for centering the can so that the cutter head will engage the end to be opened on a line concentric with the center of the can. The size of the cutter head is such that a greater portion of the metal constituting the can end is severed. This cutter head is mounted so that it may revolve freely on the part which moves up and down. The cutter head is provided with a series of teeth which are spaced around the periphery of the cutter head. Each tooth is provided with a point at one side of the tooth, and the extreme lower edge of the cutting tooth inclines from this cutting point upwardly to the base of the next adjacent tooth. The wall of the tooth between the point and the base of the next adjacent tooth on the side of the tooth opposite this inclined portion, is likewise inclined slightly to the vertical, so that the point of one tooth overhangs the base of the next adjacent tooth. The side faces of the tooth are inclined away from the central cutting edge extending from the point of the tooth to the base thereof. The outer inclined face operates primarily to fold and smooth down the metal which is left intact with the can body when a can end is severed. The inner tapered face of the tooth is for the purpose of cutting the metal at a slight distance from the inner face of the cutting tooth. The cutting tooth

immediately adjacent the cutting point has a slight inwardly projecting shoulder. The inclined edges of the teeth as the end is being cut, will cause the head to rotate, and this in turn will cause the rolled portion of the severed metal in the part cut out to be drawn underneath the projections on the tooth so that the cut out portion is sustained by the cutting head, and when the cutting head is withdrawn from the can, the cut out portion will be lifted from the open can.

Referring more in detail to the drawings, the improved can opening device consists of a head portion 1 which is adapted to be reciprocated in a vertical direction. This, as noted above, may be brought about by a hand lever, a rotating shaft, or any other suitable operating means, either hand driven or power driven. Threaded into this head portion 1 is a sleeve 2, and mounted on the lower end of this sleeve 2 is a cutter head 3. Said cutter head is held on the sleeve by a securing device 4. At the upper end of this cutter head 3 there is a ball bearing including balls 5 and suitable co-operating bearing plates. The cutter head 3 is capable of free rotation on the sleeve 2, and the ball bearing is for the purpose of enabling the cutter head to rotate freely when it is thrust downwardly on to the can end for cutting the same. The rotation of this cutter head is only through a small angle, and is brought about by the action of the cutting teeth on the metal, as will be hereinafter more fully described. Surrounding the cutter head 3 is a tapered ring 6 which is adapted to slide vertically relative to the head portion 1 and also relative to the cutter head 3. This is accomplished by providing the head portion 1 with a supporting disk 7 on which are mounted a series of rods 8. These rods extend into suitable openings 9 in the tapered sleeve 6 and the tapered sleeve can move freely on the rods. Springs 10 engaging the supporting disk 7 and the tapered sleeve 6, operate to force the tapered sleeve downwardly to the limit of its movement. A shoulder 11 on the cutter head is engaged by a ledge 12 on the tapered sleeve 6, and limits the downward movement of this sleeve. This sleeve 6 has been referred to as a tapered sleeve, which is adapted to receive the end of the can indicated at C in Fig. 1, which is to be opened. The end of the can is seated against a shoulder 14, and when so seated, it is centered relative to the cutter head 3.

This cutter head 3 is provided with a series of teeth, which in general terms, may be stated to be somewhat similar to saw teeth. The teeth are all alike in construction, and a description of one will answer for the others. The teeth are indicated at 15 in the drawings. Each tooth has a penetrating point 16, and an inclined cutting edge 17 which extends from the tapered point 16 to the base 18 of the next adjacent tooth. The other edge 19 of the cutting tooth is inclined slightly to the vertical, so that the point 16 overhangs the base of the tooth. Each tooth has an inclined face 20 extending from the cutting edge 17 upwardly and outwardly to the outer face of the cutter head. Each tooth also has an inclined face 21 extending inwardly and upwardly from the cutting edge 17 to the extreme inner face of the cutting tooth. Each tooth is provided with an inwardly projecting portion 22 adjacent and immediately above the cutting point 16 on the inner face of the tooth.

In Fig. 9 of the drawings, the can C is shown as centered by the tapered sleeve 6 and the cutter head 3 is moved down sufficiently so that the cutting point 16 of the cutting teeth has penetrated the end C′ of the can. It will be noted that the tapered side faces 20 and 21 of the cutting teeth have rolled down to a slight extent the edges of the metal, so far as the cutting teeth have penetrated the metal.

In Fig. 10, the cutting teeth are moved down a still further distance into the can, and the cutting of the can end which began with the point of each tooth has progressed along the inclined cutting edge 17 for a slight distance. Inasmuch as the point 16 overhangs the face 19 of the cutting tooth, and the cutting edge 17 is inclined, the cutter head will be rotated to a slight extent as each cutting tooth passes down through the metal.

In Fig. 11 of the drawings, the cutter head is moved down to its extreme lower position, and the metal in the end of the can which is to form the opening leading into the can, is entirely severed. In other words, the line of cutting of one tooth has progressed until it has run into the line of cutting of the next adjacent tooth. While the cutter head has rotated to a slight degree, the portion of the metal which is finally severed from the can end, does not rotate, and therefore, the cutter head has a slight rotating movement relative to the portion of metal which is finally cut out of the can end. As has been noted above, each cutting tooth adjacent its point, has an inwardly projecting shoulder. The rotation of the head will cause the first portion of the can end cut by the tooth to pass above this shoulder on the tooth, so that the cut out portion is retained by the cutter head and can be lifted from the can by the retracting movement of the cutter head.

In Fig. 8 of the drawings, which is a sectional view on the line 8—8 of Fig. 3, the part 16′ of the tooth in rear of the section line is indicated, and the position of the cut portion of the can end relative to the shoulder on this tooth, shown. The portion C^2 of the can end which is first severed by the part 16′ of the cutting tooth is curled inwardly slightly, and when the head rotates, this por-

tion C^2 will be placed directly over the shoulder 22, and thus it is that the end is secured to the cutter head so that it may be lifted when the head is retracted.

In Fig. 12 of the drawings, the cutter head is shown as retracted and as lifting the cut out portion from the can. The portion C^3 of the metal of the can end which remains intact with the can has been ironed or smoothed down flat against the wall of the body portion of the can.

Associated with the head portion 1 is a rod 23 which is capable of movement in the supporting sleeve 2. A spring 24 holds this rod raised, and a head 25 on the rod engaging the end of the sleeve limits its upward movement. This rod is moved downward relative to the cutting head at the proper time for ejecting or dislodging the metal cut out from the can end by the cutter head. Only a slight pressure is necessary for the ejector rod to disconnect the metal from the cutter head.

The operation of my device will be apparent from the description which has already been given. The can end cutting device is either moved down on to the can or the can up into the device, and the tapered ring centers the can relative to the cutter head. The teeth on the cutter head will pierce the metal at spaced intervals, the point 16 of each tooth first cutting its way through the metal, and the metal will be cut between the punctures progressively as the cutter head moves down into the can, due to the fact that the cutting edge of each tooth is inclined. This inclination of the cutting face of the tooth causes a pressure to be exerted upon the cutter head so that it will turn slightly about its central axis, and the undercut portion of each tooth on tie side of the tooth opposite from the inclined cutting face, permits this rotative movement of the cutter head. The tapered faces of each cutting tooth will fold the metal downwardly and the cutter head will smooth the metal which is left intact on the can end. The metal of the portion cut out will be rolled downwardly also, and during the turning of the cutter head, will be positioned above the shoulder adjacent the cutting point of each tooth, and thus it is that the metal which is cut out is retained by the cutter head, so that it may be lifted from the can. After the cut out portion has been lifted from the can, and the can removed from the can end cutting device, then the ejector rod operates to strip the cut out portion of metal from the cutter head so that the device is ready for opening another can.

It is obvious that minor changes in the details of construction may be made without departing from the spirit of the invention as set forth in the appended claims.

Having thus described the invention, what I claim as new and desire to secure by Letters Patent, is:—

1. A can end cutting device comprising a support, a cutter head mounted on said support for free rotation, said cutter head having spaced teeth formed with inclined cutting edges terminating in downwardly projecting points, each tooth adjacent its point having an inwardly projecting shoulder, said inclined cutting edge operating to rotate the head as the can end is cut therefrom so as to place said projecting shoulder beneath a portion of the end being cut for sustaining and lifting the same when the cutter head is removed from the can.

2. A can end cutting device comprising a support, a cutter head mounted on said support for free rotation, said cutter head having spaced teeth formed with inclined cutting edges terminating in downwardly projecting points, each tooth adjacent its point having an inwardly projecting shoulder, said inclined cutting edge operating to rotate the head as the can end is cut therefrom so as to place said projecting shoulder beneath a portion of the end being cut for sustaining and lifting the same when the cutter head is removed from the can, said cutter head having its outer face substantially cylindrical whereby the portion of the end remaining intact with the can is turned down into contact with the inner wall of the can body.

3. A can end cutting device comprising a support, a cutter head mounted on said support for free rotation, said cutter head having spaced teeth formed with inclined cutting edges terminating in downwardly projecting points, each tooth adjacent its point having an inwardly projecting shoulder, said inclined cutting edge operating to rotate the head as the can end is cut therefrom so as to place said projecting shoulder beneath a portion of the end being cut for sustaining and lifting the same when the cutter head is removed from the can, and means cooperating with said cutter head for stripping the cut out portion from the head after the same has been lifted from the can.

4. A can end cutting device comprising a support, a cutter head mounted on said support for free rotation, said cutter head having spaced cutting teeth disposed circumferentially of the head, each tooth being provided with a cutting point and an inclined cutting edge leading to the base of the next adjacent tooth, the other edge of the tooth leading to the base of the next adjacent tooth on the other side thereof being undercut so that the head will be rotated to a slight extent as the teeth penetrate the metal, each tooth having adjacent its point an inwardly projecting shoulder, said inclined cutting edge operating to rotate the head as the can end is cut therefrom so as to place said projecting shoulder beneath a portion of the end

being cut for sustaining and lifting the same when the cutter head is removed from the can.

5. A can end cutting device comprising a support, a cutter head mounted on said support for free rotation, said cutter head having spaced cutting teeth disposed circumferentially of the head, each tooth being provided with a cutting point and an inclined cutting edge leading to the base of the next adjacent tooth, the other edge of the tooth leading to the base of the next adjacent tooth on the other side thereof being undercut so that the head will be rotated to a slight extent as the teeth penetrate the metal, each tooth having adjacent its point an inwardly projecting shoulder, said inclined cutting edge operating to rotate the head as the can end is cut therefrom so as to place said projecting shoulder beneath a portion of the end being cut for sustaining and lifting the same when the cutter head is removed from the can, and means associated with said cutter head for centering the can relative to the cutter head.

In testimony whereof, I affix my signature.

JOHN COYLE.