Sept. 3, 1940. P. J. GILINSON 2,213,493

SIGNALING DEVICE

Filed Oct. 3, 1936

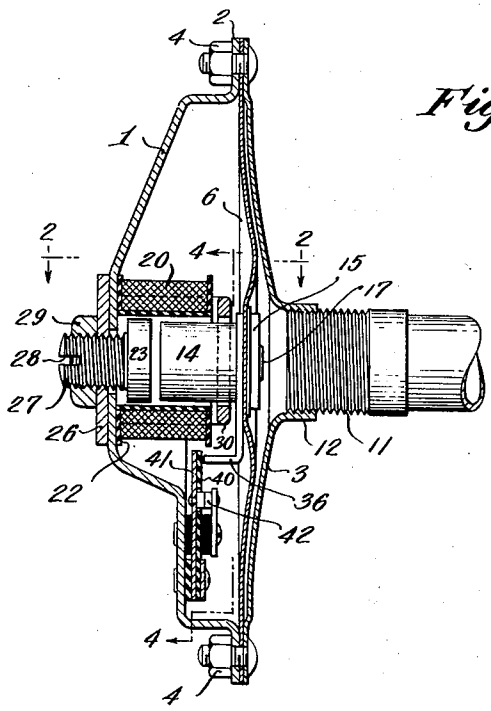

Fig. 1.

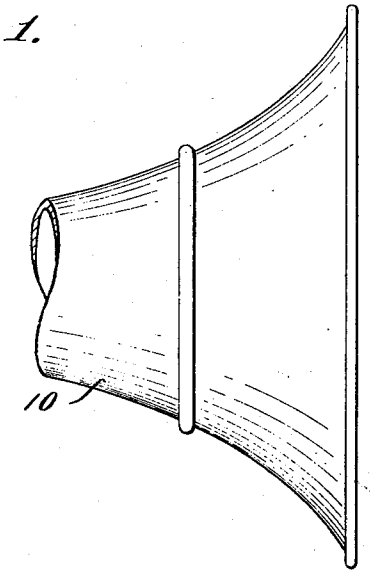

Fig. 4.

Fig. 2.

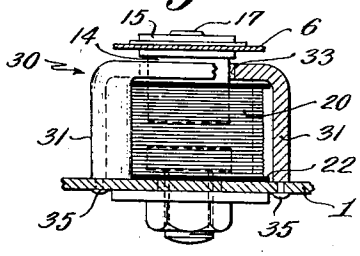

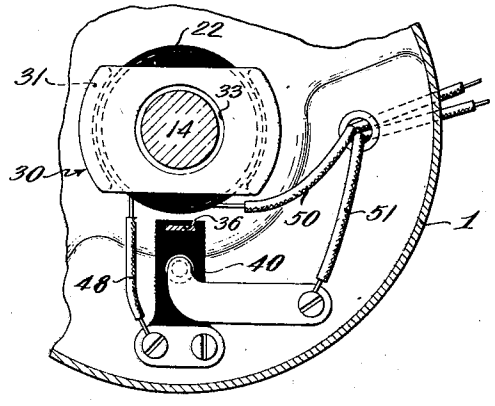

Fig. 3.

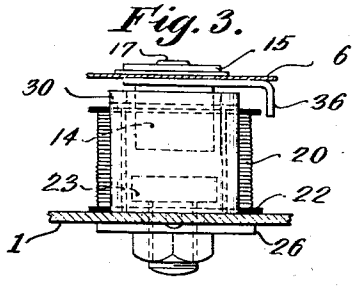

Inventor,
Philip J. Gilinson,
by Roberts, Cushman & Woodberry
Attys.

Patented Sept. 3, 1940

2,213,493

UNITED STATES PATENT OFFICE

2,213,493

SIGNALING DEVICE

Philip J. Gilinson, Lowell, Mass., assignor to Heinze Electric Company, Lowell, Mass., a corporation of Maine

Application October 3, 1936, Serial No. 103,842

1 Claim. (Cl. 177—7)

This invention relates to improved electric signaling devices on horns of the type wherein a diaphragm is vibrated by electromagnetic means energized, for example, through a make-and-break mechanism. The present invention more particularly provides an especially advantageous arrangement of the magnetic assembly permitting efficient operation of the horn to give a relatively loud sound in response to energization by a moderate electric current. The arrangement also permits inexpensive manufacture and assembly so that especial care and accuracy is not required in order to have the parts of the horn operate efficiently.

To permit these desirable results the magnetic assembly preferably partakes of the characteristics of both a conventional electromagnet and of a solenoid. Thus, a magnetic coil is provided with a core member disposed in one end. A plunger connected to the vibratory diaphragm extends into the other end of the coil and has an end juxtaposed to the end of the core member. Accordingly when the coil is energized the plunger is drawn toward the core member both due to the attraction of the plunger to the coil and the attraction of the plunger to the core member. Such an arrangement avoids a tendency toward tilting which may sometimes occur with the conventional armature type magnet, when associated with an armature at the center of a relatively large diametered flexible diaphragm. Such tilting of the armature and the central portion of the diaphragm results in an uneven vibratory action and a loss in operating efficiency, and in many cases also results in a disagreeable note. The arrangement of the plunger in the manner permitted by this invention permits the amplitude of vibration of the center of the diaphragm to be relatively large, since the plunger may have a relatively long path of movement due to the solenoid action, and since the core member affords an increasing attraction for the plunger at the inner end of its path. Thus at the beginning of the inward movement of the plunger a substantial fraction of the total attracting force comes directly from the coil itself, but, as the resistance to further distortion of the diaphragm increases, the end of the plunger approaches the end of the core member and the latter becomes increasingly effective in attracting the plunger. The solenoid effect results in proper centering of the plunger so that tilting of the diaphragm is avoided and it may have the full desired amplitude of movement without objectionable distortion.

Further features of the invention relate the arrangement of the component parts of the assembly to permit inexpensive manufacture of an efficient warning signal.

In the accompanying drawing

Fig. 1 is a broken sectional view of a signaling device constructed in accordance with this invention, parts being shown in elevation;

Fig. 2 is a sectional detail indicated by line 2—2 of Fig. 1;

Fig. 3 is an elevational detail of the assembly shown in Fig. 2, parts being shown in section; and

Fig. 4 is a section indicated by line 4—4 of Fig. 1.

A signaling device constructed in accordance with this invention may comprise a casing member 1 of generally cup-like form having a peripheral flange 2 connected to the flange of a front casing member 3 by fastening means such as bolts 4. The edge of a metal diaphragm 6 is secured between the flanges of the casing members 1 and 3, as shown in Fig. 1. A sound duct 10 has a threaded end portion 11 received in an internally threaded boss 12 at the center of the front casing member 3.

A plunger 14 is fixed to the intermediate part of the diaphragm 6. For this purpose a disk 15 may be disposed at the front of the diaphragm and a stud 17 may extend from the plunger 14 through an opening in this disk and be peened over to secure these parts to the central portion of the diaphragm. A suitable wire coil 20 is disposed about the major portion of the plunger 14 with the plunger preferably extending substantially to or beyond the mid portion of this coil. Such a coil may be conveniently wound on an insulating assembly in the form of a spool or bobbin 22. The latter is secured, in a manner presently to be described, to the central portion of the rear casing member 1 so that the coil is fixedly mounted on this casing member.

A core member 23 is secured to the center of the casing 1 and extends into the rear part of the coil, having an end face spaced from the inner end of the plunger 14, as shown in Fig. 1. The core member 23 is normally fixed, but may be adjustable to permit convenient adjustment of the horn from the exterior thereof. For this purpose a reinforcing disk 26 is welded to the outer face of the central portion of the casing member 1, and is provided with a threaded opening to receive a stud 27 extending rearwardly from the core member 23. The end of the stud 27 is slotted as designated by numeral 28 to receive

the end of a screw driver, and the stud engages a locking nut 29 which normally is held against the outer face of the disk 26. When it is desired to adjust the member 23, the stud 27 is held against rotation by a screw driver, and the nut 29 is loosened, permitting the stud to be screwed inwardly or outwardly, thus allowing the spacing of the plunger and core member to be varied. When the desired setting of the core member has been attained, the nut 29 is tightened to hold the assembly in fixed position.

A magnet frame 30 is disposed about the coil 20, this frame being of generally U-shaped form, as shown in Fig. 2, but having curved legs 31, Fig. 4, juxtaposed to opposite sides of the coil. The bight portion of this member is provided with a central opening 33 through which the plunger 14 extends. The end portions of the legs of this member may be provided with integral extensions 35 which extend through openings in the casing member 1 and are peened in place so that the frame 30 is permanently secured to the casing. The frame 30 preferably engages the inner end of the insulating bobbin 22, as shown in Fig. 2, holding the opposite end thereof against the casing, thus being effective in supporting the bobbin and the wire coil in proper position without the necessity for employing separate fastening means. Obviously the frame 30 cooperates with the casing, the plunger, the core member and the coil in aiding the provision of an effective magnet circuit.

The magnetic coil 20 may be energized by any suitable means through a conventional make-and-break mechanism. For example, as shown, a strap metal piece 36 may be clamped between the plunger 14 and the diaphragm 6, this member being L-shaped as viewed in Fig. 1 and having an end portion engaging the insulating leaf 40 of the make-and-break arm 41, which carries a movable contact engageable with a fixed contact 42 of the opposite side of the make-and-break assembly. Arm 41 is connected by a lead 48 to coil 20 while the opposite end of the coil and the contact 42 are connected respectively to supply leads 50 and 51.

Obviously when the circuit is closed between the supply leads 50 and 51, current is supplied to the coil 20 and the plunger 14 is drawn rearwardly. Thus a relatively long vibratory path is imposed upon the diaphragm, while the centering action of the coil upon the plunger prevents tilting of the diaphragm so that the device tends to be automatically self-centering and especial care in assembly is not necessary. Furthermore, the space between the plunger 14 and the wall of the opening 33 in the magnet frame 30 affords a definite air gap of uniform non-changing size in the magnet circuit. Such an air gap is advantageous in avoiding the lag in the movement of the diaphragm which occurs in many conventional horns at the end of the inward movement of the armature toward the magnet due to the extremely minute air gap which may then be provided in such horns. Obviously when the plunger 14 closely approaches the core member 23 the part 36 is effective in separating the contacts so that the electrical circuit is broken and the diaphragm moves back toward its normal position, whereupon the contacts again engage and the vibratory movement is repeated.

The make-and-break mechanism obviously may be adjustable in any suitable manner, for example, the arm 41 or the opposite arm of the make-and-break mechanism may be bent slightly to vary the point in the vibratory path of the diaphragm at which the contacts are separated. Moreover, it is obvious that known arrangements of the make-and-break mechanism may be provided so that the same may be adjustable from the outside of the casing; the example, one arm of the mechanism might be made adjustable through a suitable insulated screw extending through the wall of the casing.

A very effective adjustment is provided, however, by the arrangement of the plunger and core member so that the space between the ends of the same may be varied from the exterior of the horn. Such an adjustment permits the spacing of their parts to be varied until the maximum volume is attained at the position of adjustment wherein the plunger very closely approaches the core member at the inner end of its stroke. Obviously the principles of this invention may be employed to obtain this advantage if the plunger is adjustably mounted on the diaphragm in the same general manner as the core member is adjustably mounted on the casing in the illustrated form of the invention, but in practice it is preferable to arrange the lighter and smaller core member with an adjustable connection to the fixed casing. Obviously this core member is readily adjusted from the back of the casing either when the horn is being initially tested directly after assembling, or when the horn is actually in operation on a vehicle or the like. This adjustment requires only the movement of the small core member 23, while the magnetic coil 20 remains permanently fixed to the casing, thus affording an unusually sturdy arrangement which is not likely to loosen when subjected to vibration.

It is evident that the arrangement disclosed herein permits a signaling device of the type described to be manufactured and assembled at very low cost, while affording a device which provides a clear tone that has previously only characterized more expensive devices with more elaborate assemblies which were more likely to get out of order.

It should be understood that the present disclosure is for the purpose of illustration only and that this invention includes all modifications and equivalents which fall within the scope of the appended claim.

I claim:

In an electric horn of the vibrator type, a solenoid, a first member extending across and in contact with one end of said solenoid, and a second member extending across and in contact with the other end of said solenoid and along the sides of said solenoid and secured to said first member and being generally of a U-shape, said members forming both a means for clamping said solenoid tightly in a fixed position and a path for lines of magnetic flux produced by said solenoid, said U member having the ends of its legs secured by fastening means to said first member for holding the solenoid in place and for securing the members together in a common magnetic circuit.

PHILIP J. GILINSON.