Nov. 28, 1939. A. B. DOW 2,181,451

STRUCTURAL FACING UNIT

Filed April 19, 1938

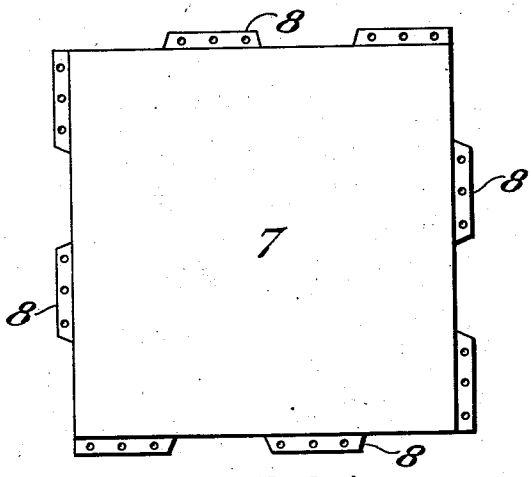

FIG. 1

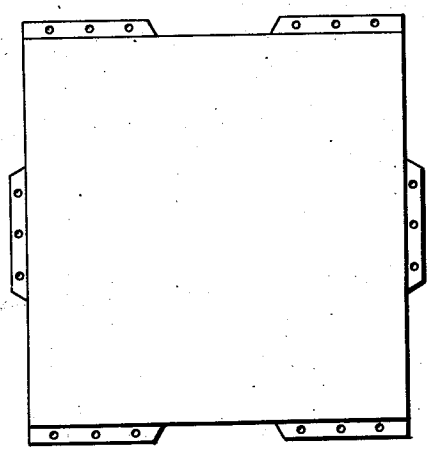

FIG. 2

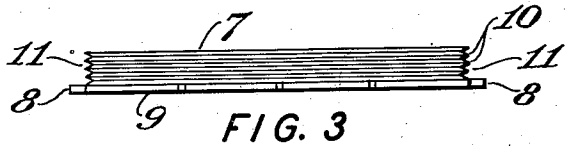

FIG. 3

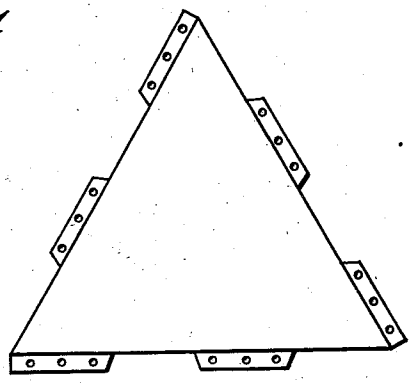

FIG. 4

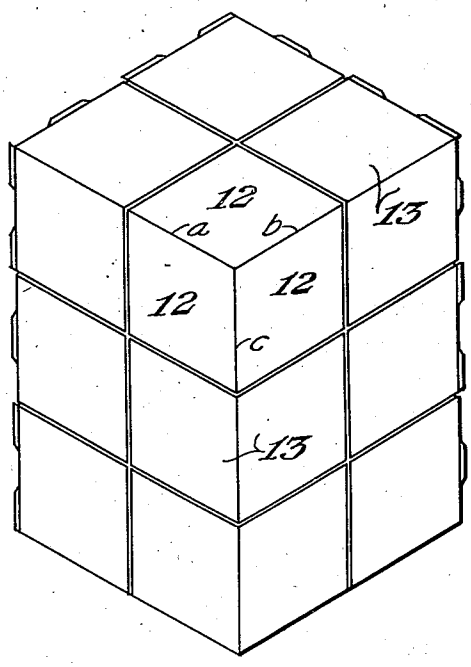

FIG. 5

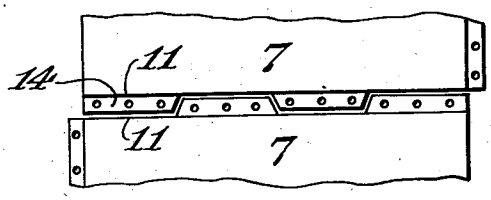

FIG. 6

INVENTOR
Alden B. Dow

BY

Dean Lawrence
ATTORNEY

Patented Nov. 28, 1939 2,181,451

UNITED STATES PATENT OFFICE

2,181,451

STRUCTURAL FACING UNIT

Alden B. Dow, Midland, Mich.

Application April 19, 1938, Serial No. 202,955

3 Claims. (Cl. 72—19)

This invention relates to structural facing units.

It is a primary object of this invention to provide a facing unit adapted to inter-fit with other like units without any overlapping of said units and in such manner that backed-up grooves adapted to receive a plastic material are formed around said units.

Another object is to provide a structural unit which can be employed for facing inside walls, ceilings, and the like, and as an exterior covering for buildings, including roofs.

To the accomplishment of the foregoing and related ends the invention then consists in the structural unit hereinafter described and more particularly pointed out in the claims.

In the drawing:

Figure 1 is a plan view illustrating one form of my invention.

Figure 2 is a plan view illustrating another form of my invention.

Figure 3 is an end elevation of the structural unit shown in Figure 1.

Figure 4 is a plan view illustrating another form of my invention.

Figure 5 is an isometric exterior view of a corner assembly of the form of unit illustrated in Figure 2.

Figure 6 is a plan view illustrating the inter-fitting feature of my facing unit employing the form shown in Figures 1 and 3.

My invention comprises a facing unit presenting an exposed face which has basically the form of a square or of an equilateral triangle. This unit is provided on its perimeter with ears of equal length, spaced apart on said perimeter a distance equal to the length of said ears; and the number of said ears is equal to the number of spaces on said perimeter. Such ears are located on the edges of the unit at the back of said edges with respect to the exposed face of the panel. In order that the units may inter-fit one with the other, an end of at least one of said ears must be substantially aligned with the adjacent edge of the panel. The ears are preferably drilled or otherwise provided with openings prior to being used to provide for the nailing, screwing, or otherwise fastening of the panels to the surface or framework to be covered.

The units may be formed from metal, clay, or glass, although we prefer to employ a panel molded of ethyl cellulose, polymeric styrene, polymeric vinyl chloride, or the like. Various plastic materials may be employed for filling the channels surrounding the panels, it being desirable that the material retain some elasticity after it has been placed in the channels. A suitable composition for use with panels formed from plastic materials may be prepared in the following manner: A vehicle may include 18 per cent by weight of ethyl cellulose, 7 per cent of mineral spirits, and 75 per cent of an oil such as soy-bean oil. The pigment may include 50 per cent by weight of asbestos fiber, 30 per cent of diatomaceous earth, and 20 per cent of a color such as chrome yellow. The vehicle and the pigment are then mixed in the proportion of 100 parts by weight of vehicle to each 70 parts of pigment, to form a desirable filler for the backed-up grooves around the panel unit.

Referring now to Figure 1, the exposed face 7 of the panel may be a plain surface or it may be provided with designs by embossing or other suitable procedure. The ears 8 are equally spaced on the perimeter of the face 7, the distance between each of said ears on said perimeter being approximately equal to the length of an ear.

Figure 2 shows a different arrangement of ears on the perimeter of a square panel, as illustrated in Figure 1, which also embodies the inter-fitting feature of my invention.

Figure 3, which is an edge elevation of the panel unit shown in Figure 1, shows primarily that the ears 8 are located toward the back face 9 of the panel. This figure shows also the serrations 10 on the edges 11 of the panel, which are preferably, although not necessarily employed to provide a better grip for the plastic composition employed to fill the channels between adjacent units.

Figure 4 shows the arrangement of ears and spaces which may be employed on a structural unit in the shape of a triangle, in accordance with my invention. It is noted that when a triangle is the basic form of the panel, then there must always be the same number of ears as there are spaces on each side of the triangle, otherwise, the inter-fitting feature of my invention is lost.

Figure 5 shows a corner assembly including units with the arrangement of ears shown in Figure 2. There is also shown a corner unit 12, which is formed from three panels of the type shown in Figure 2, welded or cast together along the edges *a*, *b*, and *c*, the other edges being provided with ears in the usual arrangement. This figure also shows corner units 13, formed by welding two of the regular Figure 2 type units along one edge.

Figure 6 illustrates the inter-fitting between the ears of two of the panels with the arrangement

of ears shown in Figure 1. It is in this manner that a backed-up groove 14 is formed between the edges 11 of adjacent panel units.

It is within the scope of my invention to combine the units illustrated in the drawing to produce units of other regular configurations which can be employed in facing walls and the like. For example, the square units illustrated in Figures 1 and 2 may be welded along one edge to produce units of rectangular shape having a ratio of width to height of 2 to 1. The equilateral triangle illustrated in Figure 4 can be welded to other similar units to produce composite units in the shape of diamonds and hexagons. In the latter instance it will be necessary to form or cut special units at the corners of walls, or around openings in walls, since panels in the shape of diamonds or hexagons cannot be attached to walls so that a straight edge can be obtained.

I claim:

1. A structural facing unit having an exposed face with a configuration selected from the group consisting of squares, equilateral triangles, and regular combinations of said figures, provided on its edges with ears of equal length spaced apart on the perimeter of said unit a distance substantially equal to the length of each of said ears, the number of said ears being equal to the number of spaces on said perimeter, said ears having a thickness less than the thickness of said unit, and being situated at the back of said edges with respect to the exposed face of said unit, and an end of one of said ears on one of said edges being substantially aligned with the adjacent edge of said unit.

2. A structural unit presenting a substantially square exposed face, provided on its edges with ears of equal length spaced apart on the perimeter of said unit a distance substantially equal to the length of each of said ears, the number of said ears being equal to the number of spaces on said perimeter, said ears having a thickness less than the thickness of said unit, and being situated at the back of said edges with respect to the exposed face of said unit, and an end of one of said ears on one of said edges being substantially aligned with the adjacent edge of said unit.

3. A structural unit presenting an exposed face in the shape of an equilateral triangle, provided on its edges with ears of equal length spaced apart on the perimeter of said unit a distance substantially equal to the length of each of said ears, the number of said ears being equal to the number of spaces on said perimeter, said ears having a thickness less than the thickness of said unit, and being situated at the back of said edges with respect to the exposed face of said unit, and an end of one of said ears on one of said edges being substantially aligned with the adjacent edge of said unit.

ALDEN B. DOW.