M. KONDOLF.

MALT STIRRER.

APPLICATION FILED JULY 25, 1908.

942,649.

Patented Dec. 7, 1909.

4 SHEETS—SHEET 1.

FIG. 1.

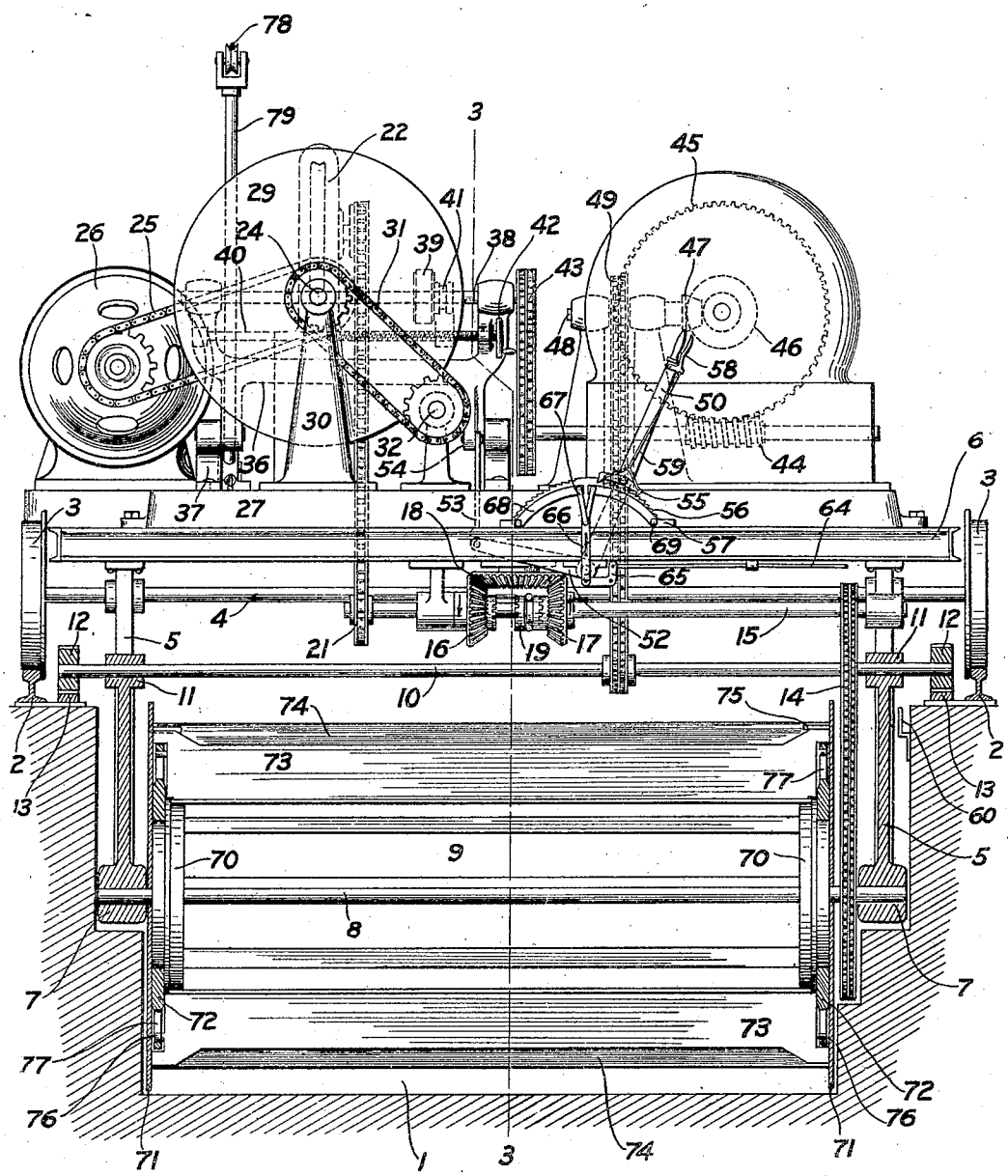

WITNESSES:

D. Gurnee

L. Thon

INVENTOR:

Mathias Kondolf

by Oxford & Davis

his Attys

M. KONDOLF.

MALT STIRRER.

APPLICATION FILED JULY 25, 1908.

942,649.

Patented Dec. 7, 1909.

4 SHEETS—SHEET 2.

FIG.2.

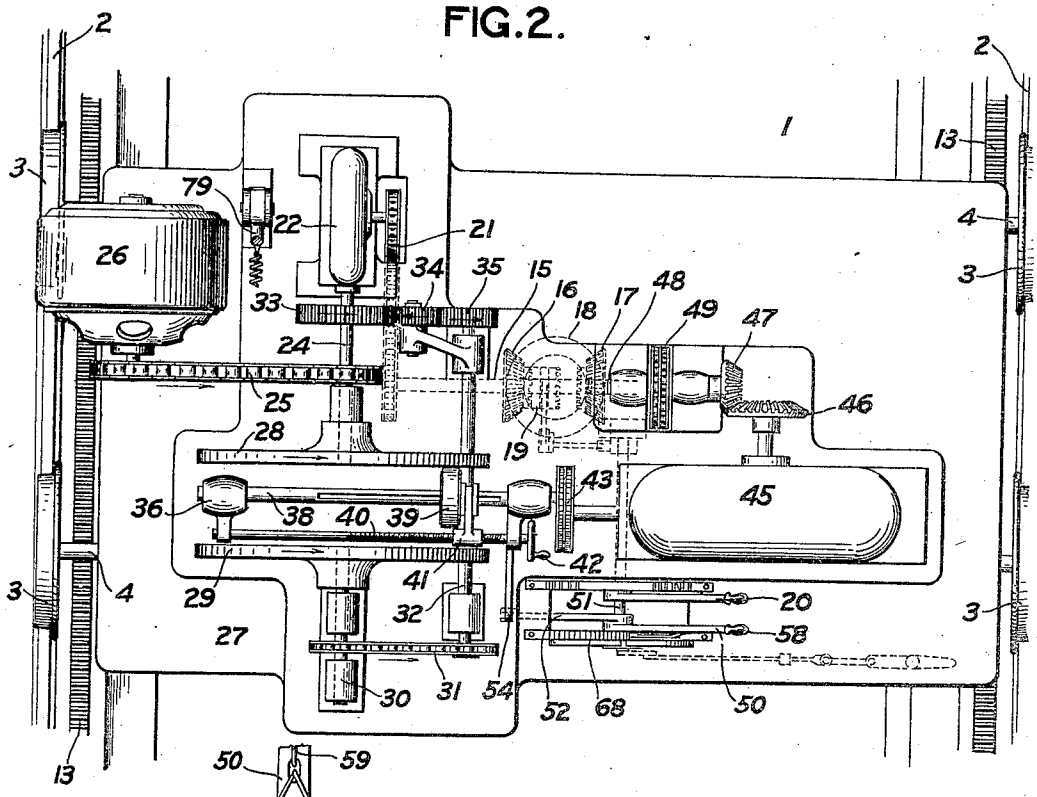

FIG.4.

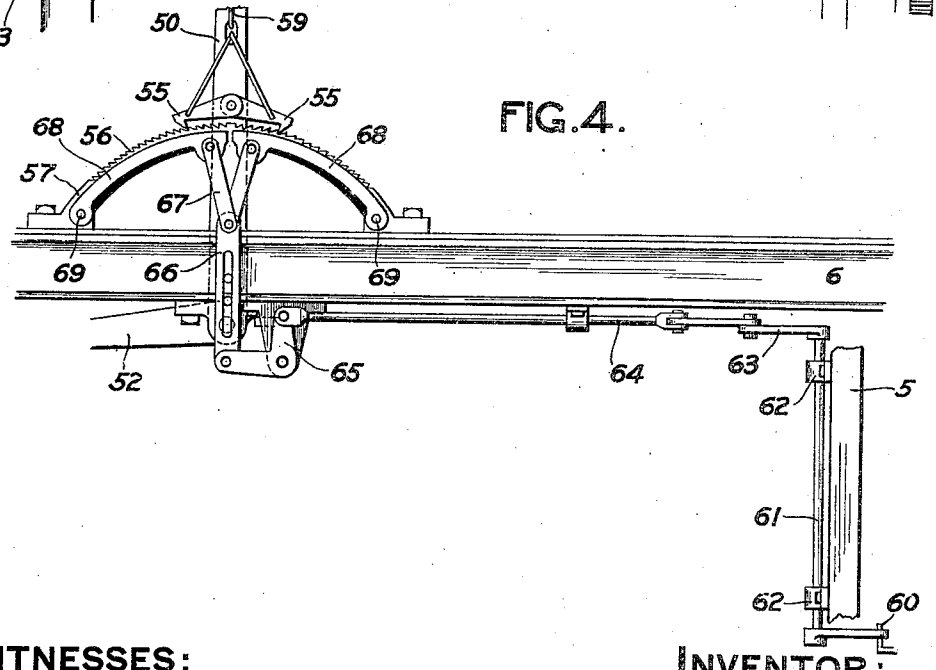

WITNESSES:

W. Gurnee

L. Thorn

INVENTOR:

Mathias Kondolf

by Osgood Davis

his Attys

ANDREW. B. GRAHAM CO., PHOTO-LITHOGRAPHERS, WASHINGTON, D. C.

M. KONDOLF.

MALT STIRRER.

APPLICATION FILED JULY 25, 1908.

942,649.

Patented Dec. 7, 1909.

4 SHEETS—SHEET 3.

FIG.3.

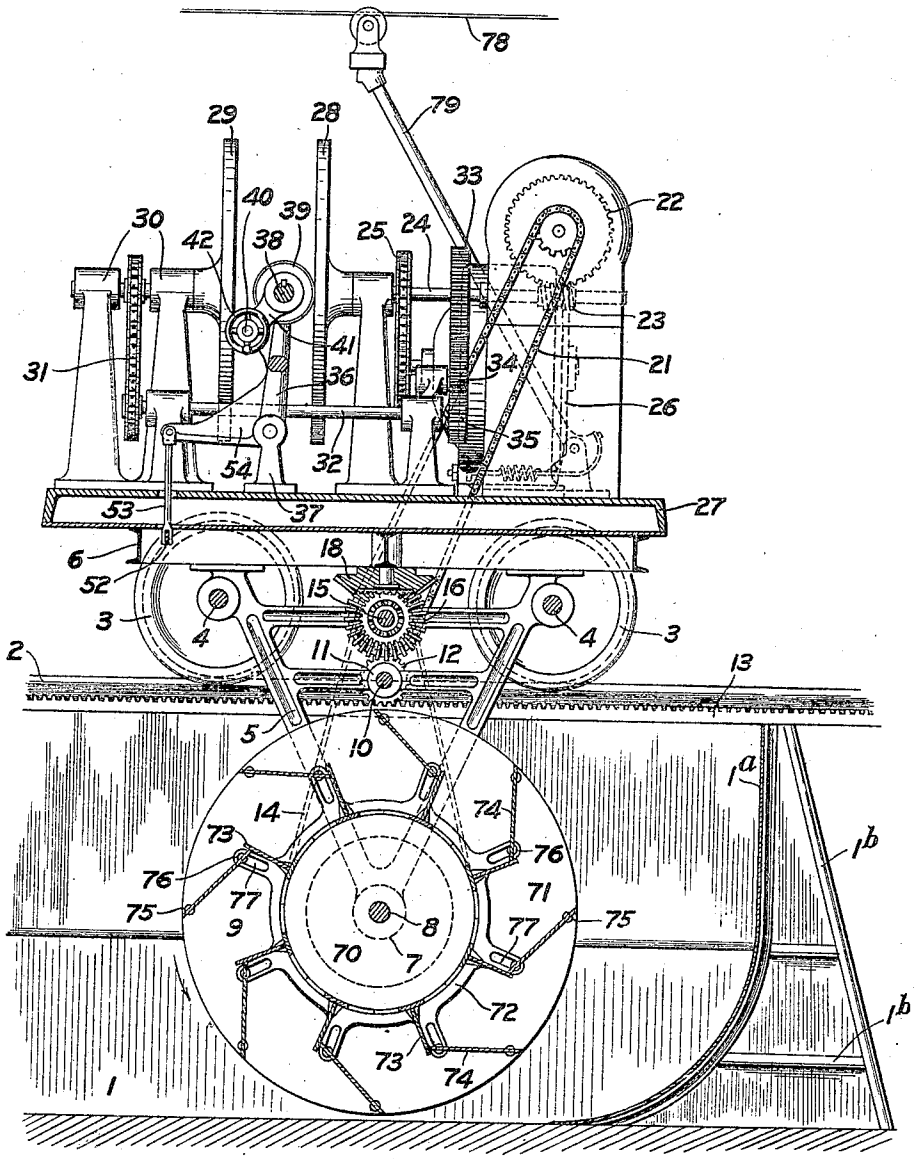

WITNESSES:

W. Gurnee

L. Thon.

INVENTOR:

Mathias Kondolf

by Osgood & Davis

his attys

M. KONDOLF.

MALT STIRRER.

APPLICATION FILED JULY 25, 1908.

942,649.

Patented Dec. 7, 1909.

4 SHEETS—SHEET 4.

FIG.5.

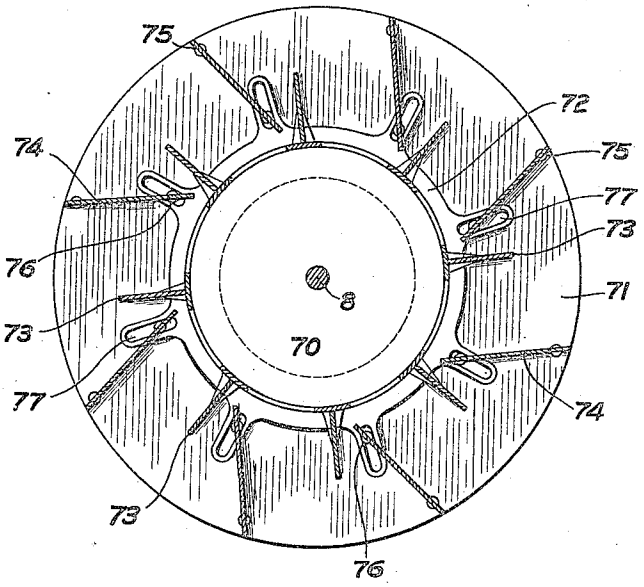

FIG.6.

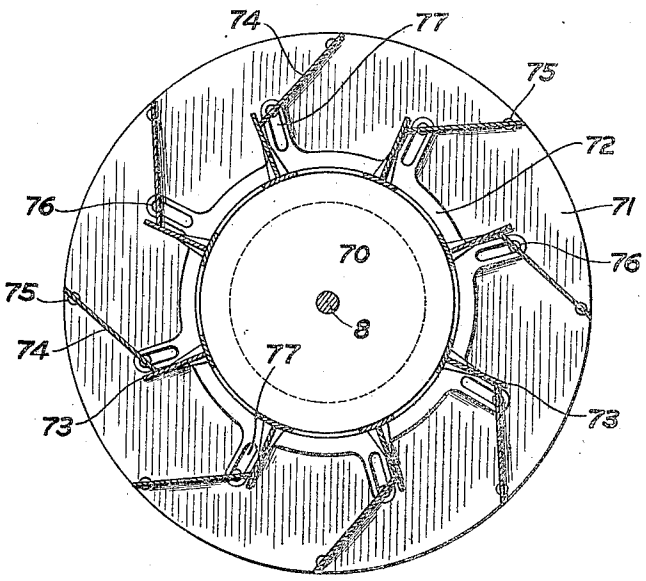

WITNESSES:

H. Gurnee

L. Thon

INVENTOR:

Mathias Kondolf

by Osgood & Davis

his attys

ANDREW. B. GRAHAM CO., PHOTO-LITHOGRA

UNITED STATES PATENT OFFICE.

MATHIAS KONDOLF, OF ROCHESTER, NEW YORK.

MALT-STIRRER.

942,649. Specification of Letters Patent. Patented Dec. 7, 1909.

Application filed July 25, 1908. Serial No. 445,316.

To all whom it may concern:

Be it known that I, MATHIAS KONDOLF, a citizen of the United States, and resident of Rochester, in the county of Monroe and State of New York, have invented certain new and useful Improvements in Malt-Stirrers, of which the following is a specification.

This invention relates to malt stirrers, and consists in the construction and combination of parts hereinafter described and claimed.

In the drawings:—Figure 1 is an end elevation of the complete machine; Fig. 2 is a top plan view; Fig. 3 is a cross-sectional elevation taken on the line 3—3 of Fig. 1; Fig. 4 is an elevation of a detail; Fig. 5 is a cross-section of the stirring wheel with the blades partly reversed; and Fig. 6 is a similar view with the blades completely reversed.

The apparatus comprises a truck that is adapted to move along above a pit or trough containing malt, and said truck carries a revoluble multi-bladed wheel that depends into the pit and travels along with the truck, stirring the malt as it revolves. The pit or trough 1 is substantially rectangular in cross-section, and may be of any desired length. Along the edges of said pit are rails 2, 2, which form a track for the flanged truck-wheels 3 (Figs. 1 and 3). On the shafts 4 of the wheels 3 are hangers 5 which support at their upper ends the frame 6 that carries the operating mechanism. The lower ends of said hangers constitute bearings 7 for the shaft 8 of the stirring-wheel 9.

A transverse shaft 10 is supported in bearings 11 in the hangers 5, and at its outer ends are pinions 12 that mesh into racks 13 extending along the floor between the edges of the pit 1 and the rails 2. When the shaft 10 is revolved, the hangers 5 and the frame 6, to which all the operating parts are attached, together with the wheel 9, move the length of the pit 1. The greater part of the weight rests upon the shafts 4, and so is carried by the truck-wheels 3.

The stirring-wheel 9 is revolved by a chain 14 that runs over sprockets on the shaft 8 and a driven shaft 15 parallel thereto. The latter is divided into two parts, and bevel gears 16, 17 and 18 are interposed between the parts whereby the section that carries the chain 14 may be reversed. This reversal is accomplished by means of a shifting clutch 19, splined to the shaft 15, which may be slid into connection with either gear 16 or 17 through the movement of a hand lever 20 (Fig. 2). The gear 16 is fast to one portion of the shaft, and the gear 17 is loose upon the other portion of the shaft. It is obvious that if the gear 16 turns as indicated by the arrow, the idler 18 causes the gear 17 to turn oppositely, therefore the shaft 15 and the wheel 9 revolve in the same direction as the gear to which the clutch 19 happens to be connected.

The shaft 15 is driven by a chain 21 that extends up through the frame 6 to the shaft of an inclosed worm-wheel 22. The worm 23 that meshes with the latter (Fig. 3) is on a horizontal shaft 24, that is continuously rotated from a prime mover by means of a chain 25. Said prime mover in the present instance consists of an electric motor 26 that is fixed to a bed plate 27 on the frame 6. As the motor runs at a comparatively high speed, the worm-gear connection to the wheel 9 is necessary to obtain a sufficiently low speed at the shaft 8.

On the end of the shaft 24 is a friction disk 28. A corresponding disk 29 is supported in line with the disk 28 in bearings 30, and is driven by a chain 31 from a countershaft 32. A gear 33 on the shaft 24 meshes with an idler 34 (Fig. 2), and that in turn with a gear 35 on said countershaft, so that the latter is driven in the same direction as the shaft 24. Both the disks 28 and 29 therefore revolve in the same direction. Between the two said disks is a yoke 36, which is pivoted in brackets 37. A shaft 38 is revolubly supported in the ends of the yoke, and on said shaft is splined a friction pulley 39. Means are provided for moving the latter toward and from the center of the shaft 24 to vary the speed at which the shaft 38 revolves. Such means may comprise the screw shaft 40 which extends through the carrier 41, and which may be revolved by a hand-wheel 42. The inner end of the shaft 38 is connected through a chain 43 with a worm 44. The latter meshes (Fig. 1) with an inclosed worm-wheel 45, on the shaft of which is a bevel gear 46. This gear meshes with another 47, and from the shaft 48 to which the latter is fixed a chain 49 connects with the shaft 10 before described, and thus to the traction pinions 12. If the disk 28 revolves in the direction indicated in Fig. 2, it is evident that the pulley 39 will revolve toward said disk when resting against said disk. If the yoke 36 is swung so as to press

the pulley 39 against the disk 29, the direction of the said pulley rotation is reversed, and thus, through the worm 44, etc., the traction pinions 12 are reversed, and the truck travels in the opposite direction. This reversal occurs when the truck has reached one end of the pit 1, and is accomplished by the operator, who moves a lever 50 that is pivoted to the frame 6 at 51 (Figs. 1 and 4). Said lever has an arm 52, from the end of which a rod 53 extends upward to a bracket 54 on the yoke 36 (Fig. 3). Moving the lever from one side to the other raises or lowers the end of the bracket 54 and swings the yoke 36, pressing the friction pulley 39 into engagement with the disk 28 or 29, respectively.

The lever 50 is held in position to maintain the friction pulley in close contact with one disk, by means of pawls 55 that engage ratchet teeth 56 on a quadrant 57. Said pawls are lifted out of engagement with said teeth when the operator shifts the lever, by the usual latch-lever 58, from which a rod 59 connects to said pawls. If, however, the operator should not shift the lever 50 soon enough, the pawls 55 are automatically thrown off, and the lever is thus left free, so that the friction pulley may release itself, stopping the progress of the machine. This release is accomplished as follows: On the side wall of the pit 1 at each end is a lug 60. A vertical rod 61, held in bearings 62 on the hanger 5, carries at its lower end an arm that projects outward and is adapted to strike the lug 60 (Fig. 4). When the latter occurs, the rod 61 is turned, and another arm 63 at its upper end swings also, and pulls out a rod 64 that is attached to one arm of a bell-crank 65. The latter is thereby tilted, and its horizontal arm carries upward a bar 66. The latter is connected through links 67 with curved bars 68 that lie adjacent to the quadrant 57, and are pivoted thereto at 69. Said bars 68 are of the same radius as the quadrant 57, and therefore, when swung up above the top edge of the latter, are certain to strike the pawls 55, and disengage them from the ratchet teeth 56.

The stirring-wheel 9 constitutes one of the novel features of this invention, and is illustrated in Figs. 1, 3, 5 and 6.

A disk 70 is fixed to each end of the shaft 8, and to each disk is bolted a circular end plate 71, and these parts together form the frame for a series of shovel blades. A spider 72 is supported by each disk 70 and is revoluble thereon. A series of radial plates 73 are bolted to the peripheries of the said disks, and extend from one to the other thereof. The end plates 71, the disks 70, and the plates 73, therefore, form a single revoluble structure similar to a paddle wheel. Another series of blades 74 extend between the end plates 71, and are not fixed thereto but are hung on pivots 75 at their outer edges which extend into said end plates. Said blades may swing on said pivots between the adjacent plates 73. When the blades 74 lie against the plates 73 (Fig. 3), they constitute a series of scoops which pick up the malt lying in the pit 1 and carry it upward and over the top of the shaft 8, and the malt is thus thoroughly stirred and aerated. As long as the shaft 8 turns in the direction indicated in Fig. 3, the plates 74 lie as shown, but when the direction of rotation of said shaft is reversed (by means of the lever 20 and clutch 19 hereinbefore described), the malt behind said blades banks up against the lowermost ones and pushes them over on the pivots 75 (Fig. 5). In order that the blades 74 may all reverse simultaneously, the inner edges thereof carry pivots or studs 76 that enter slots 77 in the spider 72. The slots provide for the radial movement of the studs 76 as the blades 74 swing on the pivots 75. As one blade 74 is reversed by the pressure of the malt against it the spider 72 is moved around a short distance, and swings the rest of the blades 74 until they assume the position shown in Fig. 6. On the reversal of the truck, the blades 74 and plates 73 constitute scoops that act in the direction opposite to the former movement, or as shown by the arrow in Fig. 6. Each blade 74 is tilted into positions in planes at opposite similar angles to a plane passing through the axis of rotation of the frame of the stirrer 9 (the shaft 8) and through the pivotal axis (75) of each blade.

If an electric motor is used as a prime mover, as illustrated herewith, current may be conducted thereto from wires 78 through a suitable trolley pole 79.

A removable partition is placed in each end of the pit 1, in order that the pit may be swept out. Said partition consists of a plate 1^a (Fig. 3), curved at its lower portion to conform to the shape of the wheel 9, and fitted with suitable braces 1^b. The lower edge of the plate 1^a fits close to the floor of the pit 1, and as the wheel 9 approaches said plate and comes up against it, every particle of malt is caught up and lifted by the blades 74.

It will be noted that the action of this device differs from others in that the malt is lifted and dropped, becoming thoroughly aerated and separated in its descent, the action being a close approximation to shoveling.

In this mechanism small masses of the malt are lifted from the main mass, turned over and dribbled back upon the main mass, thus thoroughly aerating the malt and cooling it.

What I claim is:

1. A malting pit, a track above the same, a carriage on the track, motor means for

driving the carriage in both directions, a rotary frame carried by the carriage, means for rotating the same, a series of shovel blades pivoted in said frame on pivots substantially parallel to the axis of rotation of the frame, and a spider rotatable with reference to said frame and connected to said shovel blades whereby the blades may be tilted into either of two positions at similar angles to a radial plane passing through the axis of rotation and through the pivotal axis of each blade.

2. A malting pit, a track above the same, a carriage on the track, motor means for driving the carriage in both directions, a rotary frame carried by the carriage, means for rotating the same, a series of shovel blades pivoted near their outer edges to said frame on pivots substantially parallel to the axis of rotation of the frame and near the peripheral portion thereof, and means rotatable with reference to said frame for supporting the inner portions of said blades whereby upon rotation of said means with reference to the frame the inner portions of the blades are swung to different angles to a plane passing through the axis of rotation of the frame and the pivotal axis of each blade.

3. A malting pit, a track above the same, a carriage on the track, motor means for driving the carriage in both directions, a rotary frame carried by the carriage, means for rotating the same, a series of shovel blades pivoted near their outer edges to said frame on pivots substantially parallel to the axis of rotation of the frame and near the peripheral portion thereof, studs carried by said blades near their inner edges, and a spider plate revoluble with reference to the frame and having slots for said studs whereby on rotation of said spider frame the shovel blades may be tilted to similar angles to opposite sides of a plane passing through the axis of rotation of the frame and through the pivotal axis of each shovel blade.

MATHIAS KONDOLF.

Witnesses:
D. GURNEE,
L. THON.