(12) INTERNATIONAL APPLICATION PUBLISHED UNDER THE PATENT COOPERATION TREATY (PCT)

(19) World Intellectual Property Organization
International Bureau

(43) International Publication Date
07 June 2018 (07.06.2018)

WIPO | PCT

(10) International Publication Number
WO 2018/099802 A1

(51) International Patent Classification:
F23M 20/00 (2014.01) *F02M 55/04* (2006.01)
F23K 5/14 (2006.01)

(21) International Application Number:
PCT/EP2017/080235

(22) International Filing Date:
23 November 2017 (23.11.2017)

(25) Filing Language: English

(26) Publication Language: English

(30) Priority Data:
1620499.2 02 December 2016 (02.12.2016) GB

(71) Applicant: **DELPHI TECHNOLOGIES IP LIMITED** [BB/BB]; Erin Court, Bishop's Court Hill, St. Michael (BB).

(72) Inventors: **MACLANE, Stephen, Joseph**; C/O DELPHI DIESEL SYSTEMS, Courtney Road, Hoath Way, GILLINGHAM, KENT ME8 0RU (GB). **HUTCHINS, Stephen**; C/O DELPHI DIESEL SYSTEMS, Courtney Road, Hoath Way, GILLINGHAM, KENT ME8 0RU (GB).

(74) Agent: **DELPHI FRANCE SAS**; Bâtiment le Raspail - ZAC Paris Nord 2 22 avenue des Nations CS65059 Villepinte, 95972 Roissy CDG Cedex (FR).

(81) Designated States *(unless otherwise indicated, for every kind of national protection available)*: AE, AG, AL, AM, AO, AT, AU, AZ, BA, BB, BG, BH, BN, BR, BW, BY, BZ, CA, CH, CL, CN, CO, CR, CU, CZ, DE, DJ, DK, DM, DO, DZ, EC, EE, EG, ES, FI, GB, GD, GE, GH, GM, GT, HN, HR, HU, ID, IL, IN, IR, IS, JO, JP, KE, KG, KH, KN, KP, KR, KW, KZ, LA, LC, LK, LR, LS, LU, LY, MA, MD, ME, MG, MK, MN, MW, MX, MY, MZ, NA, NG, NI, NO, NZ, OM, PA, PE, PG, PH, PL, PT, QA, RO, RS, RU, RW, SA, SC, SD, SE, SG, SK, SL, SM, ST, SV, SY, TH, TJ, TM, TN, TR, TT, TZ, UA, UG, US, UZ, VC, VN, ZA, ZM, ZW.

(84) Designated States *(unless otherwise indicated, for every kind of regional protection available)*: ARIPO (BW, GH, GM, KE, LR, LS, MW, MZ, NA, RW, SD, SL, ST, SZ, TZ, UG, ZM, ZW), Eurasian (AM, AZ, BY, KG, KZ, RU, TJ, TM), European (AL, AT, BE, BG, CH, CY, CZ, DE, DK, EE, ES, FI, FR, GB, GR, HR, HU, IE, IS, IT, LT, LU, LV, MC, MK, MT, NL, NO, PL, PT, RO, RS, SE, SI, SK, SM,

(54) Title: MULTI-CHAMBER HELMHOLTZ RESONATOR

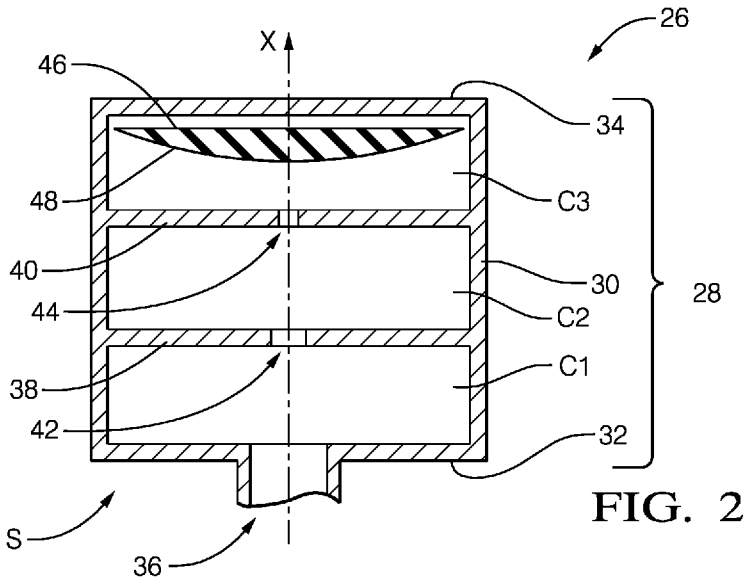

FIG. 2

(57) Abstract: A Helmholtz resonator (26) adapted to attenuate pressure fluctuations propagating in an injection fuel equipment, the Helmholtz resonator comprising at least one partition wall (38) dividing an inner space in distinct chambers (C1, C2), said partition wall being provided with an aperture (42) creating an internal fluid communication between said distinct chambers, the opening of the resonator opening in one of the chambers.

[Continued on next page]

WO 2018/099802 A1

TR), OAPI (BF, BJ, CF, CG, CI, CM, GA, GN, GQ, GW, KM, ML, MR, NE, SN, TD, TG).

Published:

— *with international search report (Art. 21(3))*

MULTI-CHAMBER HELMHOLTZ RESONATOR

TECHNICAL FIELD

The present invention relates to a Helmholtz resonator adapted to be arranged in the fluid circuit of a fuel injection equipment in order to attenuate pressure fluctuations propagating in said circuit.

BACKGROUND OF THE INVENTION

Pressure fluctuations within a fuel injection system are undesirable as they can lead to external leakage or starving critical components of lubricating oil. Current solution to dampen out these oscillations include gas filled capsule dampers, moving piston pressure regulators or basic Helmholtz resonators fitted at critical points within the system to maintain a more even pressure.

Capsule type and moving piston pressure regulators lack durability and, in addition these types of attenuators require moving parts tending to move with the frequency demonstrating the highest frequency this potentially letting through some lower energy frequencies that could offer additional problems.

SUMMARY OF THE INVENTION

Accordingly, it is an object of the present invention to resolve the above mentioned problems in providing a Helmholtz resonator adapted to attenuate pressure fluctuations propagating in an injection fuel equipment, said Helmholtz resonator having a peripheral wall enclosing an inner space, an opening arranged through said peripheral wall for enabling a fluid communication with said inner space.

The Helmholtz resonator further comprises at least one partition wall dividing said inner space in distinct chambers, said partition wall being provided with an aperture creating an internal fluid communication between said distinct chambers, the opening opening in one of the chambers.

The Helmholtz resonator comprises a first and a second chambers in fluid communication between each other via a first aperture arranged in a first partition wall and, a third chamber in fluid communication with the second chamber via a second aperture arranged in a second partition wall.

Also, the first chamber is larger than the second chamber and, the second chamber larger than the third chamber.

Also, the peripheral walls may comprise a cylindrical wall extending along a main axis from a first transverse end wall to a second transverse end wall.

Also, said at least one partition wall may be parallel to any one of the transverse end walls.

Also, the first and second partition walls may be parallel to each other, the second chamber being interposed between the first chamber and the third chamber.

As a preferred example, the volume of the first chamber is about 20 cm3 and, the volume of the third chamber is about 10 cm3.

Also, the first aperture has a cross section area of about 1 mm^2 and, the second aperture has a cross section area of about. 0.3 mm^2.

Also, the Helmholtz resonator may comprise more than three distinct chambers.

Also, the opening may be arranged to open in the first chamber.

As a preferred example, the cross section area of the opening is about 3 mm^2.

Also, the Helmholtz resonator may further comprises an outlet arranged in a peripheral wall for enabling a fluid communication with said inner space.

Also, the opening and the outlet may open in the same chamber.

Also, the opening and the outlet may both open in the second chamber.

Also, the Helmholtz resonator may further comprises a damper, arranged in one of the chambers, said damper moving as a function of the pressure fluctuations.

Also, said damper may comprises a gas filled diaphragm.

Also, in another embodiment, said damper may be a viscous damper comprising a slidable piston dividing the chamber in which it is arranged in a first sub-chamber and a second sub-chamber in fluid communication with each other via a communication passage, said viscous damper further comprising a spring arranged between said piston and a wall of said chamber in which the piston is arranged so that, the volume of the sub-chambers vary relative to each other as a function of the pressure fluctuations.

The invention further extends to a fuel pump of a fuel injection equipment wherein fuel entering via a pump inlet is pressurised in a compression chamber and is expelled via a pump outlet, a camshaft rotating, in use, between a front and a rear bearings urging a reciprocating piston to vary the volume of said compression chamber, the pump further comprising a Helmholtz resonator as described in the previous lines and is arranged to attenuate pressure fluctuations in said pump.

BRIEF DESCRIPTION OF THE DRAWINGS

The present invention is now described by way of example with reference to the accompanying drawings in which:

Figure 1 is a schematic diagram of a high pressure fuel pump provided with a multibody Helmholtz resonator as per the invention.

Figure 2 is an axial section of a first embodiment of the Helmholtz resonator of figure 1.

Figure 3 is a 3D view of a second embodiment of the resonator of figure 1.

Figure 4 is an alternative to the resonator of figure 3.

DESCRIPTION OF THE PREFERRED EMBODIMENTS

A pumping system 10 of a fuel injection equipment is sketched on figure 1 specially highlighting the fuel flows. The pumping system 10 has a housing 12 (not shown) defining a cambox having an inner space in which a camshaft 14 is arranged between a front bearing 16 aligned with a rear bearing 18, said camshaft 14 cooperating with a piston sliding in a bore.

In use, the camshaft 14 rotates and urges said piston to perform a pumping cycle varying the volume of a compression chamber 20 and, fuel entering the pumping system 10 via an inlet 22 is compressed in said compression chamber 20 and is expelled via an outlet 24 wherefrom it is delivered to fuel injectors. Part of the fuel is not pressurised and lubricates the cambox, the bearings 16, 18 or the piston and bore adjustment and, the reciprocal displacements of the piston generates pressure fluctuations that propagate in said

low pressure fuel. The pumping system 10 further comprises an attenuator 26 arranged to attenuate said pressure fluctuations.

The attenuator 26 is a multibody Helmholtz resonator 26, a first embodiment of which being presented in figure 2. The Helmholtz resonator 26 has a housing 28 comprising a peripheral cylindrical wall 30 extending along a main axis X from a lower, or first, transverse wall 32 to an upper, or second, transverse wall 34. Said housing 28 defines an inner space S and, an opening 36 provided in the lower transverse face 32 is adapted to be connected to low pressure areas where in the pump pressure waves propagate, said opening 36 being both an inlet and an outlet for said pressure waves. A first partition wall 38 and a second partition wall 40 arranged in the housing 28 divide the inner space S in a lower or first chamber C1, a middle or second chamber C2 and, in an upper or third chamber C3. The lower chamber C1 is between the lower wall 32 and first partition wall 38, the middle chamber C2 is between the two partition walls 38, 40 and, the upper chamber C3 is between the second partition wall 40 and the upper transverse wall 34. The inlet opening 36 opens in the first chamber C1, the first partition wall 38 is provided with a first aperture 42 creating a first permanent fluid communication between the first chamber C1 and the second chamber C2 and, the second partition wall 40 is provided with a second aperture 44 creating a second permanent fluid communication between the second chamber C2 and the third chamber C3.

The relative dimensions of the Helmholtz resonator 26, the volumes of the chambers, the size of the apertures is tuned as per the use and the nature of the pressure waves to attenuate and, models have been made for a vehicle diesel fuel injection equipment and tests have been conducted successfully for a resonator 26 having a circular inlet opening 36 of 2mm diameter, a circular first aperture 42 of 1mm diameter and, a circular second aperture 44 of 0.6 mm diameter, all three holes being centrally aligned about the main axis X. Also, the first chamber C1 is 20 cm3, the second chamber C2 is 15 cm3 and the third chamber is 10 cm3. Multiple alternatives can be derived from said dimensions, for instance non-aligned or non-circular openings, relative volume of the chambers, the 2mm diameter corresponding to approximately a cross section area of 3 mm2, 1 mm

diameter to approximately a cross section area of 1mm2 and, 0.6 mm to approximately a cross section area of 0.3 mm2.

Said first embodiment of the Helmholtz resonator 26 is typically designed to be arranged on a pump where the direction of the return fuel flow is aligned to the main axis X.

In another alternative, where said resonator is arranged so the main axis X is perpendicular to the direction of the return flow, the opening 36 can be radially arranged through the cylindrical peripheral wall 30 and open in the first chamber C1 or, as it is represented on figure 4, in the second chamber C2. Moreover, in addition to the opening 36, the resonator 26 can be provided with an outlet 37 also radially arranged through the peripheral wall 30, said outlet 37 opening either in the same chamber as the opening 36 or in another chamber.

The resonator 26 presented comprises three chambers but resonators having two chambers and consequently only one partition wall or, having more than three chambers and consequently more than two partition walls is possible.

The resonator of figure 2 further comprises a flexible damper 46 arranged in the third chamber C3 against a face of the upper transverse wall 34. Said damper 46 captures pressurised gas between said transverse wall 34 and a flexible diaphragm 48 which peripheral edge is fixed to said wall 34 and which central area balloons under the pressure of the gas. The gas pressure is typically in the order of 3 to 5 bar that is the nominal pressure for the system. In use, when a pressure waves propagates it enters the Helmholtz resonator 26 where said wave is firstly dampened in the several chambers and finally via said flexible damper 46 which varies in volume, varying consequently the volume of the third chamber C3.

In a second embodiment presented on figure 3, the resonator 26 is provided with an oscillating damper 49 comprising a sliding piston 50 and a spring 52 arranged in the third chamber C3. The piston 50 divides said third chamber C3 into a first sub-chamber C31 that is below the piston and is limited by the second partition wall 40 and, a second sub-chamber C32 above the piston and limited by the upper transverse wall 34. The piston 50 has a peripheral outer face 54 slidably guided against the inner face of the cylindrical wall 30 and is axially X limited by a lower face 56, that is the ceiling of the first sub-chamber C31 and by

an upper transverse face 58 that is the floor of the second sub-chamber C32. The piston 50 is further provided with through passage 60 (two being represented) extending between the lower 56 and the upper 56 faces so that, the sub-chambers C31, C32 are in fluid communication via said passages 60.

Alternatively to the straight passages 60 represented, the fluid communication could be provided, for instance, by a helix groove arranged on the peripheral outer face of the piston.

The piston is further provided with a spring centering device 62 that is a member centrally protruding from its upper face 58 into the second sub-chamber C32. Said device 62 enables to engage around it the last turns of the spring 52 which on the other end is fixed to the upper transverse wall 34. Thanks to the spring 52, the piston 50 is maintained in the third chamber C3 distant from both the second partition wall 40 and the second transverse wall 34 and, is able to oscillate as a function of the pressure fluctuations entering said third chamber C3.

In an alternative not represented, the spring 52 could be arranged in the first sub-chamber C31, between the lower face 56 of the piston and the second partition wall 40 or, the piston could be arranged between two springs, one in each sub-chambers.

In use, similarly to the embodiment with a flexible damper 46, the pressure fluctuation are dampened in the chambers of the resonator 26 and, finally the piston 50 changes position, varying the relative volumes of the first and the second sub-chambers.

Also the embodiment of figure 3, having an inlet opening 36 through the first transverse face 32 is suited to be arranged aligned with the low pressure flow direction in which pressure fluctuation propagate and, the embodiment of figure 4 having an opening 36 and an outlet 37 both radially opening through the cylindrical peripheral wall 30 in the second chamber C2 is suited to be arranged perpendicular to said low pressure flow direction.

The resonators 26 can be arranged as an added devices components but in alternatives arrangements, the resonator 26 can be made integral to the pump, the housing 28 of the resonator being integrally part to the housing 12 of the pump, the upper transverse wall 34 being screwed, or fixed by other means, to the

cylindrical wall 30, the partition walls and dampers being arranged prior to closing the housing 28 by the upper transverse wall 34.

LIST OF REFERENCES

X	main axis
S	inner space
C1	first chamber
C2	second chamber
C3	third chamber
C31	first sub-chamber
C32	second sub-chamber
10	pumping system
12	housing
14	camshaft
16	front bearing
18	rear bearing
20	compression chamber
22	inlet
24	outlet
26	attenuator - Helmholtz resonator
28	housing of the resonator
30	cylindrical wall
32	lower, first, transverse wall
34	upper, second, transverse wall
36	opening
37	outlet
38	first partition wall
40	second partition wall
42	first aperture
44	second aperture
46	flexible damper
48	diaphragm
49	oscillating damper
50	piston
52	spring
54	peripheral outer face of the piston
56	lower face of the piston
58	upper face of the piston
60	passage
62	spring centring device

CLAIMS:

1. Helmholtz resonator (26) suitable for attenuating pressure fluctuations propagating in an injection fuel equipment, said Helmholtz resonator (26) having a peripheral wall (30, 32, 34) enclosing an inner space (S), an opening (36) arranged through said peripheral wall (30, 32, 34) for enabling a fluid communication with said inner space (S),

characterised in that the Helmholtz resonator (26) further comprises a first chamber (C1) and a second chamber (C2) in fluid communication between each other via a first aperture (42) arranged in a first partition wall (38) and, a third chamber (C3) in fluid communication with the second chamber (C2) via a second aperture (44) arranged in a second partition wall (40), the opening (36) opening in one of the chambers and wherein

the first chamber (C1) is larger than the second chamber (C2) and, the second chamber (C2) is larger than the third chamber (C3).

2. Helmholtz resonator (26) as claimed in the preceding claim wherein the peripheral walls (30, 32, 34) comprise a cylindrical wall (30) extending along a main axis (X) from a first transverse end (32) wall to a second transverse end wall (34).

3. Helmholtz resonator (26) as claimed in claim 2 wherein said at least one partition wall (38) is substantially parallel to any one of the transverse end walls (32, 34) .

4. Helmholtz resonator (26) as claimed in any one of the preceding claims wherein the first (38) and second (40) partition walls are substantially parallel to each other, the second chamber (C2) being interposed between the first chamber (C1) and the third chamber (C3).

5. Helmholtz resonator (26) as claimed in any one of the preceding claims wherein the volume of the first chamber (C1) is about 20 cm^3 and, the volume of the third chamber (C3) is about 10 cm^3.

6. Helmholtz resonator (26) as claimed in any one of the preceding claims wherein the first aperture (42) has across section area of about 1 mm^2 and, the second aperture (44) has across section area of about 0.3 mm^2.

7. Helmholtz resonator (26) as claimed in any one of the preceding claims comprising more than three distinct chambers.

8. Helmholtz resonator (26) as claimed in any one of the preceding claims wherein the opening (36) is arranged to open in the first chamber (C1).

9. Helmholtz resonator (26) as claimed in claim 8 wherein cross section area of the opening (36) is about 3 mm^2.

10. Helmholtz resonator (26) as claimed in any one of the claims 1 to 7 further comprising an outlet (37) arranged in a peripheral wall (30) for enabling a fluid communication with said inner space (S).

11. Helmholtz resonator (26) as claimed in claim 10 wherein the opening (36) and the outlet (37) open in the same chamber.

12. Helmholtz resonator (26) as claimed in claim 11 wherein the opening (36) and the outlet (37) both open in the second chamber (C2).

13. Helmholtz resonator (26) as claimed in any one of the preceding claims further comprising a damper (46, 49) arranged in one of the chambers, said damper moving as a function of the pressure fluctuations.

14. Helmholtz resonator (26) as claimed in claim 13 wherein said damper (46) comprises a gas filled diaphragm (48).

15. Helmholtz resonator (26) as claimed in claim 13 wherein said damper is a viscous damper (49) comprising a slidable piston (50) dividing the chamber in which it is arranged in a first sub-chamber (C31) and a second sub-chamber (C32)

in fluid communication with each other via a communication passage (60), said viscous damper (49) further comprising a spring (62) arranged between said piston (50) and a wall of said chamber in which the piston is arranged so that, the volume of the sub-chambers (C31, C32) vary relative to each other as a function of the pressure fluctuations.

16. Fuel pump (10) of a fuel injection equipment wherein fuel entering via a pump inlet (22), is pressurised in a compression chamber (20) and is expelled via a pump outlet (24), a camshaft (14) rotating, in use, between a front (16) and a rear (18) bearings urging a reciprocating piston to vary the volume of said compression chamber, the pump (10) further comprising a Helmholtz resonator (26) as set in any one of the preceding claims arranged to attenuate pressure fluctuations in said pump.

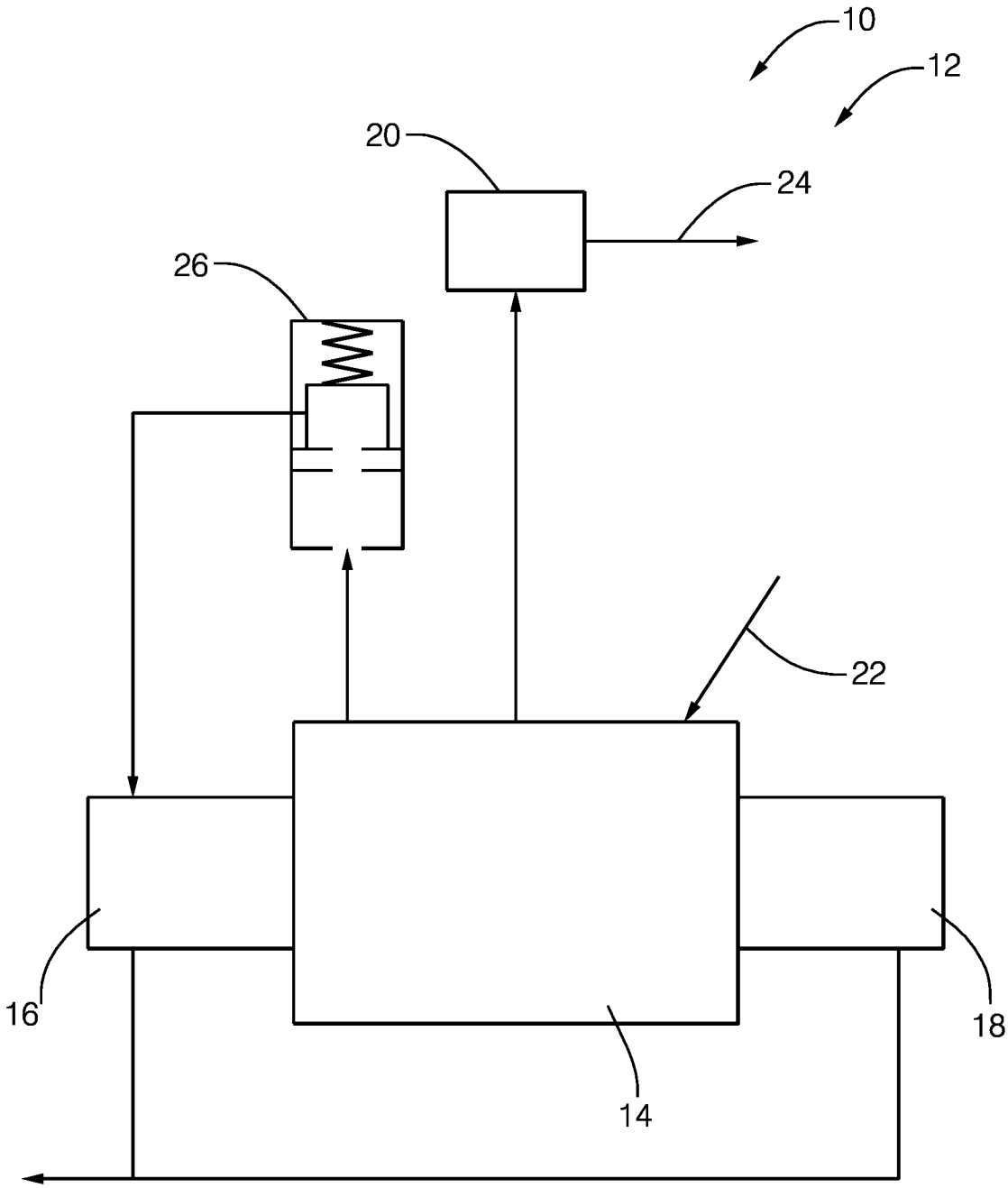

FIG. 1

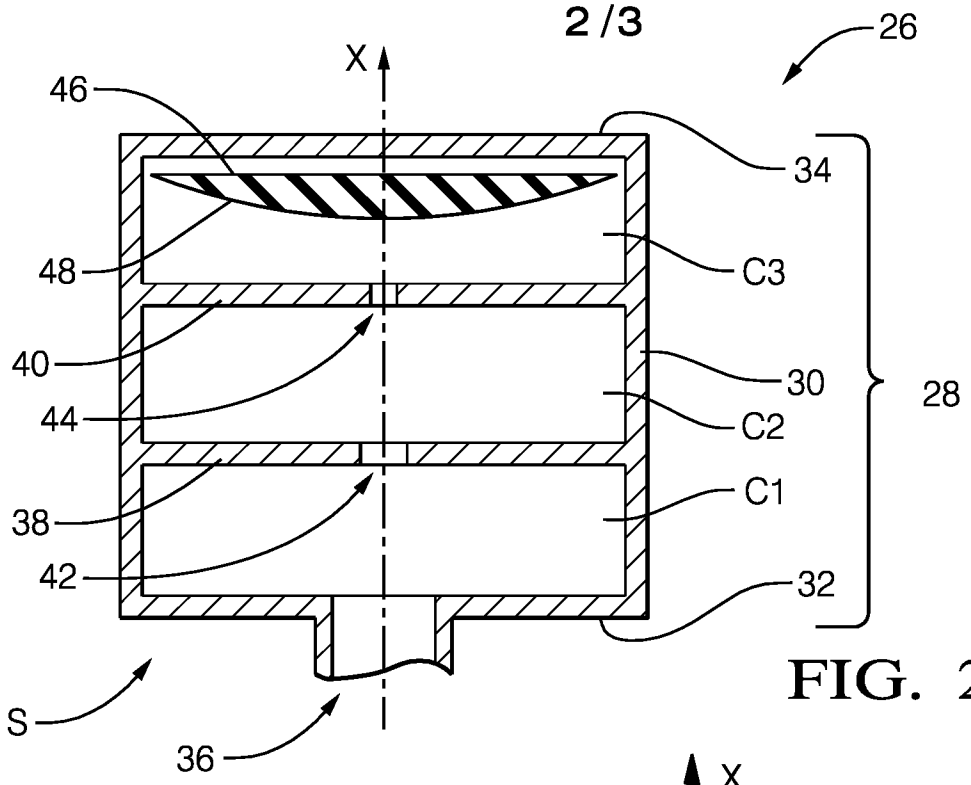
26
X
46
34
48
C3
40
30
28
44
C2
38
C1
42
32
S
36

FIG. 2

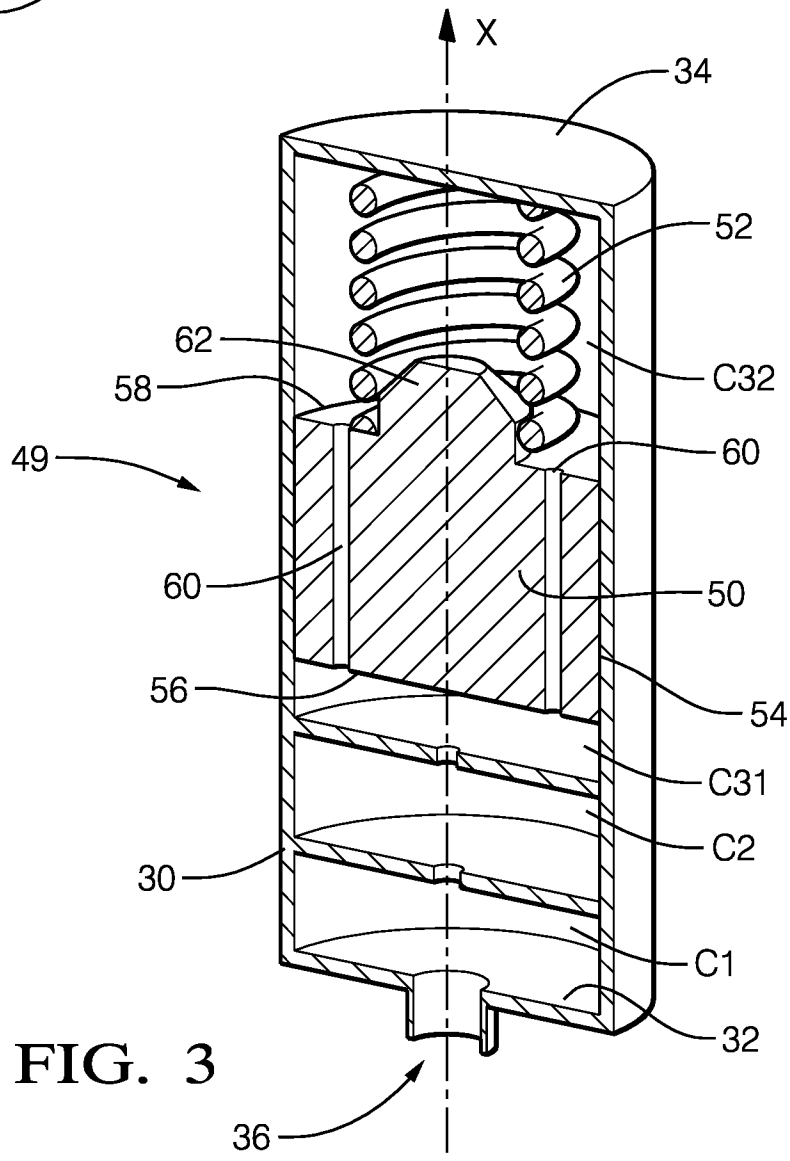
X
34
52
62
C32
58
49
60
60
50
56
54
C31
C2
30
C1
32
36

FIG. 3

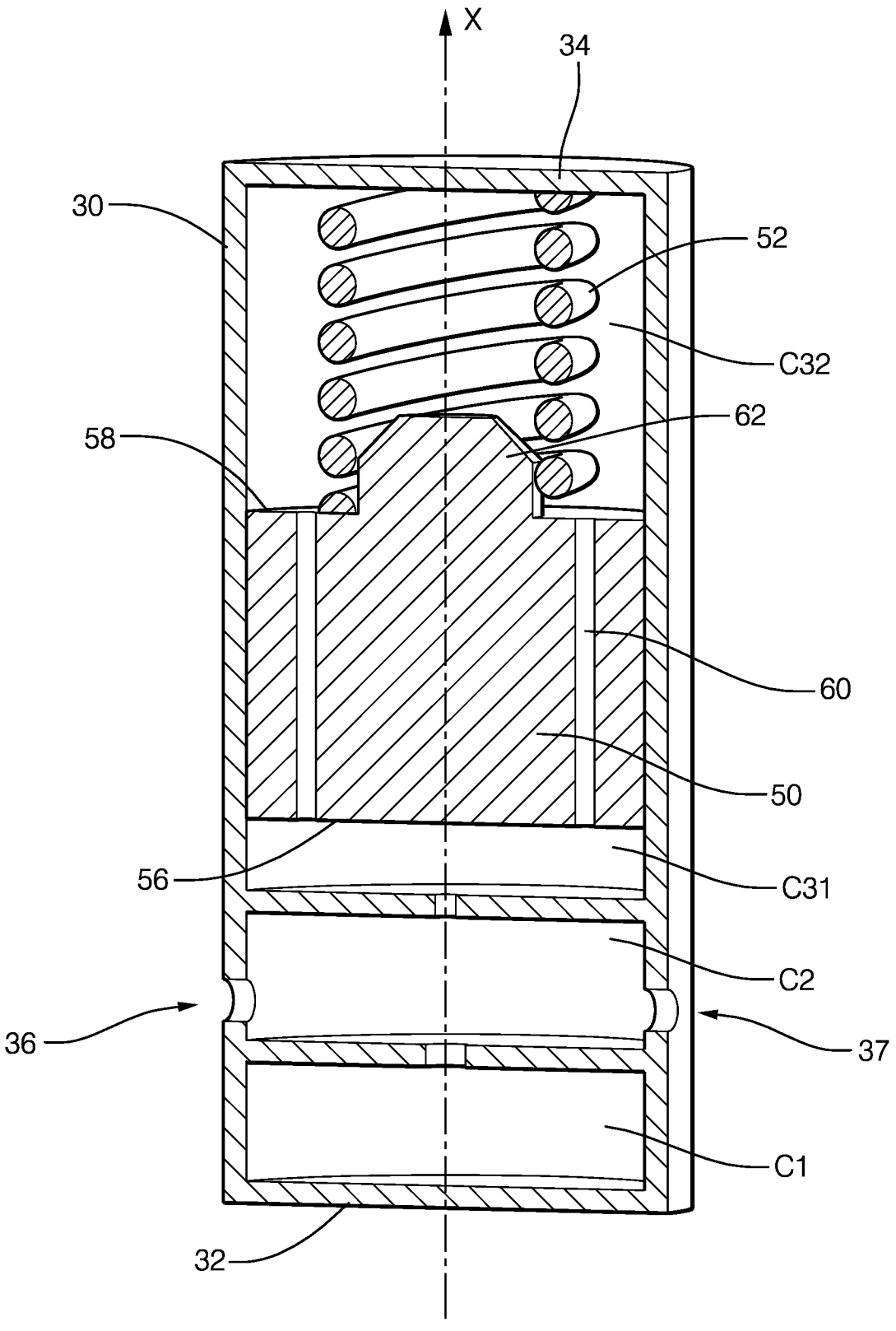

FIG. 4

INTERNATIONAL SEARCH REPORT

International application No
PCT/EP2017/080235

A. CLASSIFICATION OF SUBJECT MATTER
INV. F23M20/00 F23K5/14 F02M55/04
ADD.

According to International Patent Classification (IPC) or to both national classification and IPC

B. FIELDS SEARCHED

Minimum documentation searched (classification system followed by classification symbols)
F23M F23K F02M

Documentation searched other than minimum documentation to the extent that such documents are included in the fields searched

Electronic data base consulted during the international search (name of data base and, where practicable, search terms used)
EPO-Internal, WPI Data

C. DOCUMENTS CONSIDERED TO BE RELEVANT

Category*	Citation of document, with indication, where appropriate, of the relevant passages	Relevant to claim No.
X	EP 2 397 760 A1 (ALSTOM TECHNOLOGY LTD [CH]) 21 December 2011 (2011-12-21) paragraphs [0039] - [0043]; figure 4	1-6,8-10
X Y	DE 10 2005 062284 A1 (ALSTOM TECHNOLOGY LTD [CH]) 31 January 2008 (2008-01-31) paragraphs [0022] - [0024], [0037]; figures 1, 3, 4	1,4-6, 8-12 2-4,7, 13-16
Y	EP 2 642 204 A1 (ALSTOM TECHNOLOGY LTD [CH]) 25 September 2013 (2013-09-25) paragraphs [0047] - [0049]; figure 9b	2-4,7
Y	US 6 209 525 B1 (KONISHI KEIICHI [JP] ET AL) 3 April 2001 (2001-04-03) column 5, line 54 - column 6, line 4; figures 1, 4, 5, 7 column 4, lines 32-54	13-16

-/--

[X] Further documents are listed in the continuation of Box C.

[X] See patent family annex.

* Special categories of cited documents :

"A" document defining the general state of the art which is not considered to be of particular relevance

"E" earlier application or patent but published on or after the international filing date

"L" document which may throw doubts on priority claim(s) or which is cited to establish the publication date of another citation or other special reason (as specified)

"O" document referring to an oral disclosure, use, exhibition or other means

"P" document published prior to the international filing date but later than the priority date claimed

"T" later document published after the international filing date or priority date and not in conflict with the application but cited to understand the principle or theory underlying the invention

"X" document of particular relevance; the claimed invention cannot be considered novel or cannot be considered to involve an inventive step when the document is taken alone

"Y" document of particular relevance; the claimed invention cannot be considered to involve an inventive step when the document is combined with one or more other such documents, such combination being obvious to a person skilled in the art

"&" document member of the same patent family

Date of the actual completion of the international search	Date of mailing of the international search report
19 January 2018	05/02/2018

Name and mailing address of the ISA/	Authorized officer
European Patent Office, P.B. 5818 Patentlaan 2 NL - 2280 HV Rijswijk Tel. (+31-70) 340-2040, Fax: (+31-70) 340-3016	Coli, Enrico

1

Form PCT/ISA/210 (second sheet) (April 2005)

INTERNATIONAL SEARCH REPORT

International application No
PCT/EP2017/080235

C(Continuation). DOCUMENTS CONSIDERED TO BE RELEVANT

Category*	Citation of document, with indication, where appropriate, of the relevant passages	Relevant to claim No.
A	DE 33 24 805 A1 (BETR FORSCH INST ANGEW FORSCH [DE]) 17 January 1985 (1985-01-17) the whole document	1-12
A	JP H07 34990 A (FUJI HEAVY IND LTD) 3 February 1995 (1995-02-03) abstract; figures	1-12
A	WO 2013/144070 A1 (ALSTOM TECHNOLOGY LTD [CH]) 3 October 2013 (2013-10-03) page 7, lines 17-25; figure 2	1-12
A	JP H10 73062 A (MITSUBISHI MOTORS CORP) 17 March 1998 (1998-03-17) abstract; figures	1,13-16

1

INTERNATIONAL SEARCH REPORT

Information on patent family members

International application No
PCT/EP2017/080235

Patent document cited in search report	Publication date	Patent family member(s)	Publication date
EP 2397760 A1	21-12-2011	EP 2397760 A1	21-12-2011
		JP 5777417 B2	09-09-2015
		JP 2012002500 A	05-01-2012
		US 2011308654 A1	22-12-2011
DE 102005062284 A1	31-01-2008	NONE	
EP 2642204 A1	25-09-2013	CN 104204676 A	10-12-2014
		EP 2642204 A1	25-09-2013
		EP 2828580 A2	28-01-2015
		JP 2015518534 A	02-07-2015
		US 2015059345 A1	05-03-2015
		WO 2013139868 A2	26-09-2013
US 6209525 B1	03-04-2001	DE 19957591 A1	12-10-2000
		FR 2791735 A1	06-10-2000
		JP 2000291509 A	17-10-2000
		US 6209525 B1	03-04-2001
DE 3324805 A1	17-01-1985	NONE	
JP H0734990 A	03-02-1995	JP 3343871 B2	11-11-2002
		JP H0734990 A	03-02-1995
WO 2013144070 A1	03-10-2013	CN 104204677 A	10-12-2014
		EP 2831504 A1	04-02-2015
		JP 6138232 B2	31-05-2017
		JP 2015514180 A	18-05-2015
		RU 2014143769 A	27-05-2016
		US 2015075168 A1	19-03-2015
		WO 2013144070 A1	03-10-2013
JP H1073062 A	17-03-1998	JP 3511828 B2	29-03-2004
		JP H1073062 A	17-03-1998