(12) PATENT
(19) AUSTRALIAN PATENT OFFICE

(11) Application No. AU 199664222 B2
(10) Patent No. 726176

(54) Title
Video game system and game controller

(51)[6] International Patent Classification(s)
G06F 003/03 G06F 003/05
G06F 003/033

(21) Application No: 199664222 (22) Application Date: 1996.08.22

(30) Priority Data

(31) Number	(32) Date	(33) Country
7-246617	1995.08.30	JP

(43) Publication Date : 1997.03.06
(43) Publication Journal Date : 1997.03.06
(44) Accepted Journal Date : 2000.11.02

(71) Applicant(s)
Sony Computer Entertainment Inc.

(72) Inventor(s)
Satoshi Shinohara

(74) Agent/Attorney
GRIFFITH HACK,GPO Box 1285K,MELBOURNE VIC 3001

(56) Related Art
US 5396267
US 4824111

ABSTRACT OF THE DISCLOSURE

In a video game system and a game controller, discrepancy between the manipulation of the user and the display position on the screen, etc., can be prevented, without adding adjusting components after forwarding them from the factory. The digitized analog manipulation information which have been obtained from the manipulation information generating means are calibrated by the manipulation information calibrating means provided in the game controller, and then the digitized and calibrated analog manipulation information which have been obtained by calibration are transmitted to the game processing device.

AUSTRALIA

Patents Act 1990

COMPLETE SPECIFICATION

STANDARD PATENT

Applicant:

SONY COMPUTER ENTERTAINMENT INC.

Invention Title:

VIDEO GAME SYSTEM AND GAME CONTROLLER

The following statement is a full description of this invention, including the best method of performing it known to me/us:

VIDEO GAME SYSTEM AND GAME CONTROLLER

BACKGROUND OF THE INVENTION

FIELD OF THE INVENTION

This invention relates to a video game system and game controller, and more particularly, is applicable to that which performs analog controlling of a display position on the screen, etc., with a game controller, when it progresses a game, displaying the game contents which have been stored in, for instance, a CD-ROM on the screen.

DESCRIPTION OF THE RELATED ART

Heretofore, there is such a video game system that performs analog controlling of a display position on the screen, etc., with a game controller, and it progresses a game, displaying the game contents which have been stored in a video recording medium, such as a CD-ROM, on the screen of a television receiver.

The game controller of this video game system is provided with a manipulator which is operated by the user, such as a joy stick, and converts the manipulated variable of the joy stick from analog value into digital value, and then sends it to the game machine main frame.

When this analog value is obtained, in the game controller, the analog signal which is outputted from the analog switch is controlled in accordance with the manipulated variable of the joy stick. The game controller converts this analog signal with an analog-to-digital converter (hereinafter, referred to as an A/D converter) to obtain the analog value, and then directly sends out the manipulated variable of the joy stick represented with this digital value to the game machine main frame.

By the way, when a video game machine is forwarded from the factory, a deviation of adjustment of the analog switch may possibly occur. Besides, aged deterioration occurs in the mechanical part of the joy stick and the analog switch. For this reason, even though the manipulated variable of the joy stick is constant, the analog value may possibly drift from the original

value.

Accordingly, there has been such a problem that the display position on the screen, etc., may be possibly deviated from the manipulation of the user, after it has been forwarded from the factory. In addition, there has been such a problem that, when the deviation or the analog value has drifted from the original value, means for compensating it do not exist, or it is required to add some adjusting components.

SUMMARY OF THE INVENTION

In view of the foregoing, an object of this invention is to attempt to provide a video game system and game controller, in which occurrence of discrepancy between the manipulation of the user and the display position on the screen, etc., without adding of adjusting components after forwarding them from the factory, and a method of calibrating an electronic game.

According to one aspect this invention provides a video game system including:

game processing means for processing game contents; and a game controller for performing operations connected with said game contents; wherein

said game controller having:

manipulating information generating means for outputting digitized analog manipulation information, proportional to an analog manipulation input including an analog switch for outputting an analog signal which is proportional to said analog manipulation input, and an analog-to-digital converter, which provides digitized analog manipulation information; and

manipulation information calibrating means for operating said digitized analog manipulation information, thereby producing the digitized calibrated analog manipulation information which is a calibrated form of the analog manipulation information.

Another aspect of the invention provides a game

AUSTRALIAN PATENT OFFICE

controller, including:

manipulation information generating means for outputting digitized analog manipulation information, proportional to an analog manipulation input;

manipulation information calibrating means for operating said digitized analog manipulation information, thereby producing the digitized calibrated analog manipulation information which is a calibrated form of the analog manipulation information; and

output means for outputting said calibrated analog manipulation information.

Another aspect of the invention provides a method of calibrating an electronic game including the steps:

generating an analog signal representative of an analog position of a game controller by manipulating an analog switch to produce a manipulation input and outputting an analog signal from said analog switch which is proportional to said manipulation input;

converting the analog signal to a first digital signal; and correlating the first digital signal with a known portion of the game controller to provide a second digital signal which is a calibrated signal representing an actual portion of the game controller.

The nature, principle and utility of the invention will become more apparent from the following detailed description when read in conjunction with the accompanying drawings in which like parts are designated by like reference numerals or characters.

BRIEF DESCRIPTION OF THE DRAWINGS

In the accompanying drawings:

Fig. 1 is a block diagram illustrating a video game system and a game controller of one embodiment according to the present invention;

Figs. 2A and 2B are schematic diagrams showing a constitution of a transmit data packet and a receive data packet; and

AUSTRALIAN PATENT OFFICE

Fig. 3 is a flow chart showing the operating order of the controller.

DETAILED DESCRIPTION OF THE EMBODIMENT

Preferred embodiment of this invention will be described with reference to the accompanying drawings:

Fig. 1 shows a video game system 1 as a whole, in which a game controller, for instance, a controller 3 is connected to a game processing device, for instance, a game machine main frame 2, and the data are bidirectionally transmitted with the stated communication procedure.

The game machine main frame 2 has a built-in CD-ROM drive (not shown) for reproducing a CD-ROM and a built-in microcomputer (not shown) for processing the reproduced game contents, and it displays the game contents on the screen of a television receiver

AUSTRALIAN PATENT OFFICE

and progresses the game. Besides, the game machine main frame 2 controls the display position on the screen, etc., on the basis of information of digital and analog manipulation by the controller 3.

The controller 3 has been provided with manipulation information calibrating means, for instance, an one chip microcomputer 4 for generally controlling, manipulation information generating means, for instance, a manipulation-inputting analog switch 5, an A/D converter 6, and a plurality of digital switches 7 and 8 for inputting manipulation.

In this connection, the analog signal S1 which is outputted from the analog switch 5 is controlled in accordance with the manipulated variable at the joy stick.

The one chip microcomputer 4 includes a parallel I/O interface port (shown by PIO, in the figure) 9, a micro processor (shown by CPU, in the figure) 10, a serial I/O interface port (shown by SIO, in the figure) 11, a RAM 12, and a ROM 13.

The controller 3 gives the analog signal S1 which has been outputted by the analog switch 5 to the A/D converter 6 so as to convert it into digitized analog manipulation information, for instance, switch data S2. The controller 3 reads the switch data S2 in the micro processor 10 along with switch data S3 and S4 by the digital switches 7 and 8, via the parallel I/O interface port 9.

The controller 3 delivers the switch data which have been obtained through the operation by the micro processor 10 to the game machine main frame 2 as a receive data packet, via the serial I/O interface port 11.

Thereby, the controller 3 is able to give the game machine main frame 2 one analog value and plural digital values which are according to the user manipulation.

The controller 3 performs serial communication of the transmit data packet which has been issued from the game machine main frame 2, via the serial I/O interface port 11. The controller 3 detects the header part of the transmit data packet, employing a header-detection processing program which has been stored in the RAM 12.

Upon receiving the transmit data packet which has been

directed to itself, the controller 3 examines the data of the data part, by means of the micro processor 10. When the instruction of calibrating the analog value is obtained, the controller 3 converts the switch data S2 into the standard value so as to calibrate it, employing an analog value calibration processing program which has been stored in the RAM 12.

As shown in Figs. 2A and 2B, in the header part of the transmit data packet, a protocol identifier which indicates that it is a packet for the controller 3 has been entered. On the other hand, in the data part of the transmit data packet, instructions toward the controller 3, etc. have been entered. The instruction can cause the controller 3 to calibrate the analog value.

In the header part of the receive data packet, an identification number (shown by ID, in the figure) of the controller 3, a data length, and a data response acknowledgment (shown by ACK, in the figure) have been entered.

In the data part of the receive data packet, the current calibrated analog manipulation information, for instance, the switch data which have been calibrated by the controller 3 have been entered.

In this connection, the game machine main frame 2 and the controller 3 are connected with a data transmission signal line TXD for delivering the transmit data from the game machine main frame 2 to the controller 3, and a data transmission signal line RXD for delivering the receive data from the controller 3 to the game machine main frame 2.

In addition, the game machine main frame 2 and the controller 3 are connected with a serial synchronous clock signal line SCK for extracting the data from the data transmission signal lines TXD and RXD, a control line DTR for establishing and breaking communication, and a flow controlling control line DSR for transferring mass data.

On the above construction, the video game machine 1 operates in accordance with the operative procedure shown in Fig. 3. That is, when the user turns on the power supply or performs reset operation, the video game system 1 enters from the start step SP0, and then proceeds to step SP1. At step SP1, the video game system

1 performs initializing, by setting of the communication function, preparing of the buffer area within the RAM 12, setting of the signaling speed of the serial I/O interface port 11, etc., and then proceeds to step SP2.

At the step SP2, the video game system 1 reads the analog value which is represented by the current switch data S2 wherein the joy stick is in the neutral state, and sets this value as the standard value. Thereafter, analog manipulation information which have been converted on the basis of this value are determined as calibrated analog manipulation information which are given to the game machine main frame.

For instance, if the range of the manipulated variable which are given to the game system main frame 2 by the video game system 1 is "0 to 255" in analog values, and the value of the switch data S2 which is converted into analog values is "120", then the analog value "120" is converted into the central analog value "128". The other analog values which are represented with the switch data S2 are similarly processed.

Next, at step SP3, the video game system 1 transfers a transmit data packet containing an instruction from the game machine main frame 2 to the controller 3. Besides, the video game system 1 transfers a receive data packet containing switch data from the controller 3 to the game machine main frame 2, and then proceeds to step SP4.

At step SP4, the video game system 1 examines the data part of the transmit data packet which has been delivered from the game machine main frame 2, and judges whether there is the instruction of calibration of the analog value or not. At step SP4, if a negative result is obtained, then the video game system 1 decides that there should not be the instruction of calibrating the analog value which is owing to the analog switch 5, and proceeds to step SP5.

At the step SP5, the video game system 1 reads plural digital values which are owing to the digital switches 7 and 8, and an analog value which is owing to the analog switch 5. The video game system 1 charges the receive packet data with the read switch data, and then returns to the step SP3 so as to repeat the

aforementioned procedure.

If an affirmative result is obtained at the step SP4, the video game system 1 decides that it has received the instruction of calibrating the analog value which is owing to the analog switch 5, and returns to step SP2 so as to repeat the aforementioned procedure.

In this way, each time the power source is turned on or resetting operation is performed, the instruction of calibrating the analog value is given to the controller 3, so that the analog value which is owing to the analog switch 5 is calibrated. As a result, even though the analog signal S1 which is outputted by the analog switch 5 has drifted due to aged deterioration, etc., correct analog value can be transmitted to the game machine main frame 2. Therefore, the display position on the screen, etc. are always matched with the manipulation of the user.

According to the above construction, the digitized analog value which has been obtained on the basis of the analog signal S1 which has been outputted by the analog switch 5 is calibrated and then the calibrated analog value is transmitted to the game machine main frame 2, by the one chip microcomputer 4 which is included in the controller 3, so that discrepancy between the manipulation of the user and the display position on the screen, etc. can be easily prevented without adding adjusting components after forwarding from the factory.

While in the aforesaid embodiment, the analog controller 2 calibrates the analog value which is owing to the analog switch 5 when the instruction of calibrating the analog value has been given from the game machine main frame 2, however, the present invention is not limited thereto and the controller 3 itself can calibrates the analog value which is owing to the analog switch 5, at the time of, for instance, each turning on of the power source. In this case, the same effects as the above can be also obtained.

While in the aforesaid embodiment, the present invention is applied to the controller 3 which is connected to the game machine main frame 2 which is a build-in CD-ROM drive (not shown) for reproducing a CD-ROM, however, the present invention is not limited thereto and a video game system and a game controller in

which a game is progressed on the basis of reception of the game contents data can be applied, instead of reproducing the game contents from a CD-ROM.

Further, while in the aforesaid embodiment, the game machine main frame 2 and the controller 3 are connected by the data transmission signal lines TXD, RXD and SCK, and the control lines DTR and DSR, however, the present invention is not limited thereto and the game machine main frame 2 and the controller 3 are not connected by signal lines but they can communicate the analog manipulation information, etc. to each other by the use of infrared rays, ultrasonic waves, electronic radio waves, etc.

Furthermore, while in the aforesaid embodiment, the digitized analog value is obtained by the use of the manipulation inputting analog switch 5 and the A/D converter 6, however, the present invention is not limited thereto and the digitized analog manipulation information can be obtained, by arbitrary construction and method, on the basis of analog inputting manipulation by the user.

As described above, according to the present invention, the digitized analog manipulation information which have been obtained from the manipulation information generating means are calibrated by the manipulation information calibrating means provided in the game controller, and then the digitized and calibrated analog manipulation information which have been obtained by calibrating are transmitted to the game processing device; therefore, it is able to realize a video game system and a game controller wherein discrepancy between the manipulation of the user and the display position on the screen, etc. can be easily prevented without adding adjusting components after forwarding them from the factory.

While there has been described in conjunction with the preferred embodiments of the invention, it will be obvious tot hose skilled in the art that various changes and modifications may be aimed, therefore, to cover in the appended claimed all such changes and modifications as fall within the true spirit and scope of the invention.

THE CLAIMS DEFINING THE INVENTION ARE AS FOLLOWS:

1. A video game system including:

game processing means for processing game contents;

and a game controller for performing operations connected with said game contents; wherein

said game controller having:

manipulating information generating means for outputting digitized analog manipulation information, proportional to an analog manipulation input including an analog switch for outputting an analog signal which is proportional to said analog manipulation input, and an analog-to-digital converter, which provides digitized analog manipulation information; and

manipulation information calibrating means for operating said digitized analog manipulation information, thereby producing the digitized calibrated analog manipulation information which is a calibrated form of the analog manipulation information.

2. A video game system as claimed in claim 1, further including:

means for outputting the calibrated analog manipulation information to a game device.

3. The video game system according to claim 1 or 2, wherein said game processing means including means for reproducing a video recording medium on which said game contents have been recorded.

4. The video game system according to claim 1 or 2, wherein said game processing means processes said game contents which have been given from the exterior.

5. The video game system according to claim 1 or 2, wherein said game controller calibrates said analog manipulation information by said manipulation information calibrating means in response to a calibration instruction.

6. The video game system according to any one of claims 1, 2 or 5, wherein said game controller calibrates

AUSTRALIAN PATENT OFFICE

said analog manipulation information by said manipulation information calibrating means, when the power supply is turned on.

7. A game controller, including:

manipulation information generating means for outputting digitized analog manipulation information, proportional to an analog manipulation input;

manipulation information calibrating means for operating said digitized analog manipulation information, thereby producing the digitized calibrated analog manipulation information which is a calibrated form of the analog manipulation information; and

output means for outputting said calibrated analog manipulation information.

8. The game controller according to claim 7, wherein said analog manipulation information is calibrated by said manipulation information calibrating means in response to a calibration instruction.

9. The game controller according to claim 7 or 8, wherein said analog manipulation information is calibrated by said manipulation information calibrating means, when the power supply is turned on.

10. The game controller according to claim 7, wherein:

said manipulation information generating means having an analog switch for outputting an analog signal which is proportional to said analog input manipulation, and an analog-to-digital converter, which provides digitized analog manipulation information.

11. The game controller according to claim 8, wherein said manipulation information calibrating means including:

storing means for storing control information for calibrating said analog manipulation information; and

processing means for operating on said control information according to a calibration instruction.

12. The game controller according to claim 7, wherein said output means including a serial interface for

AUSTRALIAN PATENT OFFICE

transmitting said calibrated analog manipulation information as serial data.

13. The game controller according to claim 12, wherein said output means includes means for packetizing said calibrated analog manipulating information.

14. The game controller according to claim 7 wherein said manipulation information generating means including an interface to which said digitized analog manipulation information obtained from digital manipulation information and analog manipulation input is supplied.

15. A method of calibrating an electronic game including the steps:

generating an analog signal representative of an analog position of a game controller by manipulating an analog switch to produce a manipulation input and outputting an analog signal from said analog switch which is proportional to said manipulation input;

converting the analog signal to a first digital signal; and correlating the first digital signal with a known portion of the game controller to provide a second digital signal which is a calibrated signal representing an actual portion of the game controller.

16. A video game system, substantially as herein described with reference to the accompanying drawings.

17. A game controller, substantially as herein described with reference to the accompanying drawings.

18. A method of calibrating an electronic game, substantially as herein described with reference to the accompanying drawings.

Dated this 29th day of AUGUST 2000

SONY COMPUTER ENTERTAINMENT INC.

By their Patent Attorneys

GRIFFITH HACK

Fellows Institute of Patent and

Trade Mark Attorneys of Australia

AUSTRALIAN PATENT OFFICE

64222/96

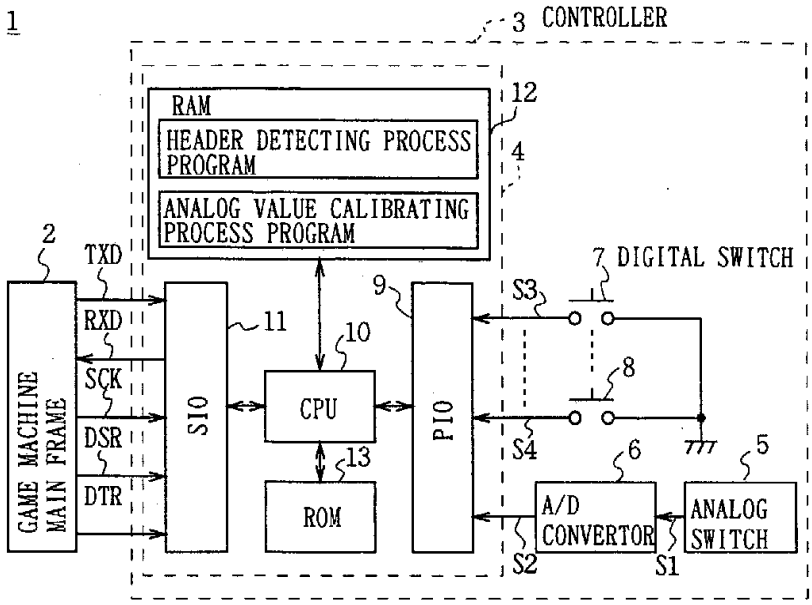

FIG. 1

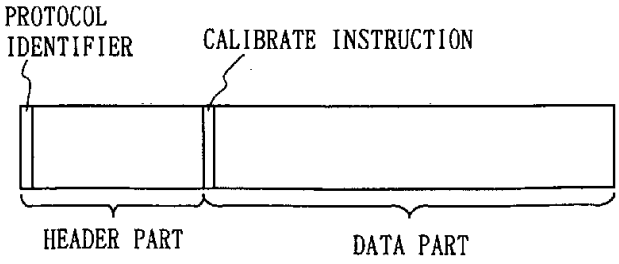

FIG. 2A

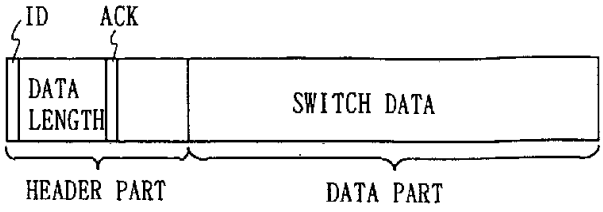

FIG. 2B

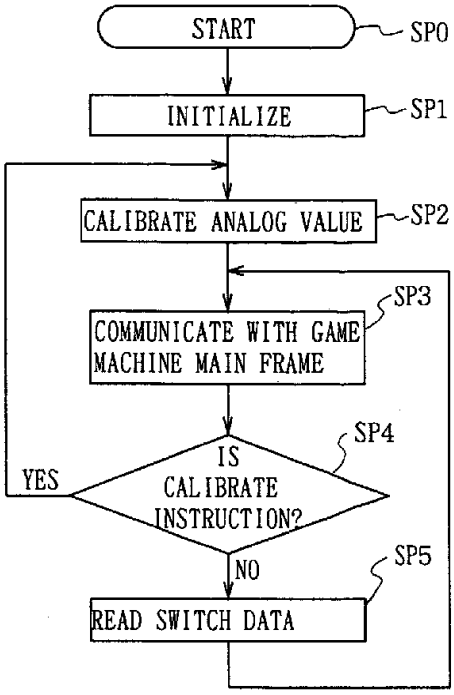
START
SP0
INITIALIZE
SP1
CALIBRATE ANALOG VALUE
SP2
SP3
COMMUNICATE WITH GAME MACHINE MAIN FRAME
SP4
IS CALIBRATE INSTRUCTION?
YES
NO
SP5
READ SWITCH DATA

FIG. 3